Volume

1

DSQ 85-00305

INSTRUMENT LOOP DIAGRAMS

PILOT PLANT ELECTRONIC INSTRUMENTATION SYSTEM

PHASE 1 TASK 1

DSS FILE NO. 03SQ-23440-5-9182

Submitted to

SUPPLY AND SERVICES CANADA/ENERGY MINES AND RESOURCES

SEPTEMBER 1986

Monenco Consultants Limited
One St. Paul Street
St. Catharines, Ontario
L2R 7J9

DSS 8279-3

MICROMEDIA

Monenco

Monenco Consultants Limited
One St. Paul Street, St. Catharines, Ontario

September 26, 1986
File: DSS 8279-3

Energy, Mines and Resources
CANMET, Engineering Research Laboratories
555 Booth Street
Ottawa, Ontario
K1A 0G1

Attention: Mr. J. D. Chase
Research Scientist

Dear Mr. Chase,

RE: Pilot Plant PP3 Instrumentation Phase 1
DSS File No. 03SQ-23440-5-9182
Monenco Ref. DSS 8279-3

We are pleased to submit the final report for Phase 1 of this project. Volume 1 contains Instrument Loop Diagrams for Task 1. Volume II contains Instrument Panel Drawings for Task 2. This completes Monenco work under this contract for Phase 1.

Yours truly,

W. Piersol, P. Eng.
Project Manager

WP/ij
Encl.

cc: Ms. Gaetane Dagenais, DSS
Mr. R. P. West, Monenco
Mr. R. L. Bell, Monenco

EXECUTIVE SUMMARY

Phase 1 engineering has involved the production of connection diagrams for 520 instrument loops from Piping and Instrument Diagrams for the Heavy Oil Coprocessing Pilot Plant (PP3) at EMR's Bell's Corners Complex.

Phase 1 has also involved the design of associated instrument panels including panel layout and panel wiring diagrams in sufficient detail to allow mechanical and electrical construction of each panel. Cable groupings and junction box design are included in the engineering.

This documentation is provided in two volumes of this Final Report.

Ce projet compris le dessin et le preparation de documentation technique pour les systemes d'instrumentation à l'usine experimental PP3 à Bells' Corners. Ce rapport technique inclus des dessins schematiques pour 520 montages en boucle s d'instrumentation et les dessins et documentation pour construire des panneaux de contrôles. Il y a aussi des dessins pour faire des boîtes de jonction et des diagrammes de bloc pour le cablage.

Monenco
September 1986

	DRAWING No.	TITLE
VOLUME 1	204300	LIST OF THERMOCOUPLE LOOPS - WITH ON/OFF TEMPERATURE CONTROLLERS
	204301	LIST OF THERMOCOUPLE LOOPS - WITH PID TEMPERATURE CONTROLLERS
	204302	LIST OF THERMOCOUPLE LOOPS - ANALOG INPUT ONLY
	204303	LIST OF PRESSURE TRANSDUCER CABINET LOOPS
	204304	LIST OF HAND SWITCH LOOPS
	204305	LIST OF FLOW CONTROLLER LOOPS
	204306	LIST OF LIQUID LEVEL CONTROLLER, WEIGHT SCALE & MISCELLANEOUS LOOPS
	204307	LIST OF SPEED CONTROLLER LOOPS
	204308	CABLE BLOCK DIAGRAM
VOLUME 2	204498	INSTRUMENT CONTROL PANEL A1
	204491	INSTRUMENT CONTROL PANEL A2
	204475	INSTRUMENT CONTROL PANEL C
	204458	INSTRUMENT CONTROL PANEL D
	204434	INSTRUMENT CONTROL PANEL S

NOTES:

REV	DATE	DESCRIPTION	CHK	MEC APP	EMR APP
00	86.09	PH.1 FINAL	CP	HBP	

Energy, Mines and Resources Canada / Énergie, Mines et Ressources Canada

LIST OF DRAWINGS

EMR COPROCESSING PILOT PLANT PP3

DRAWN | CAD | DATE 86.07.03
CHKD | REV 00
DESIGN

Monenco Consultants Limited | WORK ORDER No. DSS 8279-3 | REG. No. 204309

100P

THERMOCOUPLE LOOPS - WITH ON/OFF TEMPERATURE CONTROLLERS

LOOP NUMBER	REGISTRATION NUMBER	LOOP NUMBER	REGISTRATION NUMBER	LOOP NUMBER	REGISTRATION NUMBER
01-T-4004	204000	03-T-4112	204196	11-T-4001	204218
01-T-4005	204001	03-T-4113	204197	11-T-4002	204219
01-T-4006	204002	03-T-4114	204198	11-T-4003	204220
01-T-4007	204003	03-T-4115	204199	11-T-4004	204221
01-T-4008	204004	03-T-4116	204200	11-T-4005	204222
01-T-4010	204006	03-T-4116/A	204201	11-T-4006	204223
01-T-4015	204007	03-T-4117	204202		
01-T-4016	204008	03-T-4117/A	204179		
01-T-4017	204009	03-T-4118	204203		
01-T-4018	204010	03-T-4118/A	204204		
01-T-4019	204011	03-T-4119	204205		
01-T-4021	204013	03-T-4119/A	204206		
01-T-4023	204014	03-T-4135	204207		
01-T-4024	204015	03-T-4136	204208		
01-T-4025	204016	03-T-4137	204209		
01-T-4026	204017	03-T-4138	204210		
01-T-4032	204018	03-T-4139	204211		
01-T-4033	204019	03-T-4140	204212		
01-T-4034	204020	03-T-4141	204213		
01-T-4035	204021	03-T-4142	204214		
01-T-4027	203947				
01-T-4028	203948	04-T-4002	203991		
01-T-4029	203946	04-T-4011	203951		
01-T-4030	203949	04-T-4012	203952		
01-T-4031	203950	04-T-4013	203953		
		04-T-4014	203954		
02-T-4001	203967	04-T-4015	203955		
02-T-4002	203962	04-T-4016	203956		
02-T-4015	203968	04-T-4017	203957		
02-T-4016	203986	04-T-4018	203958		
		04-T-4019	203959		
03-T-4145	204180	04-T-4020	203960		
03-T-4146	204181	04-T-4021	203961		
03-T-4147	204182				
03-T-4148	204183	05-T-4005	204215		
03-T-4149	204184				
03-T-4150	204185	06-T-4001	204216		
03-T-4151	204186				
03-T-4152	204187	07-T-4001	204217		
03-T-4153	204188				
03-T-4154	204189	08-T-4001	203996		
03-T-4155	204190	08-T-4002	203997		
03-T-4156	204191				
03-T-4108	204192				
03-T-4109	204193				
03-T-4110	204194				
03-T-4111	204195				

NOTES:

SHIELDING, GROUNDING, CONDUCTOR IDENTIFICATION:

1. MULTICORE TX WIRE TO HAVE INDIVIDUAL PAIR SHIELDS. ALL OTHER SIGNALS UNSHIELDED.
2. ENSURE SHIELD CONTINUITY FROM SOURCE TO RECEIVER THROUGH INTERMEDIATE TERMINALS.
3. GROUND SHIELD AT INSTRUMENT PANEL ONLY. JUMPER ALL SHIELDS PER LOOP. IF RECEIVER AND SOURCE ARE IN FIELD, GROUND SHIELD AT SOURCE INSTRUMENT.
4. INTERNAL WIRING IN PANELS NOT TO BE SHIELDED.
5. ALL OUTER CASES OF INSTRUMENT CASES TO BE GROUNDED.
6. CONDUCTOR IDENTIFICATION:

   a) SIGNAL WIRE - CABLE NUMBER TO USE TAG No. OF SOURCE INSTRUMENT PLUS SERIAL No.-1, -2, etc.

   b) TX WIRE - USE SIGNAL WIRE DESIGNATION FOR CABLE No. AND PAIR No.

SYMBOLS:

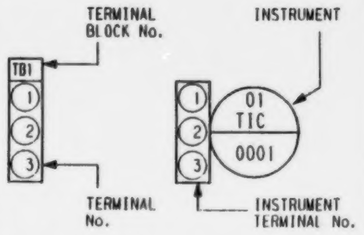

SEE PID, INSTRUMENT SYMBOL SHEET D-3-01-MP-2 FOR INSTRUMENT SYMBOL IDENTIFICATION PER ISA S51.1.

REV	DATE	DESCRIPTION	CHK	MEC APP	EMR APP
02	86.09	PH.1 FINAL			
01	86.07.29	ADDED 03-T-4117/A - DELETED 05-T-4001	RAW		
00	86.07.14	FOR EMR APPROVAL	KPW		✓

Energy, Mines and Resources Canada — Énergie, Mines et Ressources Canada

LIST OF THERMOCOUPLE LOOPS - WITH ON/OFF TEMPERATURE CONTROLLERS

INSTRUMENT LOOP DIAGRAM COVER SHEET

EMR COPROCESSING PILOT PLANT PP3

DRAWN | CAD | DATE 86.07.03
CHKD | REV 02
DESIGN

Monenco Consultants Limited | WORK ORDER No. DSS 8279-3 | REG. No. 204300

LOOP

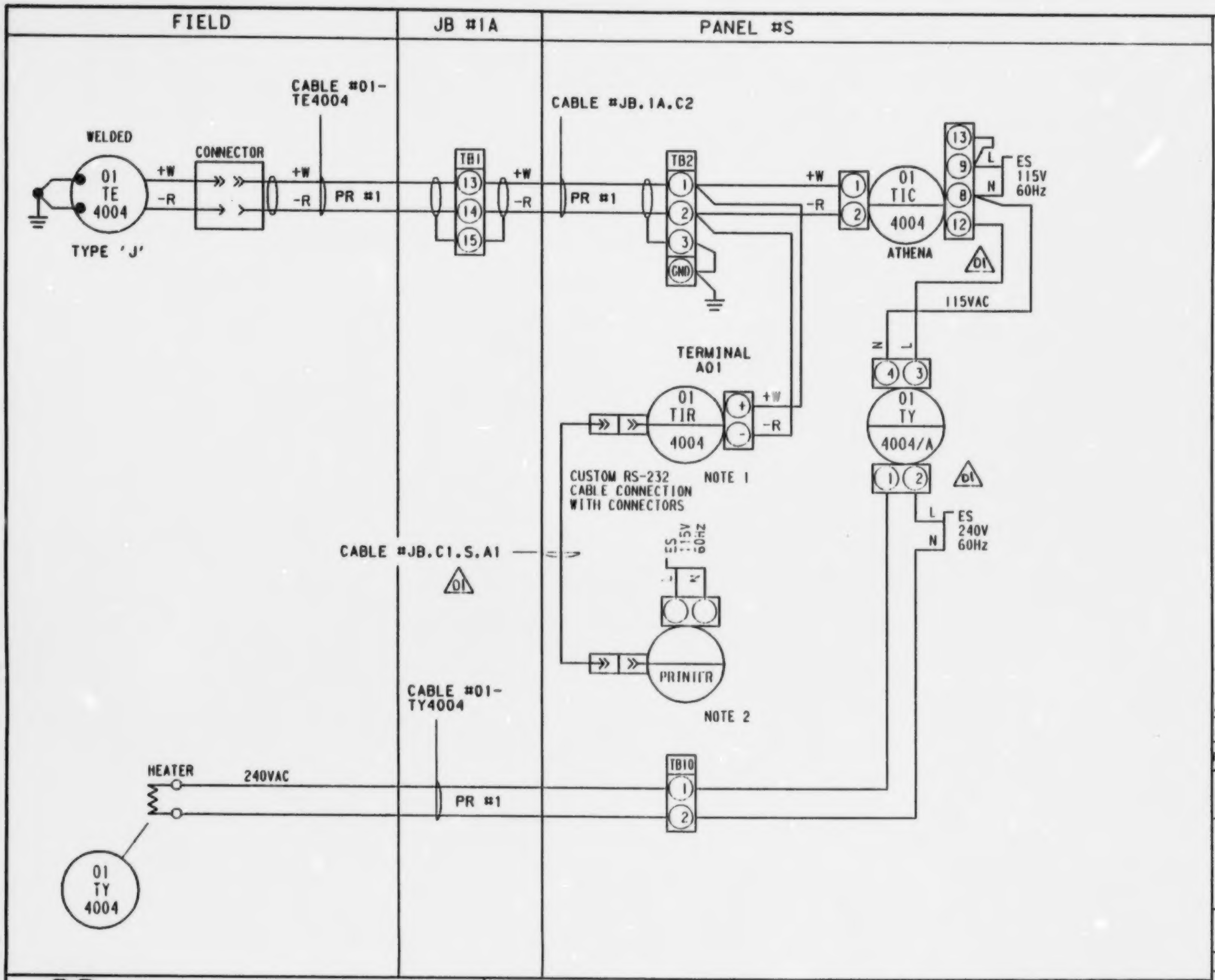

NOTES:

1. DIGI-LINK 4, WITH RS-232 OUTPUT TO EPSON FX-85 PRINTER IN MAIN CONTROL PANEL (A.1).
2. LOCATED IN MAIN CONTROL PANEL.

GENERAL NOTES:

A. 24 VAC Power Supply from GFC, Hammond Series Power Supply in panel.

B. 4-20mA signals to computer are shunted by EMR with a resistor to provide voltage signal to computer card.

C. Compatibility of voltage signals to computer programmed by EMR.

REV	DATE	DESCRIPTION	CHK	MEC APP	EMR APP
02	86.09	PH.1 FINAL	CP	WAS	
01	86.08.7	TERMINAL #3 CHANGED CABLE # ADDED	RPW		
00	86.07.14	for EMR APPROVAL	RPW		✓

Energy, Mines and Resources Canada — Énergie, Mines et Ressources Canada

LOOP DIAGRAM
01-T-4004
AREA 1
SLURRY FEED SYSTEM

EMR COPROCESSING PILOT PLANT
PP3

PID No.	D-3-1 -MP-1	
DRAWN	CAD	DATE 86.05.15
CHKD		REV 02
DESIGN		

Monenco Consultants Limited — WORK ORDER No. DSS 8279-3 — REG. No. 204000

LOOP2

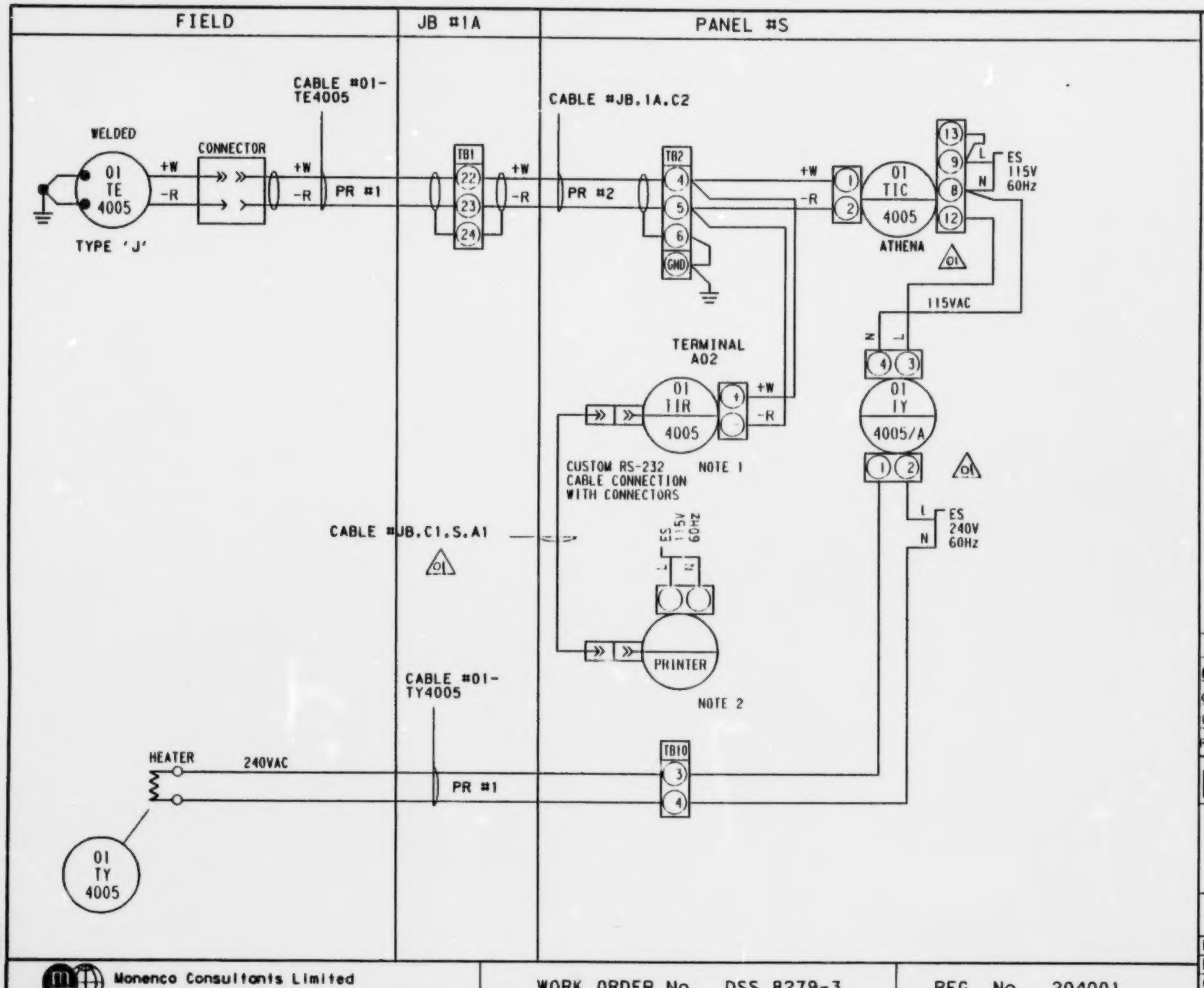

NOTES:
1. DIGI-LINK 4, WITH RS-232 OUTPUT TO EPSON FX-85 PRINTER IN MAIN CONTROL PANEL (A.1).
2. LOCATED IN MAIN CONTROL PANEL.

GENERAL NOTES:

A. 24 VAC Power Supply from GFC, Hammond Series Power Supply in panel.

B. 4-20mA signals to computer are shunted by EMR with a resistor to provide voltage signal to computer card.

C. Compatibility of voltage signals to computer programmed by EMR.

REV	DATE	DESCRIPTION	CHK	MEC APP	EMR APP
02	86.09	PH.1 FINAL			
01	86.08.7	TERMINAL #S CHANGED CABLE # ADDED			
00	86.07.1	FOR EMR APPROVAL			✓

Energy, Mines and Resources Canada — Énergie, Mines et Ressources Canada

LOOP DIAGRAM
01-T-4005
AREA 1
SLURRY FEED SYSTEM

EMR COPROCESSING PILOT PLANT
PP3

PID No. D-3-1 -MP-1
DRAWN | CAD | DATE
CHKD
DESIGN
REV 02

Monenco Consultants Limited — WORK ORDER No. DSS 8279-3 — REG. No. 204001

LOOP2

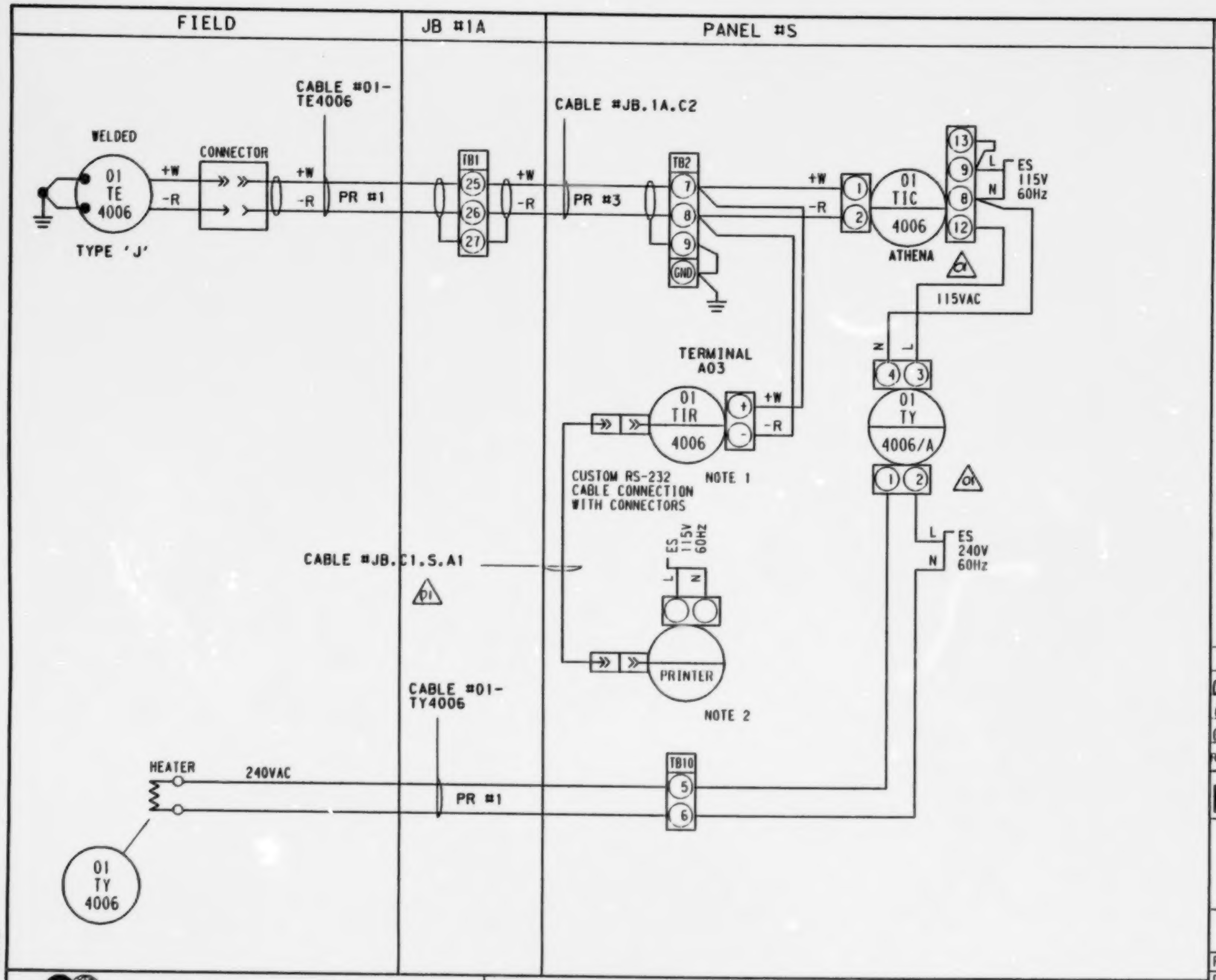

NOTES:

1. DIGI-LINK 4, WITH RS-232 OUTPUT TO EPSON FX-85 PRINTER IN MAIN CONTROL PANEL (A.1).
2. LOCATED IN MAIN CONTROL PANEL.

GENERAL NOTES:

A. 24 VAC Power Supply from GFC, Hammond Series Power Supply in panel.

B. 4-20mA signals to computer are shunted by EMR with a resistor to provide voltage signal to computer card.

C. Compatibility of voltage signals to computer programmed by EMR.

REV	DATE	DESCRIPTION	CHK	MEC APP	EMR APP
02	86.09	PH.1 FINAL	cl	WAS	
01	86.08.7	TERMINAL #'S CHANGED CABLE # ADDED	RPW		
00	86.07.14	FOR EMR APPROVAL	RPW		✓

Energy, Mines and Resources Canada — Énergie, Mines et Ressources Canada

LOOP DIAGRAM
01-T-4006
AREA 1
SLURRY FEED SYSTEM

EMR COPROCESSING PILOT PLANT
PP3

PID No. D-3-1 -MP-1
DRAWN | CAD | DATE
CHKD
DESIGN
REV 02

Monenco Consultants Limited

WORK ORDER No. DSS 8279-3

REG. No. 204002

LOOP2

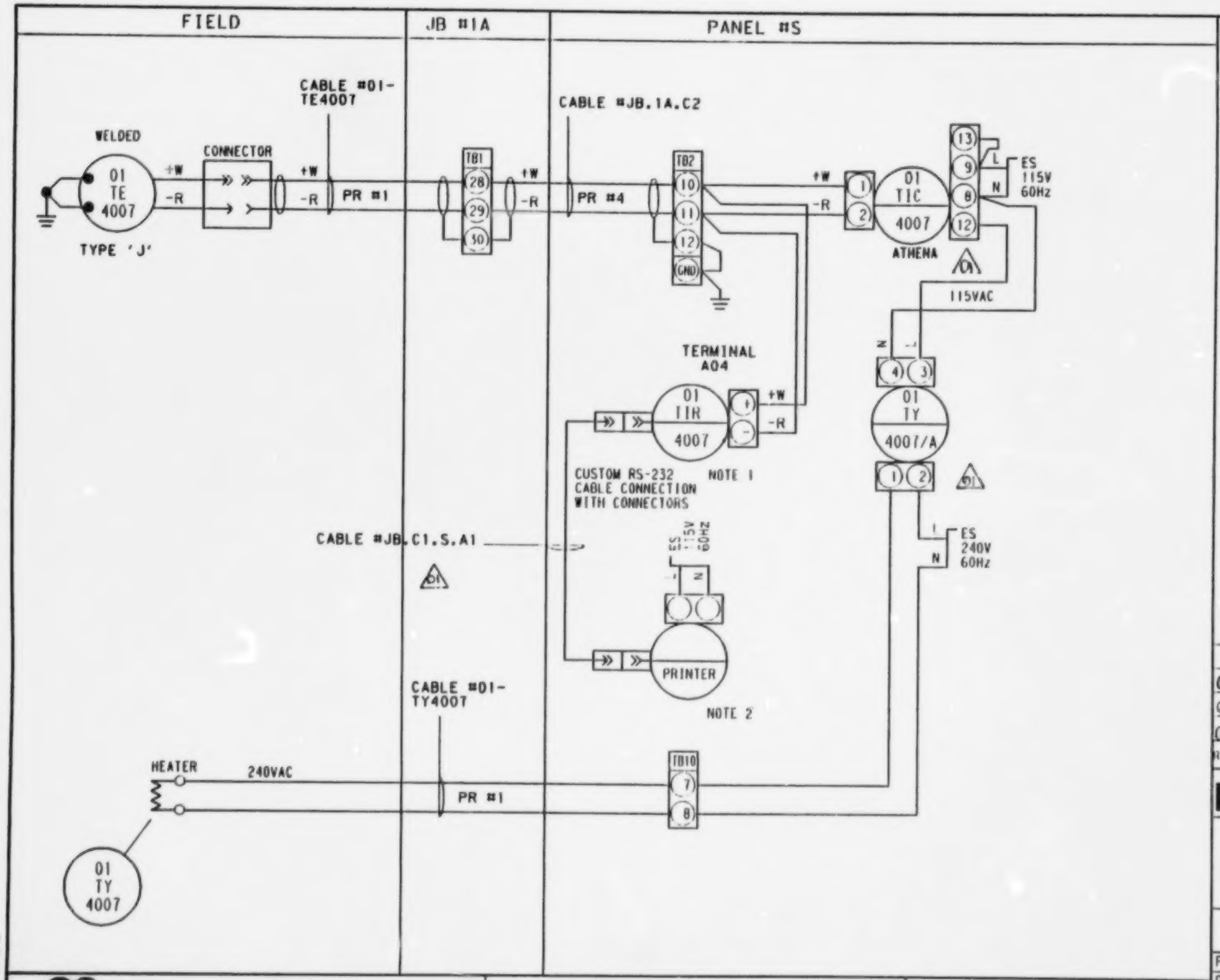

NOTES:

1. DIGI LINK 4, WITH RS-232 OUTPUT TO EPSON FX-85 PRINTER IN MAIN CONTROL PANEL (A.1).
2. LOCATED IN MAIN CONTROL PANEL.

GENERAL NOTES:

A. 24 VAC Power Supply from GFC, Hammond Series Power Supply in panel.

B. 4-20mA signals to computer are shunted by EMR with a resistor to provide voltage signal to computer card.

C. Compatibility of voltage signals to computer programmed by EMR.

REV	DATE	DESCRIPTION	CHK	MEC APP	EMR APP
02	86.09	PM.4 FINAL	CP	WAC	
01	86.08.7	TERMINAL #'S CHANGED CABLE # ADDED	RPJ		
0	86.07.14	FOR EMR APPROVAL	RPJ		✓

Energy, Mines and Resources Canada — Énergie, Mines et Ressources Canada

LOOP DIAGRAM
01-T-4007
AREA 1
SLURRY FEED SYSTEM

EMR COPROCESSING PILOT PLANT PP3

PID No. D-3-1 -MP-1
DRAWN CAD DATE
CHKD
DESIGN
REV 02

Monenco Consultants Limited — WORK ORDER No. DSS 8279-3 — REG. No. 204003

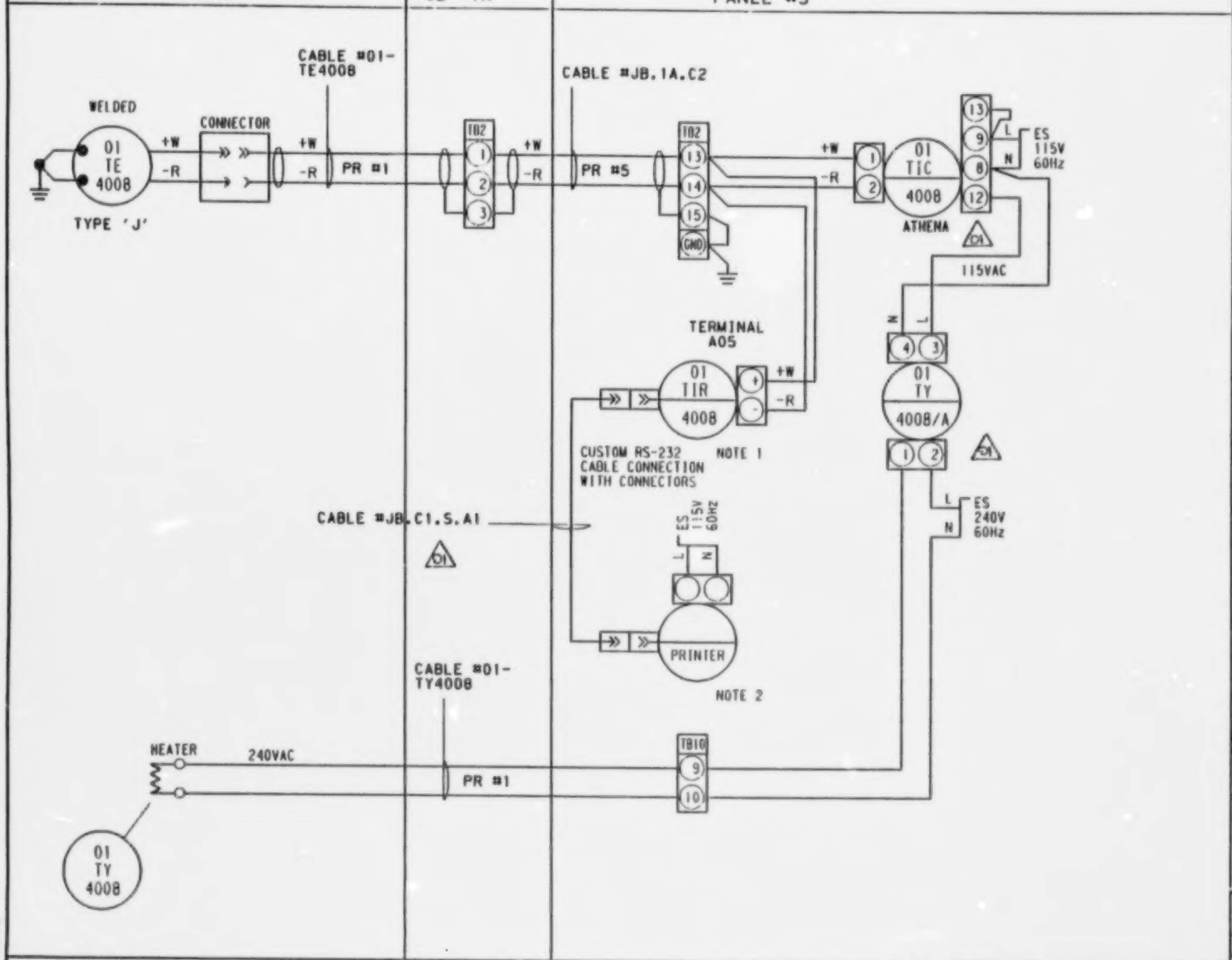

NOTES:

1. DIGI-LINK 4, WITH RS-232 OUTPUT TO EPSON FX 85 PRINTER IN MAIN CONTROL PANEL (A.1).
2. LOCATED IN MAIN CONTROL PANEL.

GENERAL NOTES:

A. 24 VAC Power Supply from GFC, Hammond Series Power Supply in panel.

B. 4-20mA signals to computer are shunted by EMR with a resistor to provide voltage signal to computer card.

C. Compatibility of voltage signals to computer programmed by EMR.

REV	DATE	DESCRIPTION	CHK	MEC APP	EMR APP
02	86.09	PH.4 FINAL			
01	86.08.7	TERMINAL #S CHANGED CABLE E ADDED	RPW		
00	86.07.14	FOR EMR APPROVAL	RPW		✓

Energy, Mines and Resources Canada — Énergie, Mines et Ressources Canada

LOOP DIAGRAM
01-T-4008
AREA 1
SLURRY FEED SYSTEM

EMR COPROCESSING PILOT PLANT
PP3

PID No. D-3-1 -MP-1
DRAWN | CAD | DATE
CHKD
DESIGN
REV 2

Monenco Consultants Limited | WORK ORDER No. DSS 8279-3 | REG. No. 204004

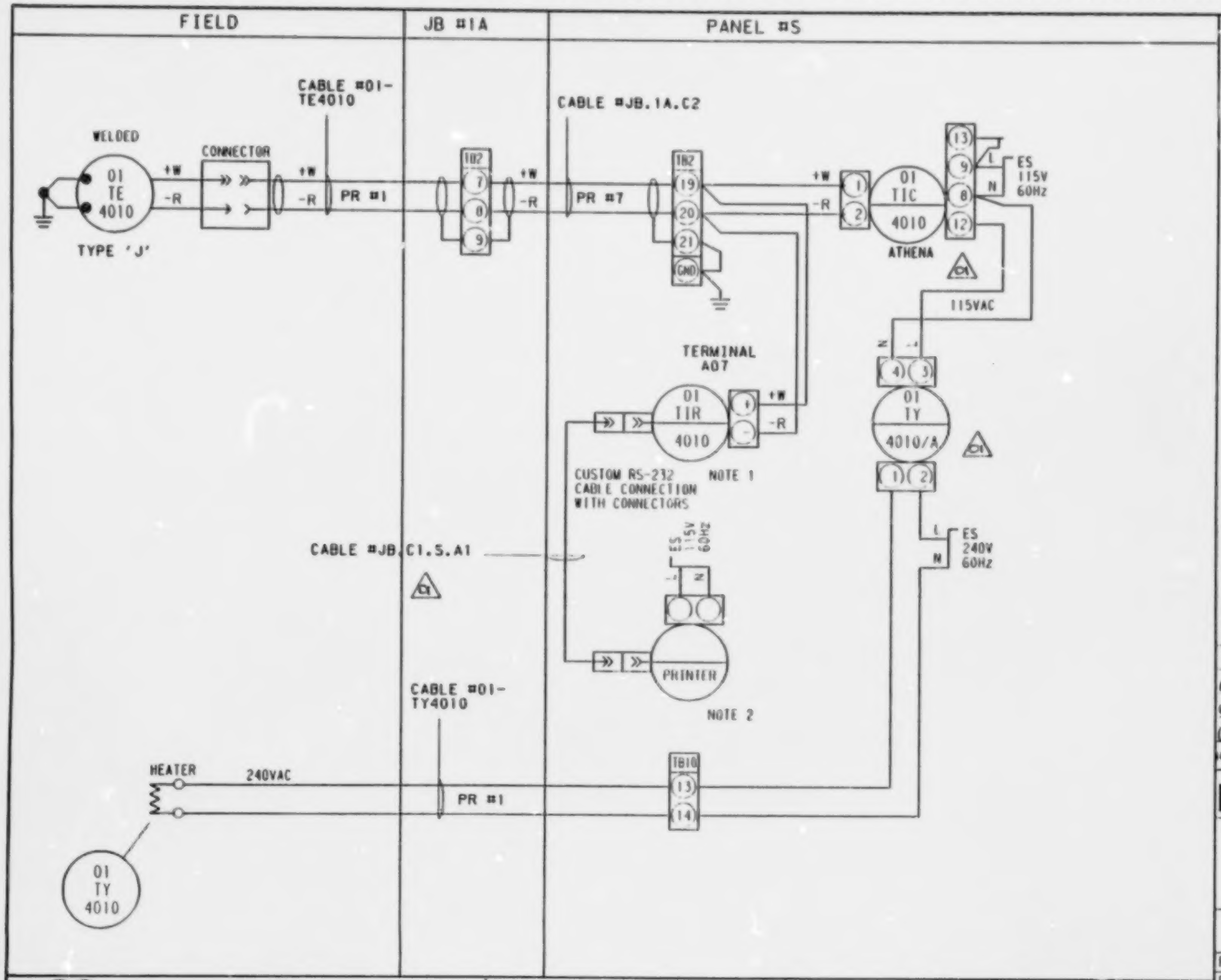

NOTES:
1. DIGI-LINK 4, WITH RS-232 OUTPUT TO EPSON FX-85 PRINTER IN MAIN CONTROL PANEL (A.1).
2. LOCATED IN MAIN CONTROL PANEL.

GENERAL NOTES:

A. 24 VAC Power Supply from GFC, Hammond Series Power Supply in panel.

B. 4-20mA signals to computer are shunted by EMR with a resistor to provide voltage signal to computer card.

C. Compatibility of voltage signals to computer programmed by EMR.

REV	DATE	DESCRIPTION	CHK	MEC APP	EMR APP
02	86.09	PH.1 FINAL	eP	WAP	
01	86.08.7	TERMINAL #'S CHANGED CABLE # ADDED	RW		
00	86.07.14	FOR EMR APPROVAL	KPW		✓

Energy, Mines and Resources Canada — Énergie, Mines et Ressources Canada

LOOP DIAGRAM
01-T-4010
AREA 1
SLURRY FEED SYSTEM

EMR COPROCESSING PILOT PLANT
PP3

PID No. D-3-1 -MP-1
DRAWN CAD DATE
CHKD
DESIGN

Monenco Consultants Limited | WORK ORDER No. DSS 8279-3 | REG. No. 204006

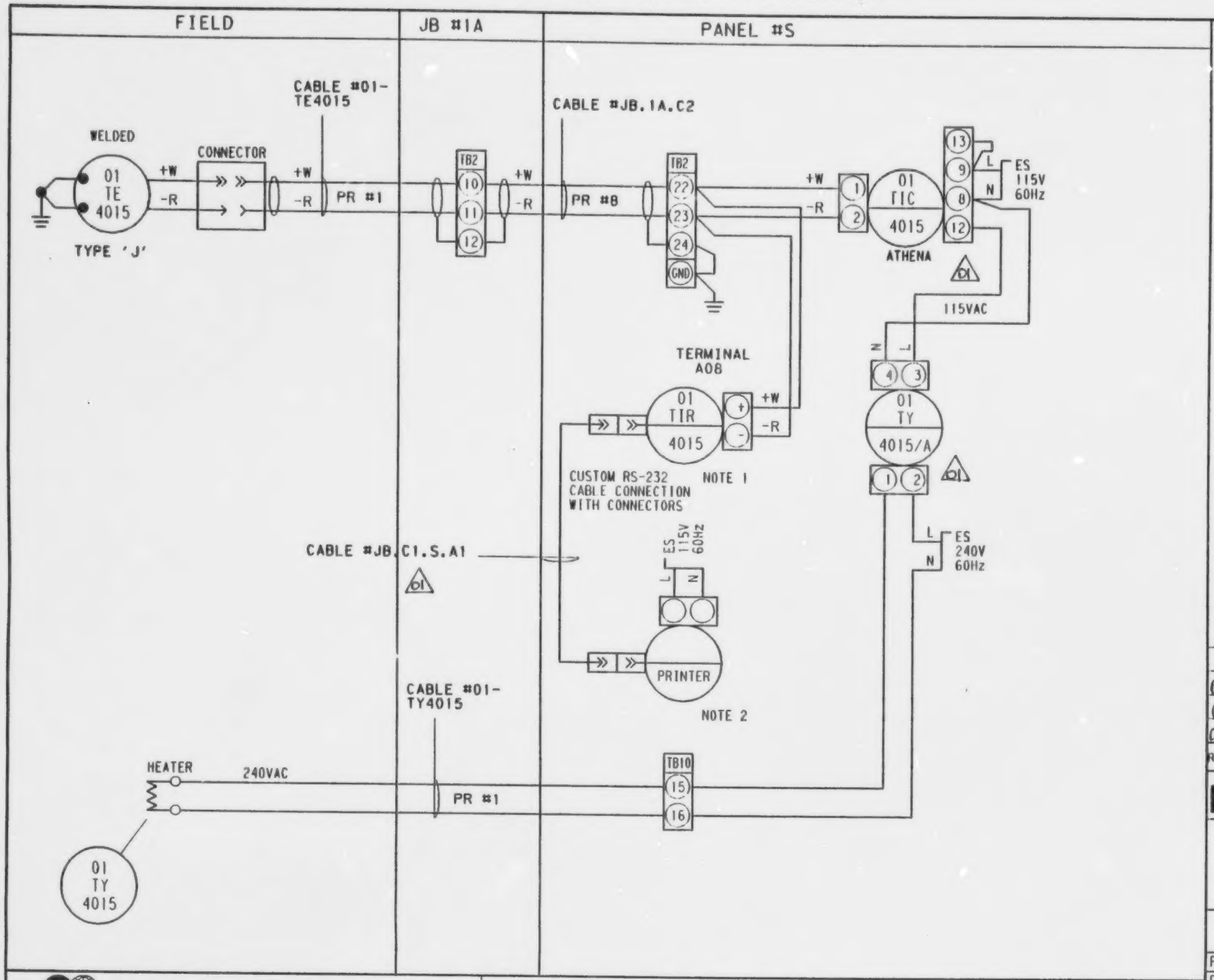

NOTES:
1. DIGI-LINK 4, WITH RS-232 OUTPUT TO EPSON FX-85 PRINTER IN MAIN CONTROL PANEL (A.1).
2. LOCATED IN MAIN CONTROL PANEL.

GENERAL NOTES:

A. 24 VAC Power Supply from GFC, Hammond Series Power Supply in panel.

B. 4-20mA signals to computer are shunted by EMR with a resistor to provide voltage signal to computer card.

C. Compatibility of voltage signals to computer programmed by EMR.

REV	DATE	DESCRIPTION	CHK	MEC APP	EMR APP
02	86.09	PH.1 FINAL	CP	WAP	
01	86.08.7	TERMINAL #'s CHANGED CABLE # ADDED	RW		
00	86.07.14	FOR EMR APPROVAL	RPW		✓

Energy, Mines and Resources Canada — Énergie, Mines et Ressources Canada

LOOP DIAGRAM
01-T-4015
AREA 1
SLURRY FEED SYSTEM

EMR COPROCESSING PILOT PLANT PP3

PID No. D-3-1 -MP-1
DRAWN — CAD — DATE
CHKD
DESIGN
REV 02

Monenco Consultants Limited — WORK ORDER No. DSS 8279-3 — REG. No. 204007

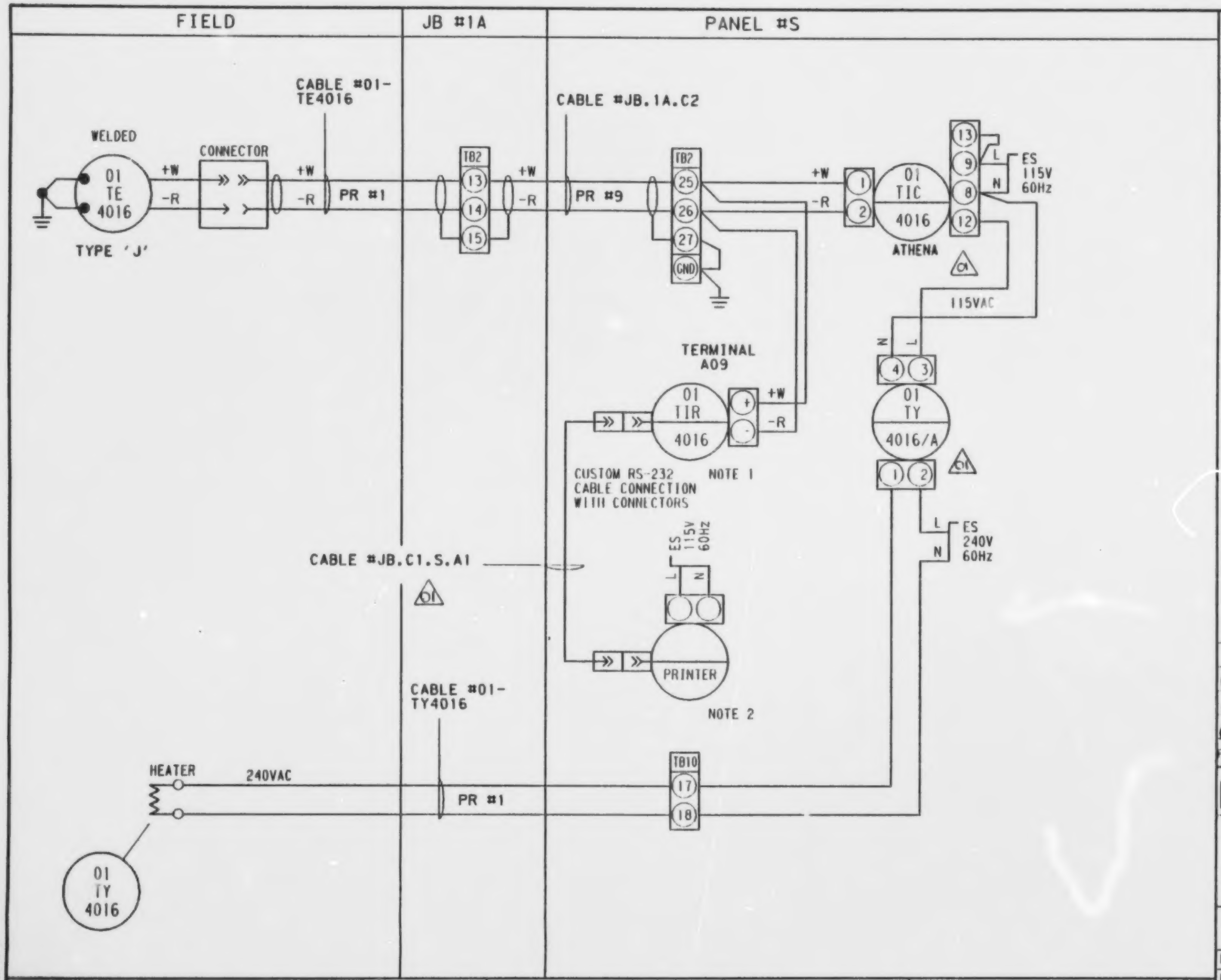

NOTES:
1. DIGI-LINK 4, WITH RS-232 OUTPUT TO EPSON FX-85 PRINTER IN MAIN CONTROL PANEL (A.1).
2. LOCATED IN MAIN CONTROL PANEL.

GENERAL NOTES:

A. 24 VAC Power Supply from GFC, Hammond Series Power Supply in panel.

B. 4-20mA signals to computer are shunted by EMR with a resistor to provide voltage signal to computer card.

C. Compatibility of voltage signals to computer programmed by EMR.

REV	DATE	DESCRIPTION	CHK	MEC APP	EMR APP
02	86.09	PH.1 FINAL	CP	AR	
01	86.08.7	TERMINAL #'S CHANGED CABLE # ADDED	RW		
00	86.07.14	FOR EMR APPROVAL	RAW		

Energy, Mines and Resources Canada — Énergie, Mines et Ressources Canada

LOOP DIAGRAM
01-T-4016
AREA 1
SLURRY FEED SYSTEM

EMR COPROCESSING PILOT PLANT
PP3

PID No. D-3-1 -MP-1
DRAWN CAD DATE
CHKD
DESIGN
REV 02

Monenco Consultants Limited — WORK ORDER No. DSS 8279-3 — REG. No. 204008

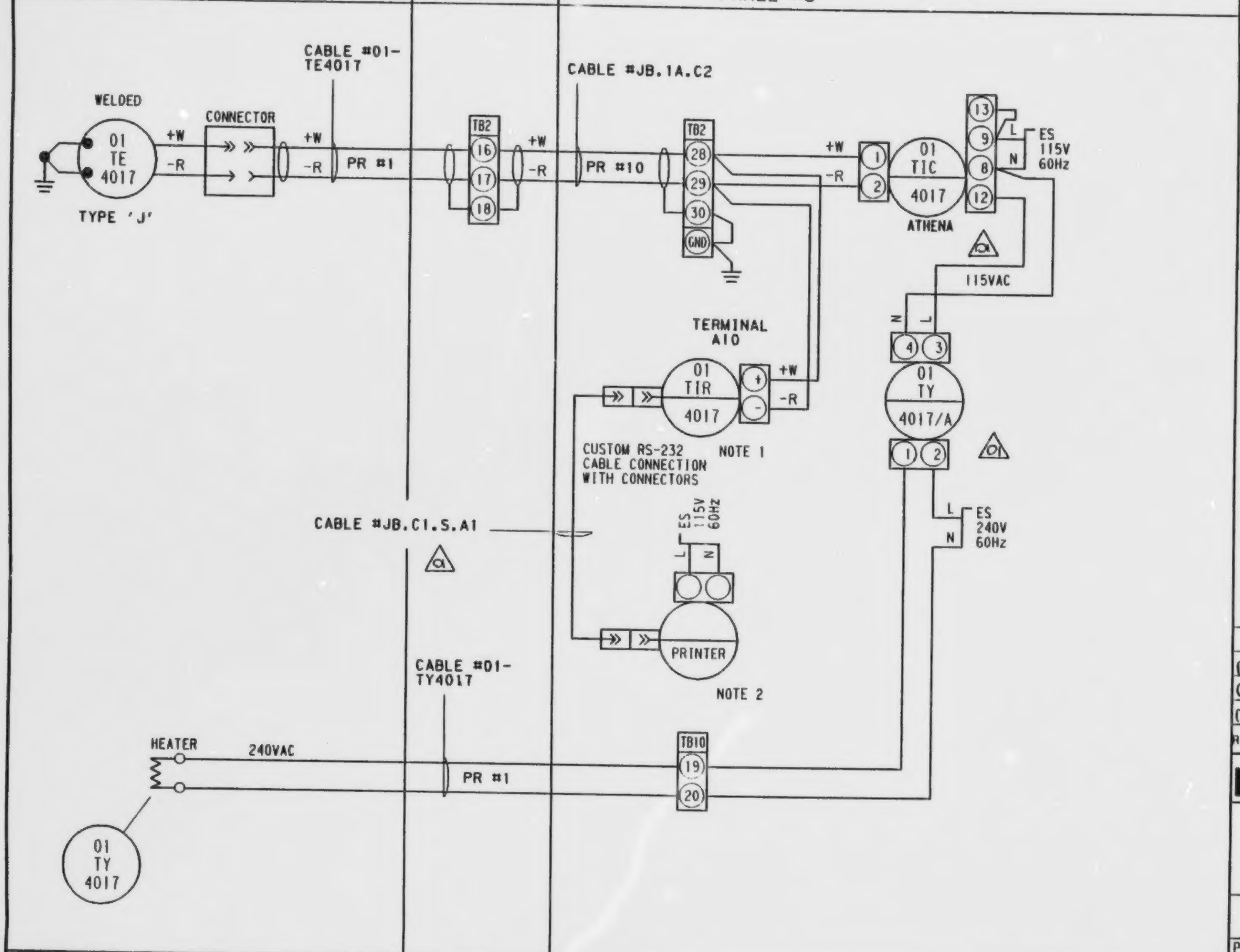

NOTES:
1. DIGI-LINK 4, WITH RS-232 OUTPUT TO EPSON FX-85 PRINTER IN MAIN CONTROL PANEL (A.1).
2. LOCATED IN MAIN CONTROL PANEL.

GENERAL NOTES:

A. 24 VAC Power Supply from GFC, Hammond Series Power Supply in panel.

B. 4-20mA signals to computer are shunted by EMR with a resistor to provide voltage signal to computer card.

C. Compatibility of voltage signals to computer programmed by EMR.

REV	DATE	DESCRIPTION	CHK	MEC APP	EMR APP
02	86.09	PH.1 FINAL	LP	WR	
01	86.08.7	TERMINAL #'S CHANGED CABLE # ADDED	RAW		
00	86.07.14	FOR EMR APPROVAL	RAW		✓

Energy, Mines and Resources Canada / Énergie, Mines et Ressources Canada

LOOP DIAGRAM
01-T-4017
AREA 1
SLURRY FEED SYSTEM

EMR COPROCESSING PILOT PLANT PP3

PID No. D-3-1 -MP-1
DRAWN | CAD | DATE
CHKD
DESIGN
REV 02

Monenco Consultants Limited | WORK ORDER No. DSS 8279-3 | REG. No. 204009

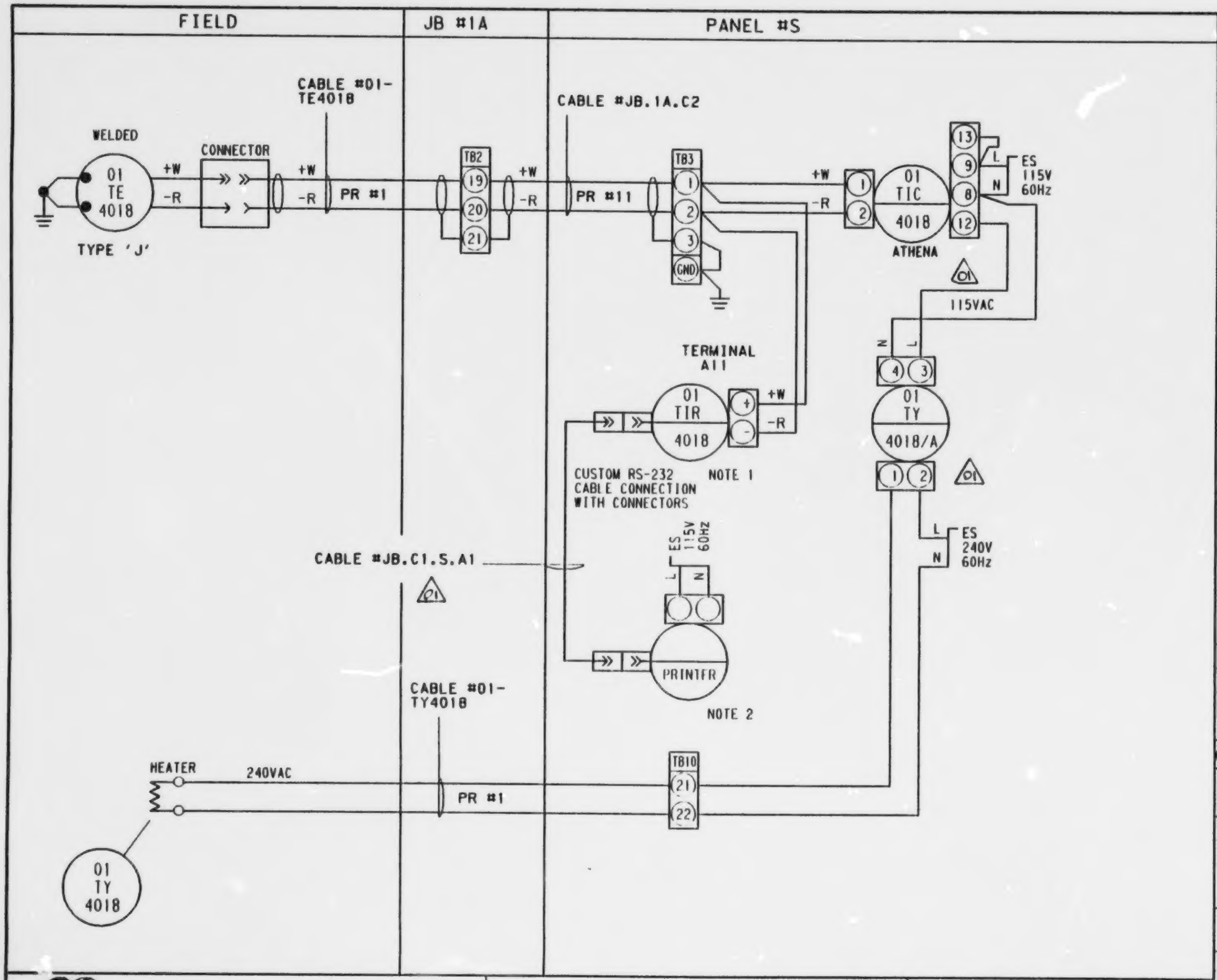

NOTES:
1. DIGI-LINK 4, WITH RS-232 OUTPUT TO EPSON FX-85 PRINTER IN MAIN CONTROL PANEL (A.1).
2. LOCATED IN MAIN CONTROL PANEL.

GENERAL NOTES:

A. 24 VAC Power Supply from GFC, Hammond Series Power Supply in panel.

B. 4-20mA signals to computer are shunted by EMR with a resistor to provide voltage signal to computer card.

C. Compatibility of voltage signals to computer programmed by EMR.

REV	DATE	DESCRIPTION	CHK	MEC APP	EMR APP
02	86.09	PH.1 FINAL	CP	WKS?	
01	86.08.7	TERMINAL #'s CHANGED CABLE # ADDED	RPW		
0	86.07.14	FOR EMR APPROVAL	RPW		✓

Energy, Mines and Resources Canada — Energie, Mines et Ressources Canada

LOOP DIAGRAM
01-T-4018
AREA 1
SLURRY FEED SYSTEM

EMR COPROCESSING PILOT PLANT
PP3

PID No. D-3-1 -MP-1
DRAWN CAD DATE
CHKD
DESIGN
REV 02

Monenco Consultants Limited

WORK ORDER No. DSS 8279-3

REG. No. 204010

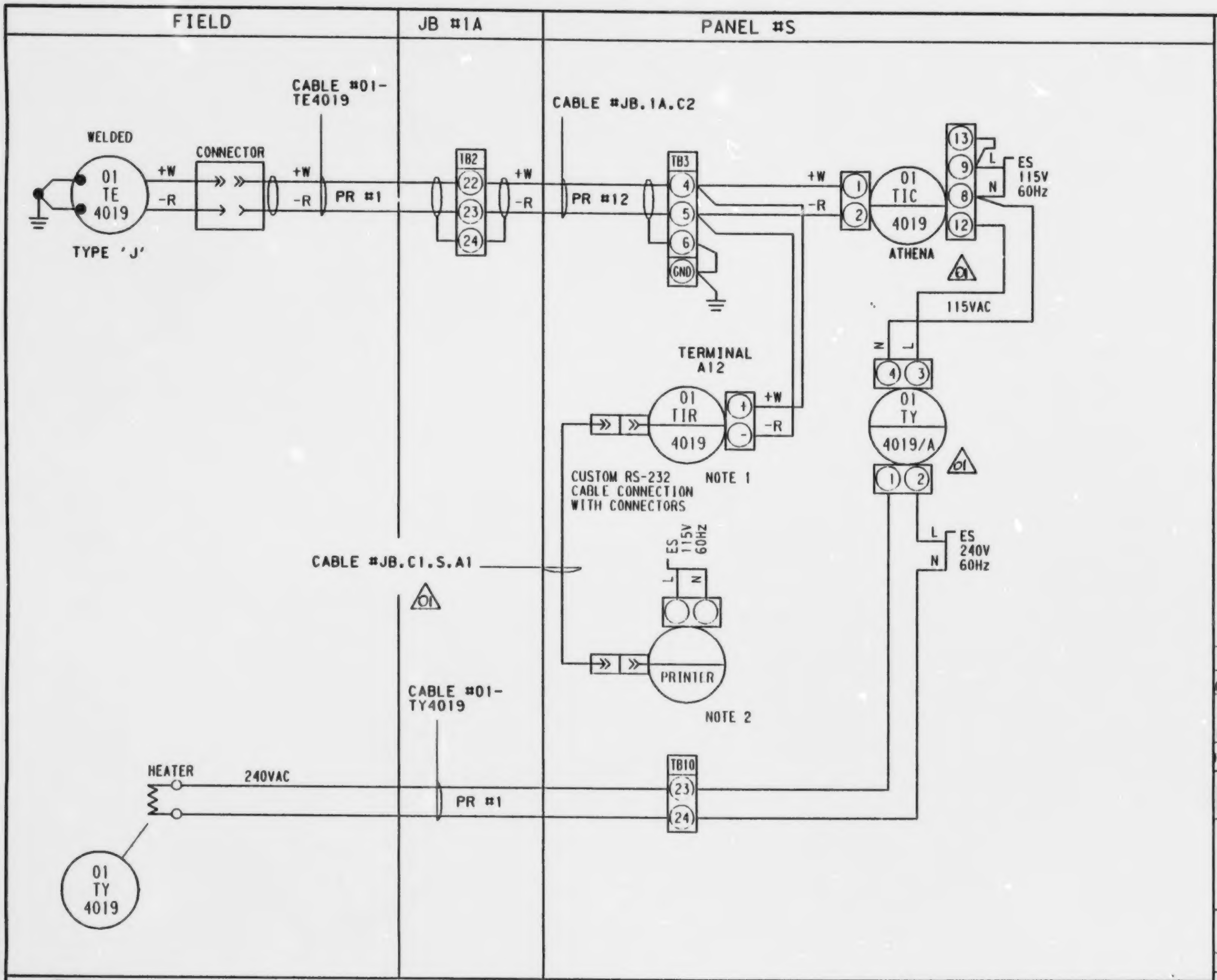

NOTES:

1. DIGI-LINK 4, WITH RS-232 OUTPUT TO EPSON FX-85 PRINTER IN MAIN CONTROL PANEL (A.1).
2. LOCATED IN MAIN CONTROL PANEL.

GENERAL NOTES:

A. 24 VAC Power Supply from GFC, Hammond Series Power Supply in panel.

B. 4-20mA signals to computer are shunted by EMR with a resistor to provide voltage signal to computer card.

C. Compatibility of voltage signals to computer programmed by EMR.

REV	DATE	DESCRIPTION	CHK	MEC APP	EMR APP
02	86.09	PI1.1 FINAL	CP	WAG	
01	86.08.7	TERMINAL #S CHANGED CABLE # ADDED	RPW		
00	85.07.14	FOR EMR APPROVAL	RPW		✓

Energy, Mines and Resources Canada — Énergie, Mines et Ressources Canada

LOOP DIAGRAM
01-T-4019
AREA 1
SLURRY FEED SYSTEM

EMR COPROCESSING PILOT PLANT PP3

PID No. D-3-1 -MP-1
DRAWN | CAD | DATE
CHKD
DESIGN
REV 2

Monenco Consultants Limited | WORK ORDER No. DSS 8279-3 | REG. No. 204011

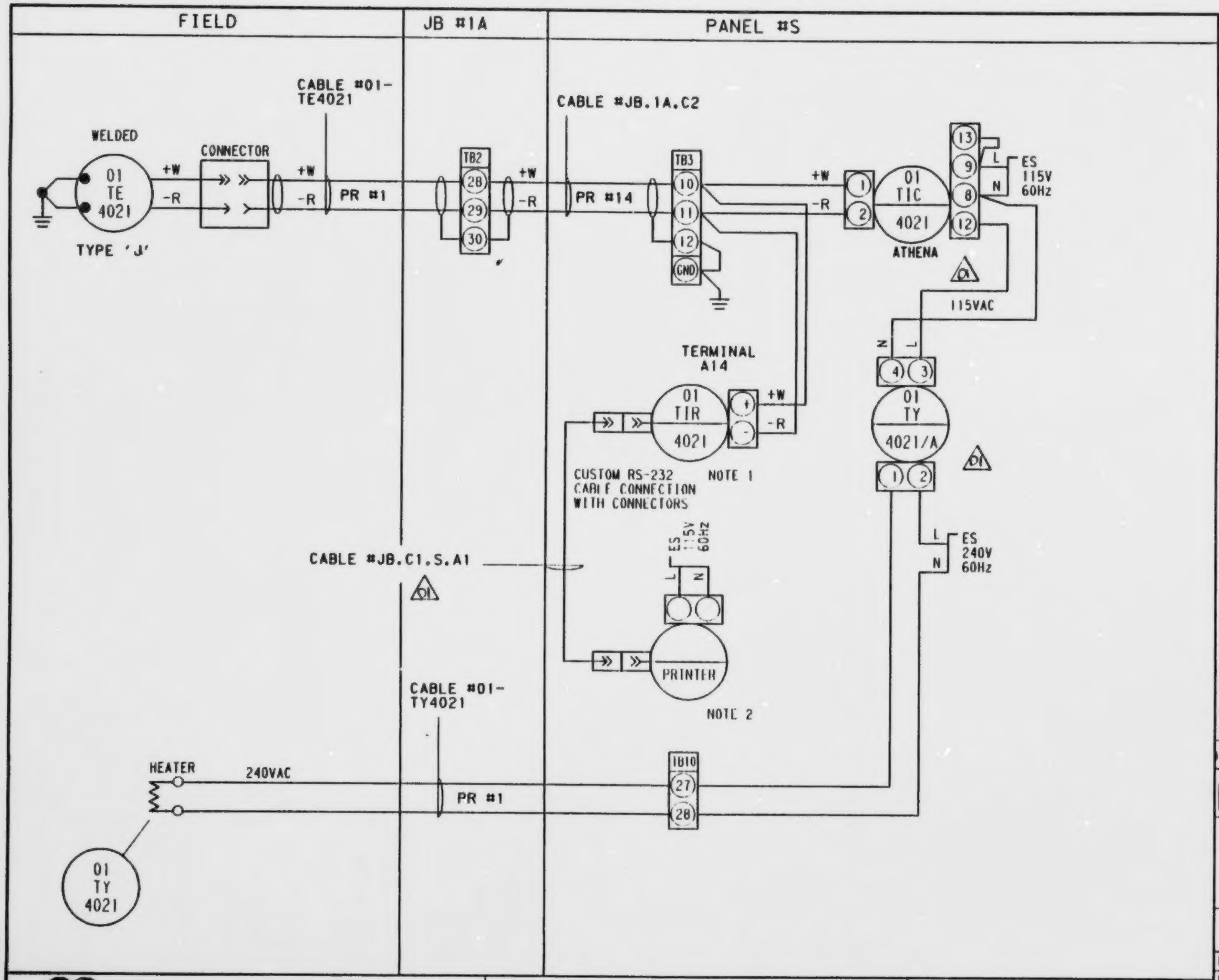

NOTES:

1. DIGI-LINK 4, WITH RS-232 OUTPUT TO EPSON FX-85 PRINTER IN MAIN CONTROL PANEL (A.1).
2. LOCATED IN MAIN CONTROL PANEL.

GENERAL NOTES:

A. 24 VAC Power Supply from GFC, Hammond Series Power Supply in panel.

B. 4-20mA signals to computer are shunted by EMR with a resistor to provide voltage signal to computer card.

C. Compatibility of voltage signals to computer programmed by EMR.

REV	DATE	DESCRIPTION	CHK	MEC APP	EMR APP
02	86.09	PH.1 FINAL			
01	86.08.?	TERMINAL #S CHANGED CABLE # ADDED	RPW		
00	86.07.14	FOR EMR APPROVAL	RPW		✓

Energy, Mines and Resources Canada — Énergie, Mines et Ressources Canada

LOOP DIAGRAM
01-T-4021
AREA 1
SLURRY FEED SYSTEM

EMR COPROCESSING PILOT PLANT PP3

PID No. D-3-1 -MP-1
DRAWN CAD | DATE
CHKD
DESIGN
REV 02

Monenco Consultants Limited | WORK ORDER No. DSS 8279-3 | REG. No. 204013

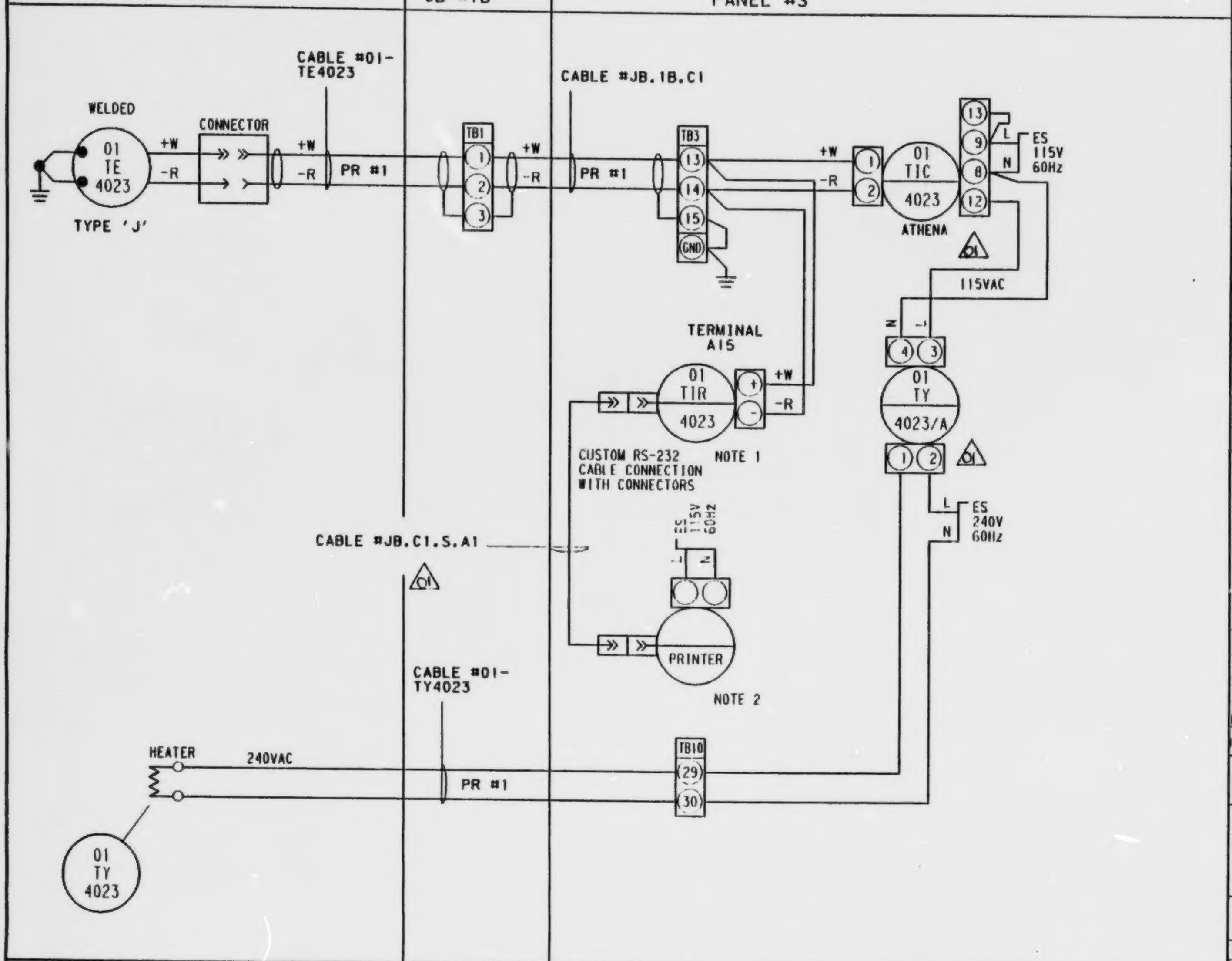

NOTES:

1. DIGI-LINK 4, WITH RS-232 OUTPUT TO EPSON FX-85 PRINTER IN MAIN CONTROL PANEL (A.1).
2. LOCATED IN MAIN CONTROL PANEL.

GENERAL NOTES:

A. 24 VAC Power Supply from GFC, Hammond Series Power Supply in panel.

B. 4-20mA signals to computer are shunted by EMR with a resistor to provide voltage signal to computer card.

C. Compatibility of voltage signals to computer programmed by EMR.

REV	DATE	DESCRIPTION	CHK	MEC APP	EMR APP
02	86.09	PH.1 FINAL	CP	MC	
01	86.08.7	TERMINAL #'S CHANGED CABLE # ADDED	RW		
00	86.07.14	FOR EMR APPROVAL	RPW		✓

Energy, Mines and Resources Canada / Énergie, Mines et Ressources Canada

LOOP DIAGRAM
01-T-4023
AREA 1
SLURRY FEED SYSTEM

EMR COPROCESSING PILOT PLANT
PP3

PID No. D-3-1 -MP-1
DRAWN | CAD | DATE
CHKD
DESIGN
REV 02

Monenco Consultants Limited | WORK ORDER No. DSS 8279-3 | REG. No. 204014

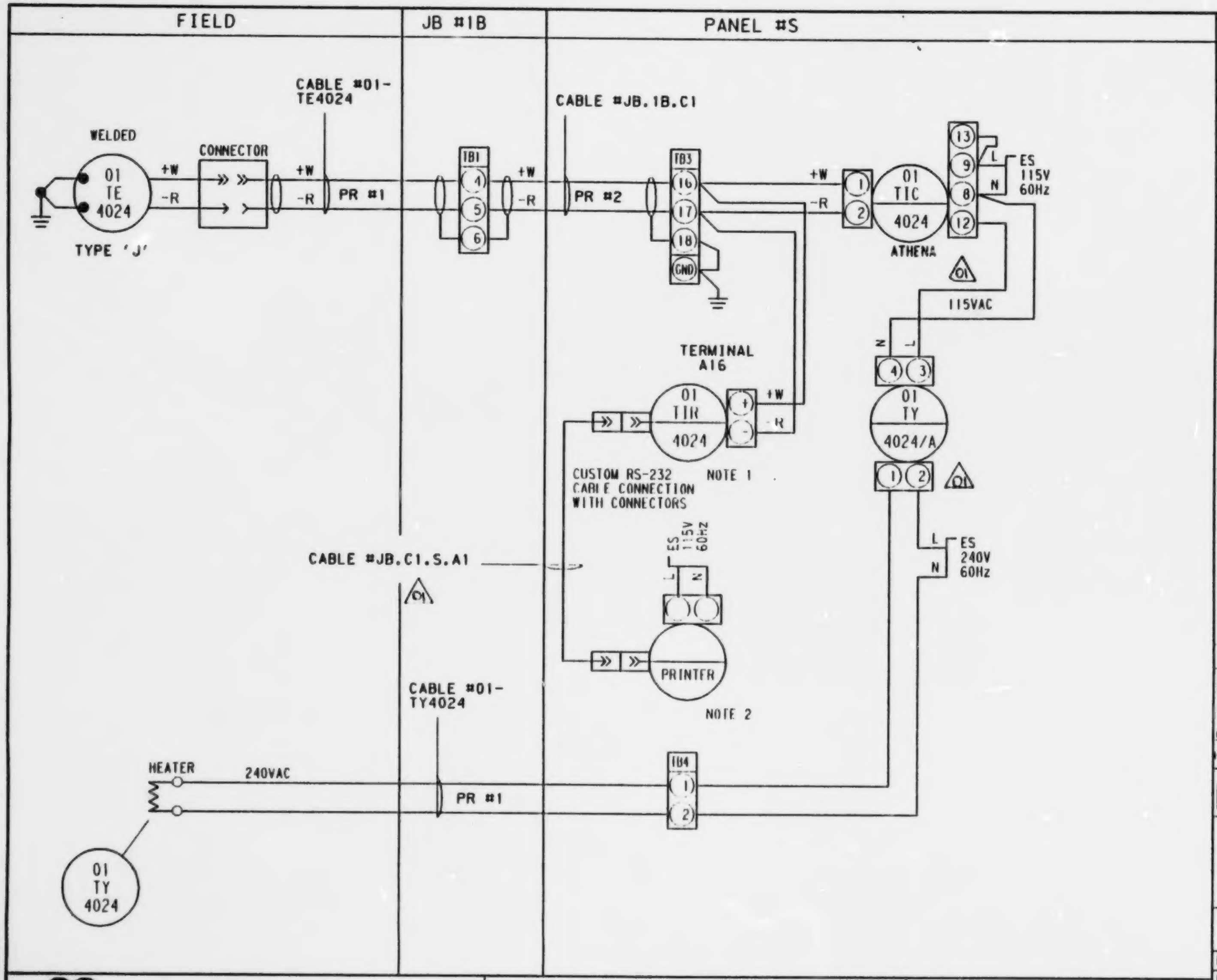

NOTES:

1. DIGI-LINK 4, WITH RS-232 OUTPUT TO EPSON FX-85 PRINTER IN MAIN CONTROL PANEL (A.1).
2. LOCATED IN MAIN CONTROL PANEL.

GENERAL NOTES:

A. 24 VAC Power Supply from GFC, Hammond Series Power Supply in panel.

B. 4-20mA signals to computer are shunted by EMR with a resistor to provide voltage signal to computer card.

C. Compatibility of voltage signals to computer programmed by EMR.

REV	DATE	DESCRIPTION	CHK	MEC APP	EMR APP
02	86.09	PH.1 FINAL			
01	86.08.7	TERMINAL #'S CHANGED CABLE # ADDED			
00	86.07.14	for EMR APPROVAL			✓

Energy, Mines and Resources Canada / Énergie, Mines et Ressources Canada

LOOP DIAGRAM
01-T-4024
AREA 1
SLURRY FEED SYSTEM

EMR COPROCESSING PILOT PLANT PP3

PID No. D-3-1 -MP-1
DRAWN | CAD | DATE
CHKD
DESIGN
REV 02

Monenco Consultants Limited | WORK ORDER No. DSS 8279-3 | REG. No. 204015

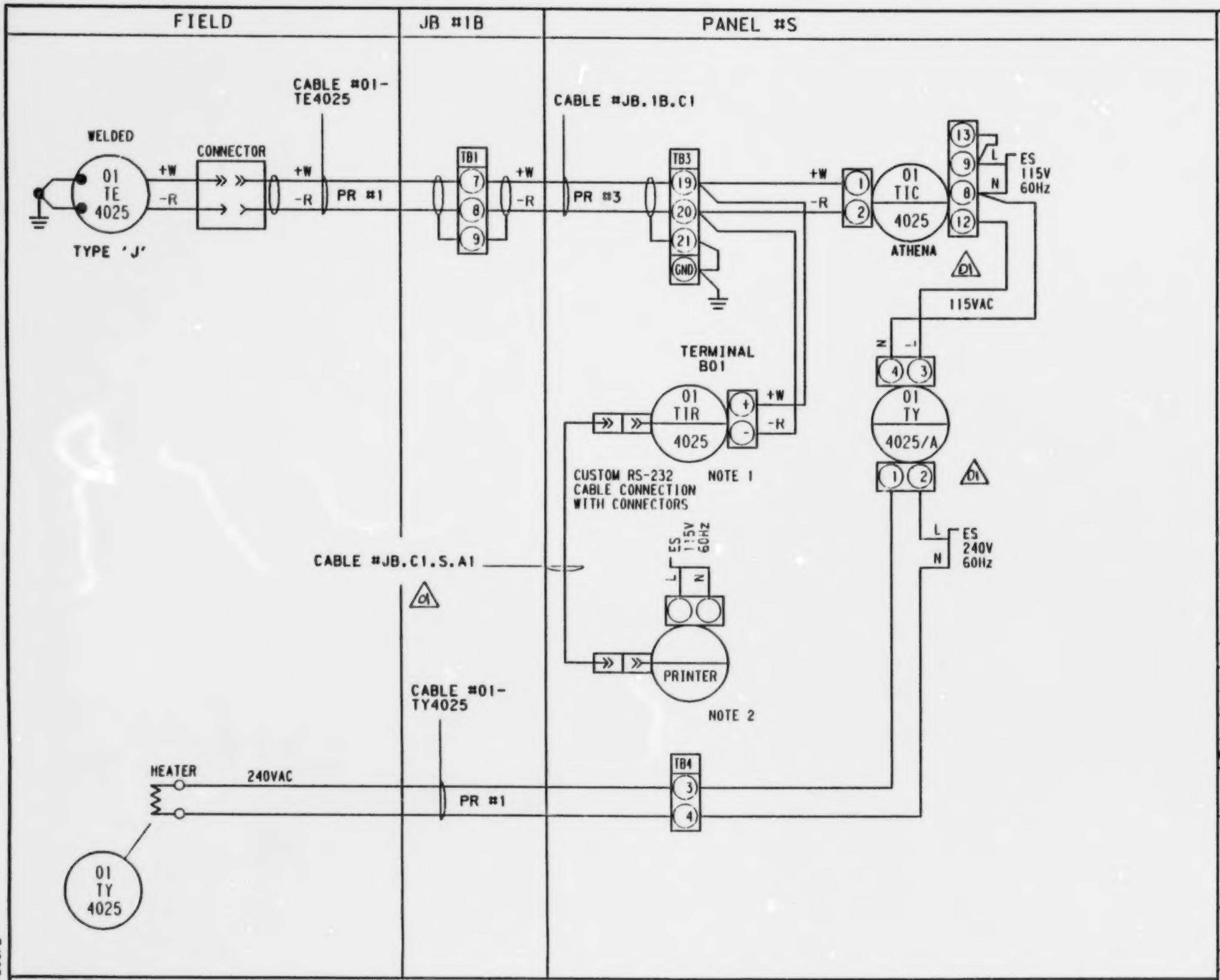

NOTES:
1. DIGI-LINK 4, WITH RS-232 OUTPUT TO EPSON FX-85 PRINTER IN MAIN CONTROL PANEL (A.1).
2. LOCATED IN MAIN CONTROL PANEL.

GENERAL NOTES:

A. 24 VAC Power Supply from GFC, Hammond Series Power Supply in panel.

B. 4-20mA signals to computer are shunted by EMR with a resistor to provide voltage signal to computer card.

C. Compatibility of voltage signals to computer programmed by EMR.

REV	DATE	DESCRIPTION	CHK	MEC APP	EMR APP
02	86.09	PH.1 FINAL	CP	[illegible]	
01	86.08.7	TERMINAL #3 CHANGED CABLE # ADDED	RPW		
00	86.07.14	FOR EMR APPROVAL	WW		✓

Energy, Mines and Resources Canada — Énergie, Mines et Ressources Canada

LOOP DIAGRAM
01-T-4025
AREA 1
SLURRY FEED SYSTEM

EMR COPROCESSING PILOT PLANT PP3

PID No. D-3-1 -MP-1
DRAWN | CAD | DATE
CHKD
DESIGN
REV 2

Monenco Consultants Limited

WORK ORDER No. DSS 8279-3

REG. No. 204016

LOOP2

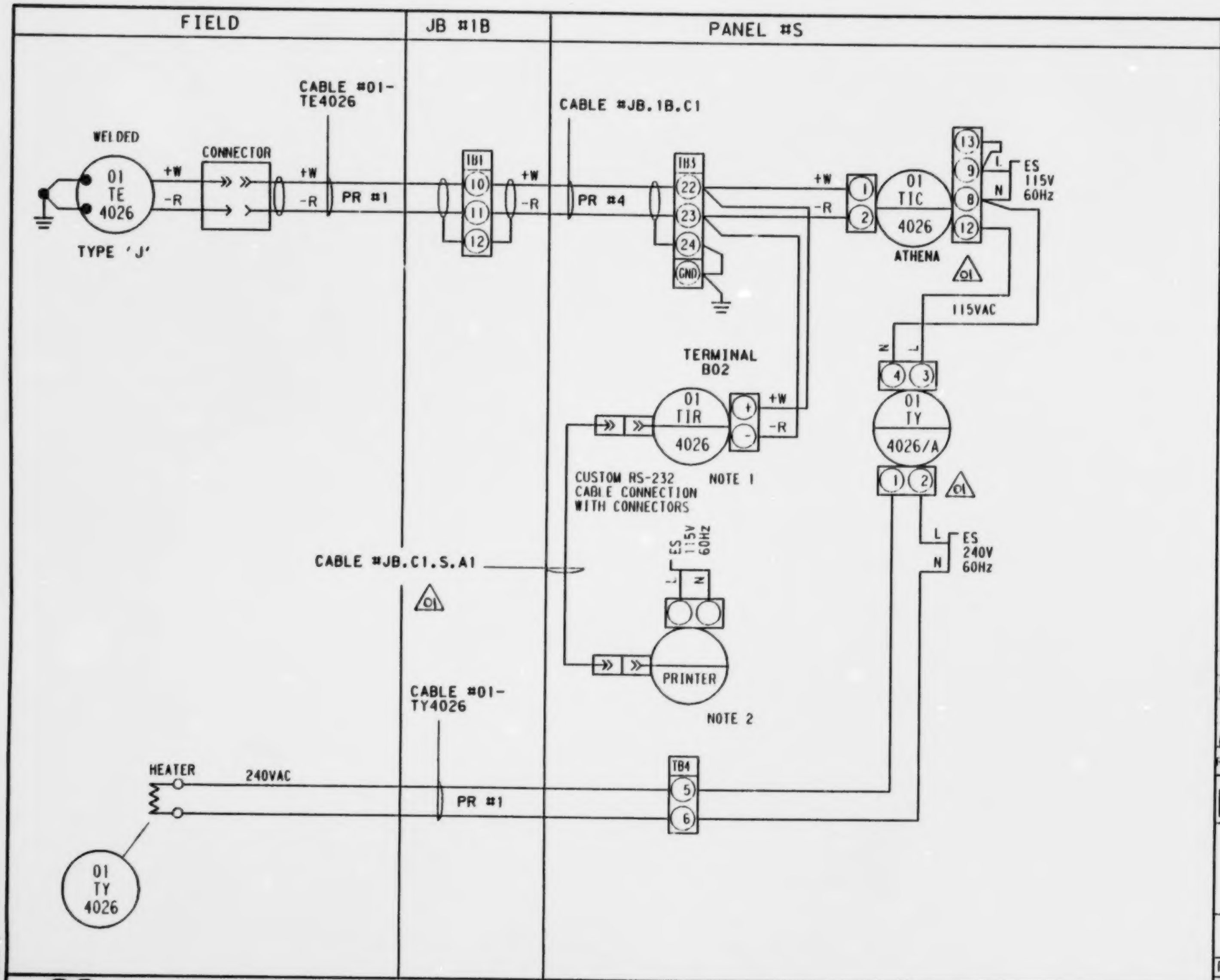

NOTES:

1. DIGI-LINK 4, WITH RS-232 OUTPUT TO EPSON FX-85 PRINTER IN MAIN CONTROL PANEL (A.1).
2. LOCATED IN MAIN CONTROL PANEL.

GENERAL NOTES:

A. 24 VAC Power Supply from GFC, Hammond Series Power Supply in panel.

B. 4-20mA signals to computer are shunted by EMR with a resistor to provide voltage signal to computer card.

C. Compatibility of voltage signals to computer programmed by EMR.

REV	DATE	DESCRIPTION	CHK	MEC APP	EMR APP
02	86.09	PH 1 FINAL	CP	WP	
01	86.08.7	EXPAND AS CHANGED CABLE & ADDED	RJW		
00	86.02.14	FOR EMR APPROVAL	JPW		✓

Energy, Mines and Resources Canada — Énergie, Mines et Ressources Canada

LOOP DIAGRAM
01-T-4026
AREA 1
SLURRY FEED SYSTEM

EMR COPROCESSING PILOT PLANT PP3

PID No. D-3-1 -MP-1
DRAWN | CAD | DATE
CHKD
DESIGN
REV 02

Monenco Consultants Limited

WORK ORDER No. DSS 8279-3

REG. No. 204017

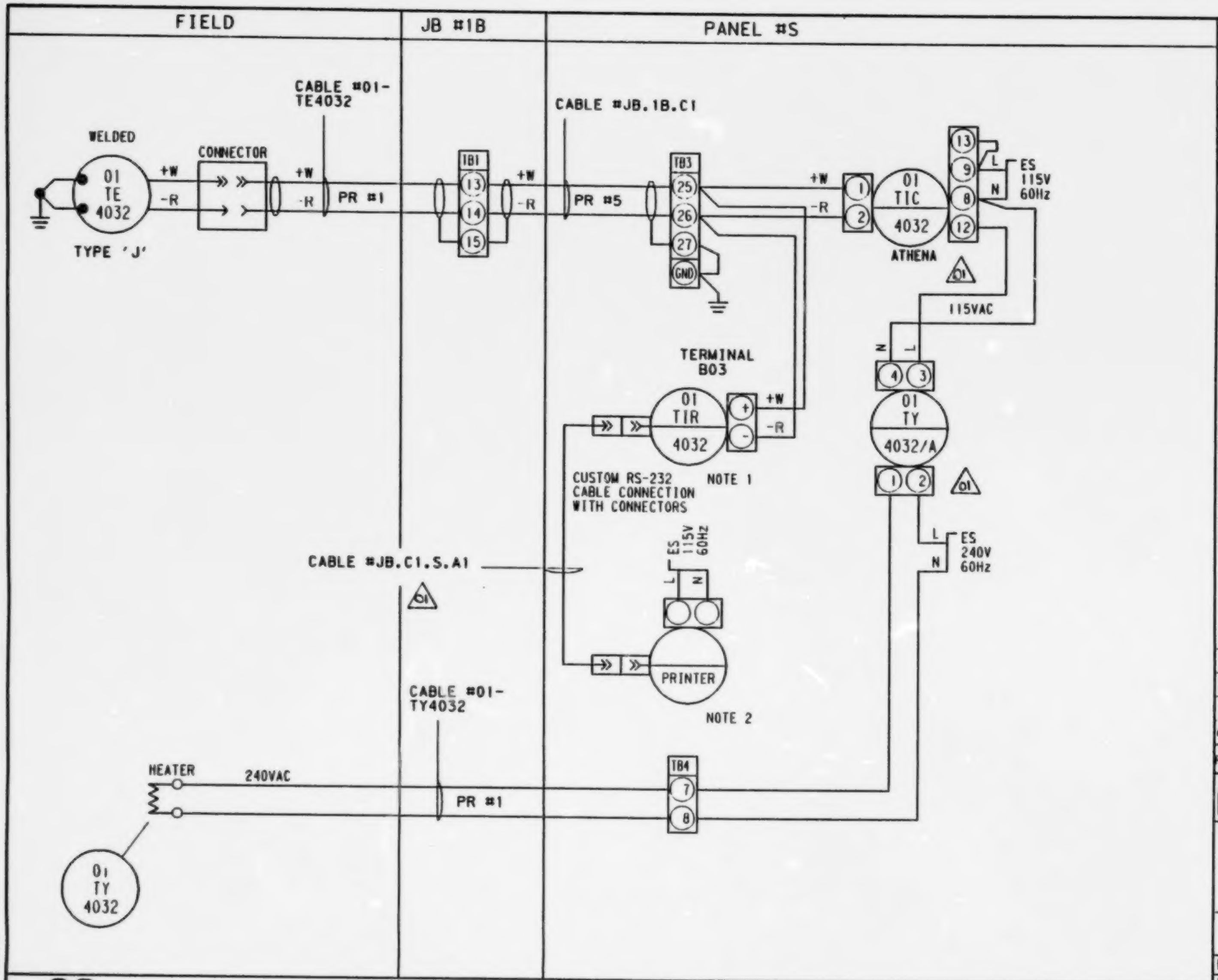

NOTES:
1. DIGI-LINK 4, WITH RS-232 OUTPUT TO EPSON FX-85 PRINTER IN MAIN CONTROL PANEL (A.1).
2. LOCATED IN MAIN CONTROL PANEL.

GENERAL NOTES:

A. 24 VAC Power Supply from GFC, Hammond Series Power Supply in panel.

B. 4-20mA signals to computer are shunted by EMR with a resistor to provide voltage signal to computer card.

C. Compatibility of voltage signals to computer programmed by EMR.

REV	DATE	DESCRIPTION	CHK	MEC APP	EMR APP
02	86.09	PM.1 FINAL	LP	WR	
01	86.08.7	TERMINAL #3 CHANGED CABLE A ADDED	RW		
00	86.07.14	FOR EMR APPROVAL	RPW		✓

Energy, Mines and Resources Canada — Énergie, Mines et Ressources Canada

LOOP DIAGRAM
01-T-4032
AREA 1
SLURRY FEED SYSTEM

EMR COPROCESSING PILOT PLANT
PP3

PID No. D-3-1 -MP-1
DRAWN | CAD | DATE
CHKD
DESIGN
REV 02

Monenco Consultants Limited | WORK ORDER No. DSS 8279-3 | REG. No. 204018

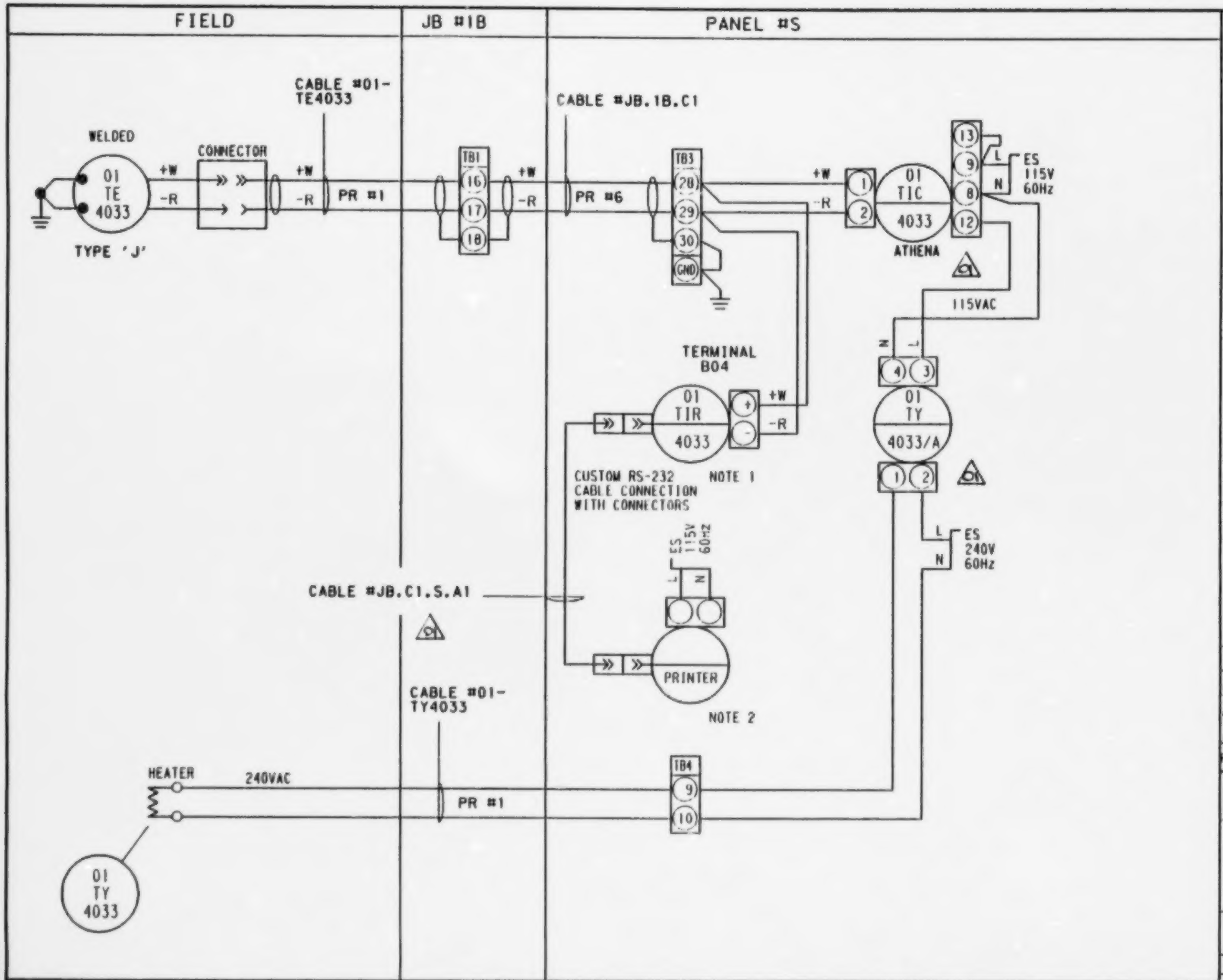

NOTES:
1. DIGI-LINK 4, WITH RS-232 OUTPUT TO EPSON FX-85 PRINTER IN MAIN CONTROL PANEL (A.1).
2. LOCATED IN MAIN CONTROL PANEL.

GENERAL NOTES:

A. 24 VAC Power Supply from GFC, Hammond Series Power Supply in panel.

B. 4-20mA signals to computer are shunted by EMR with a resistor to provide voltage signal to computer card.

C. Compatibility of voltage signals to computer programmed by EMR.

REV	DATE	DESCRIPTION	CHK	MEC APP	EMR APP
02	86.09	P&I FINAL	CP	[illegible]	
01	86.08	TERMINAL #'S CHANGED CABLE # ADDED	RW		
00	86.07	for EMR APPROVAL	KPW		✓

Energy, Mines and Resources Canada — Énergie, Mines et Ressources Canada

LOOP DIAGRAM
01-T-4033
AREA 1
SLURRY FEED SYSTEM

EMR COPROCESSING PILOT PLANT
PP3

PID No. D-3-1 -MP-1
DRAWN | CAD | DATE
CHKD
DESIGN
REV 02

Monenco Consultants Limited | WORK ORDER No. DSS 8279-3 | REG. No. 204019

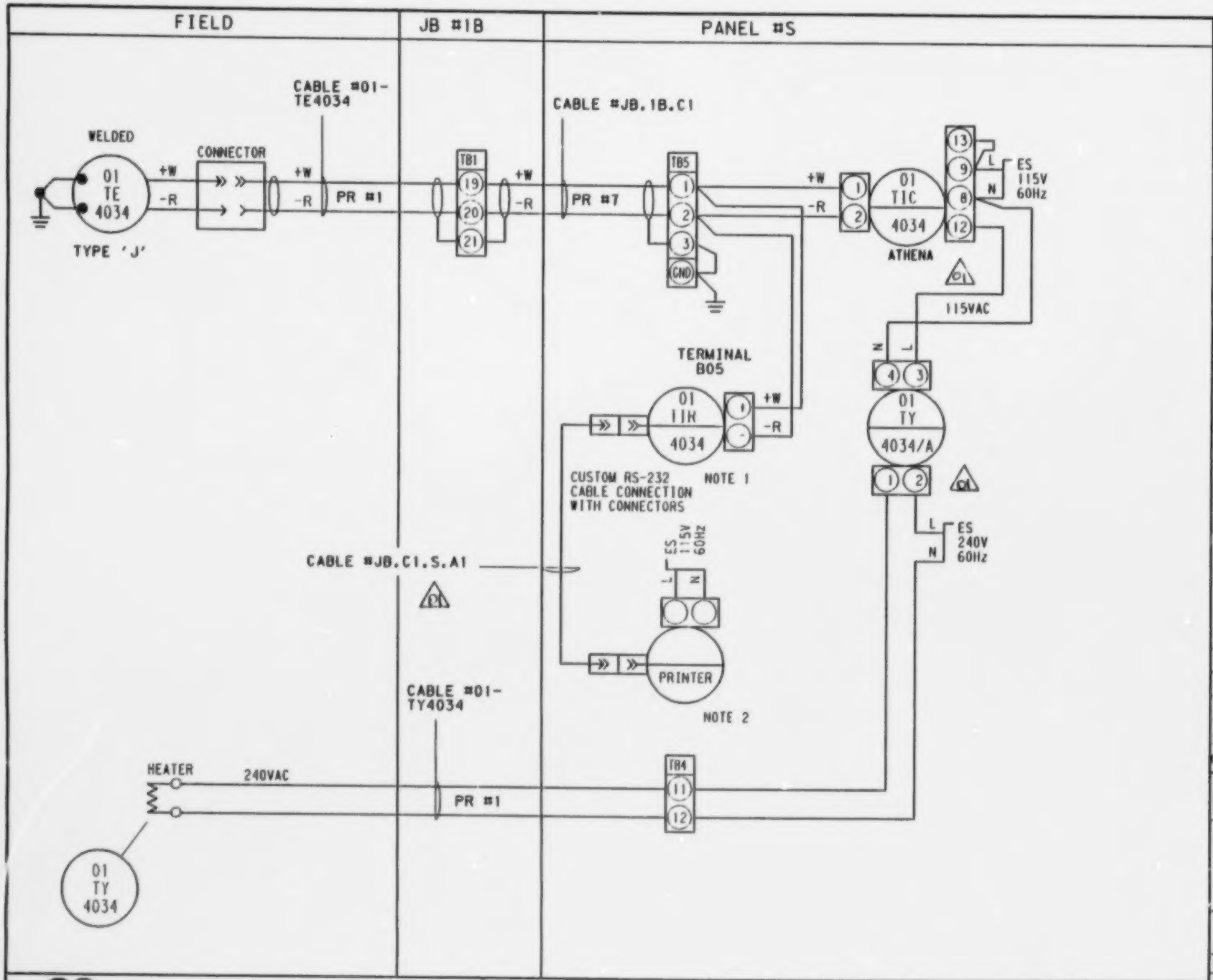

NOTES:
1. DIGI-LINK 4, WITH RS-232 OUTPUT TO EPSON FX-85 PRINTER IN MAIN CONTROL PANEL (A.1).
2. LOCATED IN MAIN CONTROL PANEL.

GENERAL NOTES:

A. 24 VAC Power Supply from GFC, Hammond Series Power Supply in panel.

B. 4-20mA signals to computer are shunted by EMR with a resistor to provide voltage signal to computer card.

C. Compatibility of voltage signals to computer programmed by EMR.

REV	DATE	DESCRIPTION	CHK	MEC APP	EMR APP
02	86.08	PH.1 FINAL	CP	WR	
01	86.08.7	TERMINAL #3 CHANGED CABLE 4 ADDED	RPW		
0	86.07.14	FOR EMR APPROVAL	RPW		✓

Energy, Mines and Resources Canada — Énergie, Mines et Ressources Canada

LOOP DIAGRAM
01-T-4034
AREA 1
SLURRY FEED SYSTEM

EMR COPROCESSING PILOT PLANT
PP3

PID No. D-3-1 -MP-1
DRAWN | CAD | DATE
CHKD
DESIGN
REV 02

Monenco Consultants Limited | WORK ORDER No. DSS 8279-3 | REG. No. 204020

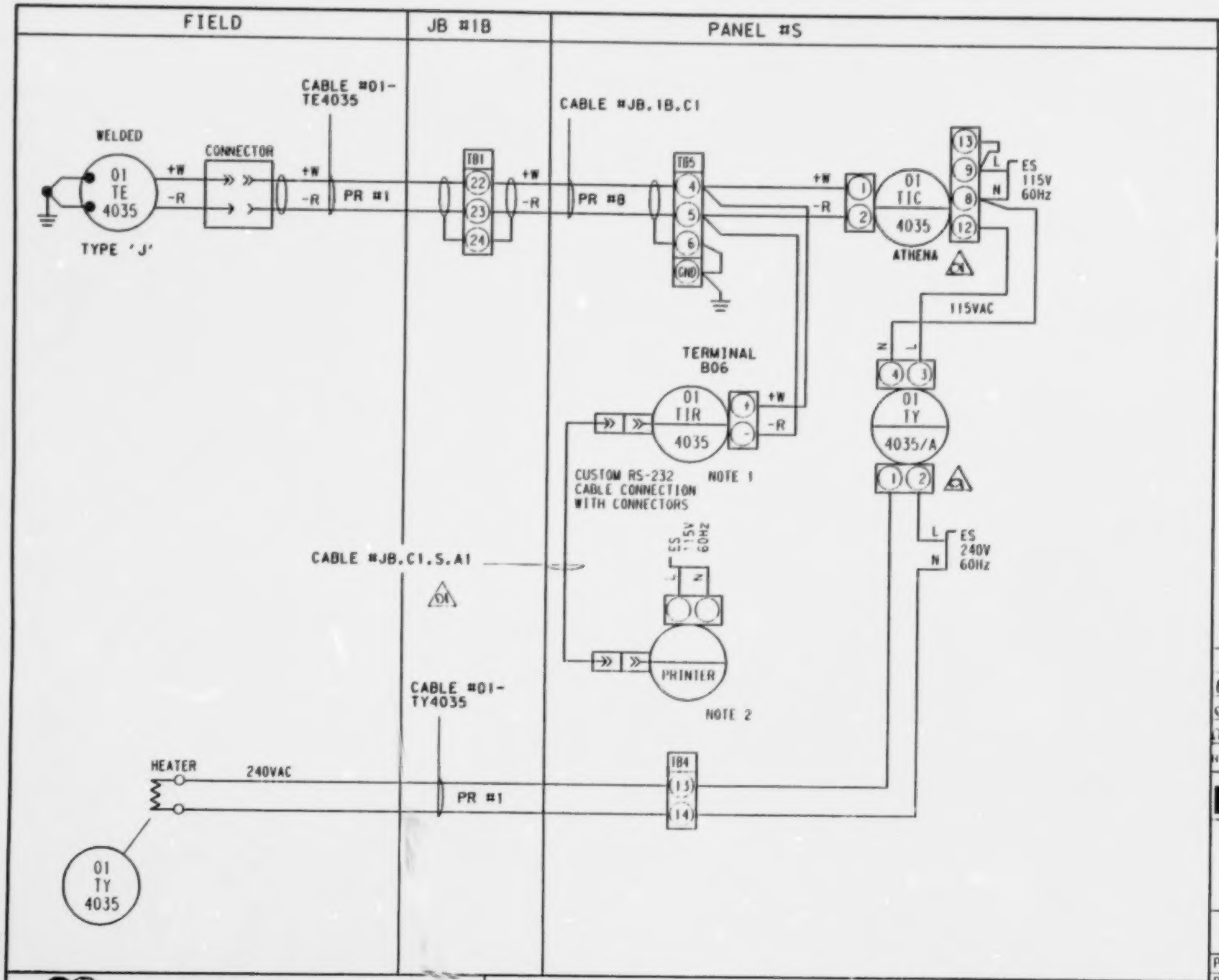

NOTES:
1. DIGI-LINK 4, WITH RS-232 OUTPUT TO EPSON FX-85 PRINTER IN MAIN CONTROL PANEL (A.1).
2. LOCATED IN MAIN CONTROL PANEL.

GENERAL NOTES:

A. 24 VAC Power Supply from GFC, Hammond Series Power Supply in panel.

B. 4-20mA signals to computer are shunted by EMR with a resistor to provide voltage signal to computer card.

C. Compatibility of voltage signals to computer programmed by EMR.

REV	DATE	DESCRIPTION	CHK	MEC APP	EMR APP
02	86.09	PII4 FINAL	CP		
01	86.08.7	TERMINAL #5 CHANGED CABLE # ADDED	RAW		
0	86.07.14	for EMR APPROVAL	VVN		✓

Energy, Mines and Resources Canada — Énergie, Mines et Ressources Canada

LOOP DIAGRAM
01-T-4035
AREA 1
SLURRY FEED SYSTEM

EMR COPROCESSING PILOT PLANT
PP3

PID No. D-3-1 -MP-1
DRAWN | CAD | DATE
CHKD
DESIGN
REV 2

Monenco Consultants Limited | WORK ORDER No. DSS 8279-3 | REG. No. 204021

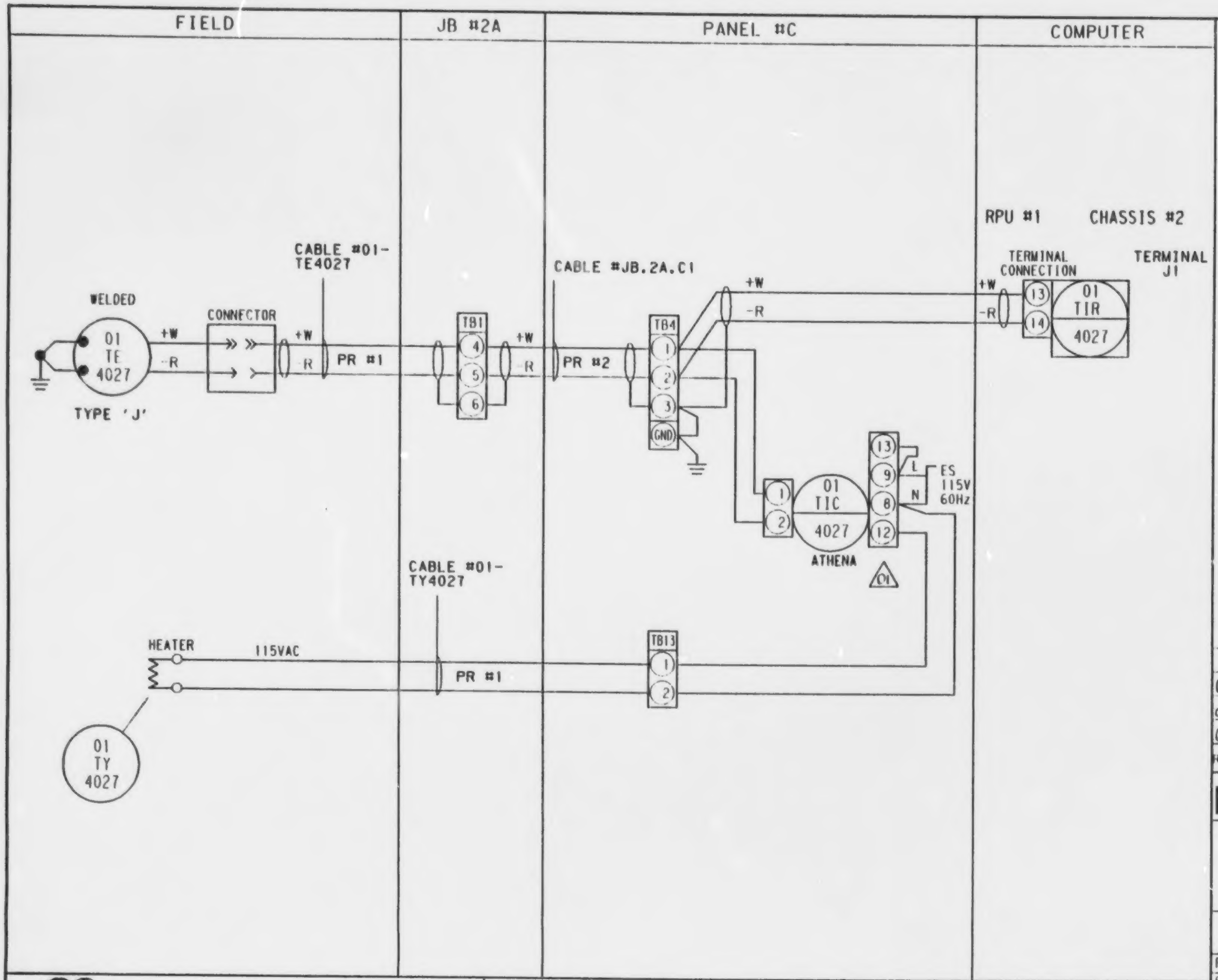

NOTES:

GENERAL NOTES:

A. 24 VAC Power Supply from GFC, Hammond Series Power Supply in panel.

B. 4-20mA signals to computer are shunted by EMR with a resistor to provide voltage signal to computer card.

C. Compatibility of voltage signals to computer programmed by EMR.

REV	DATE	DESCRIPTION	CHK	MEC APP	EMR APP
02	86.09	PH.4 FINAL	CP	WR	
01	86.08.4	TIC TERMINAL #'S REVISED	RAJ		
00	86.07.14	FOR EMR APPROVAL	RPW		✓

Energy, Mines and Resources Canada — Énergie, Mines et Ressources Canada

LOOP DIAGRAM
01-T-4027
AREA 1
SLURRY FEED SYSTEM

EMR COPROCESSING PILOT PLANT
PP3

PID No.	D-3-1 -MP-2		
DRAWN	CAD	DATE	86.05.15
CHKD			REV
DESIGN			02

Monenco Consultants Limited | WORK ORDER No. DSS 8279-3 | REG. No. 203947

LOOP4

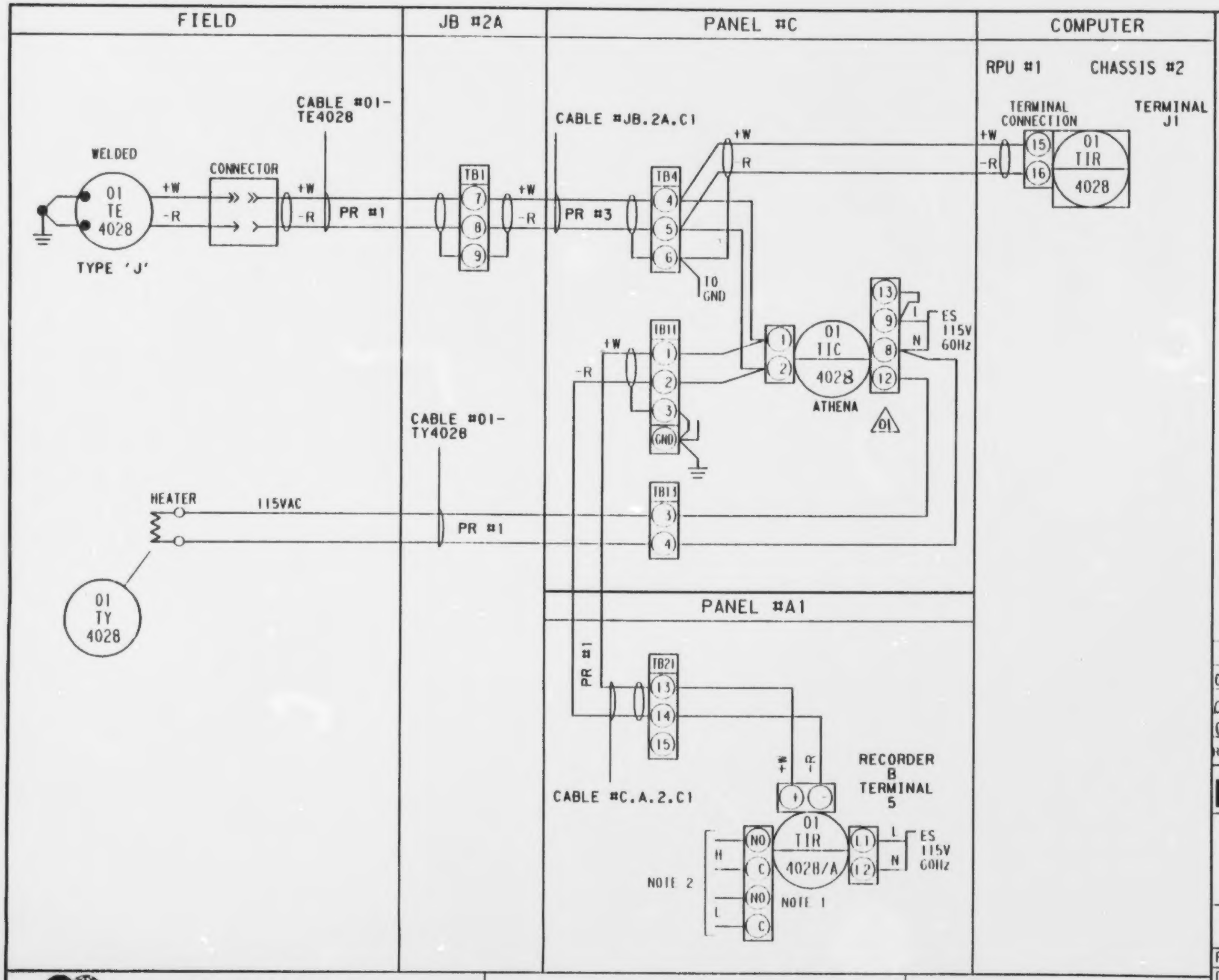

NOTES:
1. POINT-ON "YEW" MULTIPOINT RECORDER.
2. ALARM-WIRED TO COMMON PANEL ALARM. ONE SET OF ALARM CONTACTS PER RECORDER ARE COMMON TO ALL POINTS.

GENERAL NOTES:

A. 24 VAC Power Supply from GFC, Hammond Series Power Supply in panel.

B. 4-20mA signals to computer are shunted by EMR with a resistor to provide voltage signal to computer card.

C. Compatibility of voltage signals to computer programmed by EMR.

REV	DATE	DESCRIPTION	CHK	MEC APP	EMR APP
02	86.09	PH.4 FINAL	CP	[illegible]	
01	86.08.4	TC TERMINAL #5 REVISED	RPW		
00	86.07.14	FOR EMR APPROVAL	RPW		✓

Energy, Mines and Resources Canada — Énergie, Mines et Ressources Canada

LOOP DIAGRAM
01-T-4028
AREA 1
SLURRY FEED SYSTEM

EMR COPROCESSING PILOT PLANT
PP3

PID No.	D-3-1 -MP-2		
DRAWN	CAD	DATE	86.05.15
CHKD		REV	02
DESIGN			

Monenco Consultants Limited

WORK ORDER No. DSS 8279-3

REG. No. 203948

LOOP9

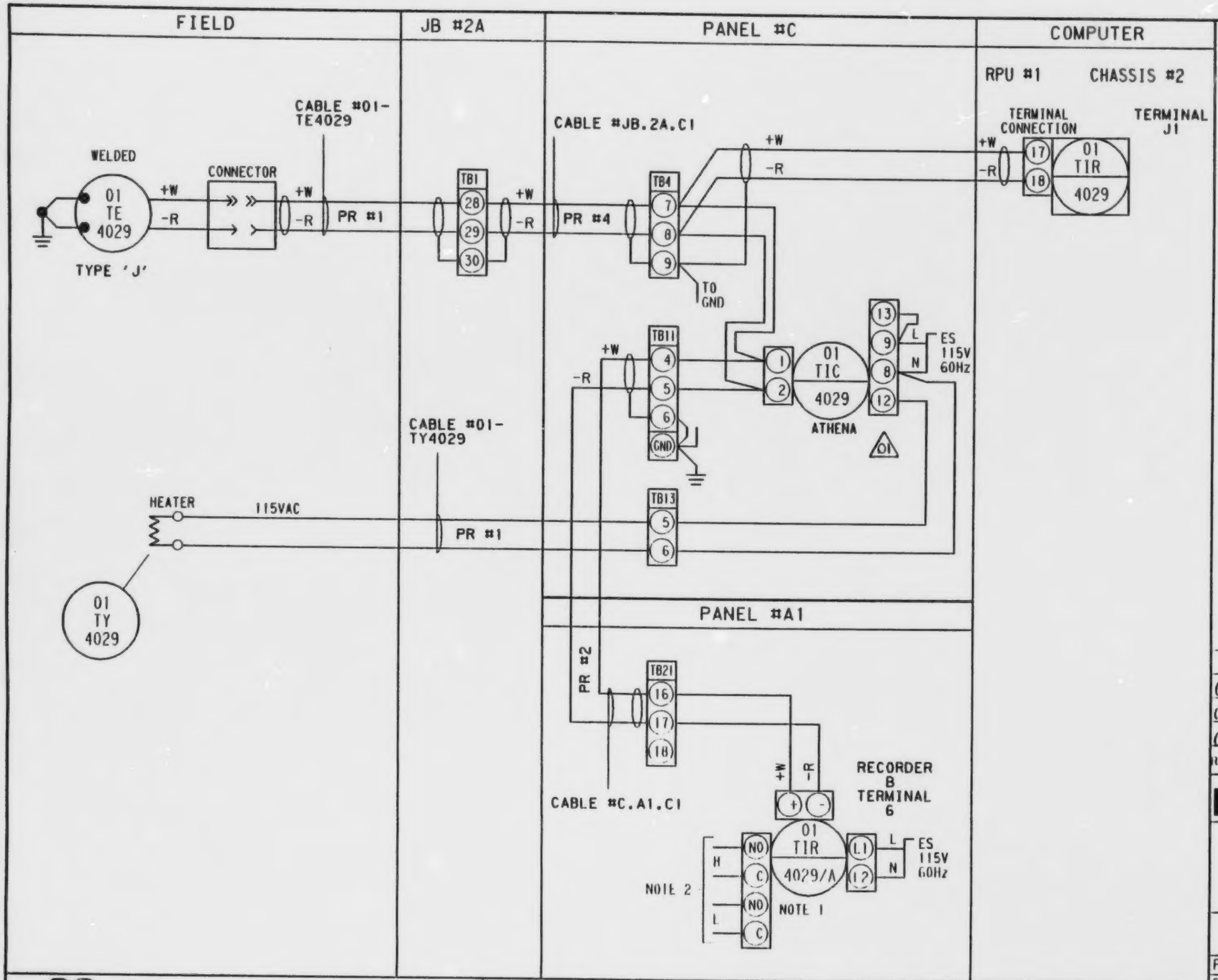

NOTES:
1. POINT-ON "YEW" MULTIPOINT RECORDER.
2. ALARM-WIRED TO COMMON PANEL ALARM. ONE SET OF ALARM CONTACTS PER RECORDER ARE COMMON TO ALL POINTS.

GENERAL NOTES:

A. 24 VAC Power Supply from GFC, Hammond Series Power Supply in panel.

B. 4-20mA signals to computer are shunted by EMR with a resistor to provide voltage signal to computer card.

C. Compatibility of voltage signals to computer programmed by EMR.

REV	DATE	DESCRIPTION	CHK	MEC APP	EMR APP
02	86.09	PH.1 FINAL	CP	[illegible]	
01	86.08.1	TIC TERMINAL #5 REVISED	RPW		
00	86.01.14	FOR EMR APPROVAL	RPW		✓

Energy, Mines and Resources Canada — Énergie, Mines et Ressources Canada

LOOP DIAGRAM
01-T-4029
AREA 1
SLURRY FEED SYSTEM

EMR COPROCESSING PILOT PLANT
PP3

PID No.	D-3-1 -MP-2		
DRAWN	CAD	DATE	86.06.13
CHKD			REV
DESIGN			.2

Monenco Consultants Limited

WORK ORDER No. DSS 8279-3

REG. No. 203946

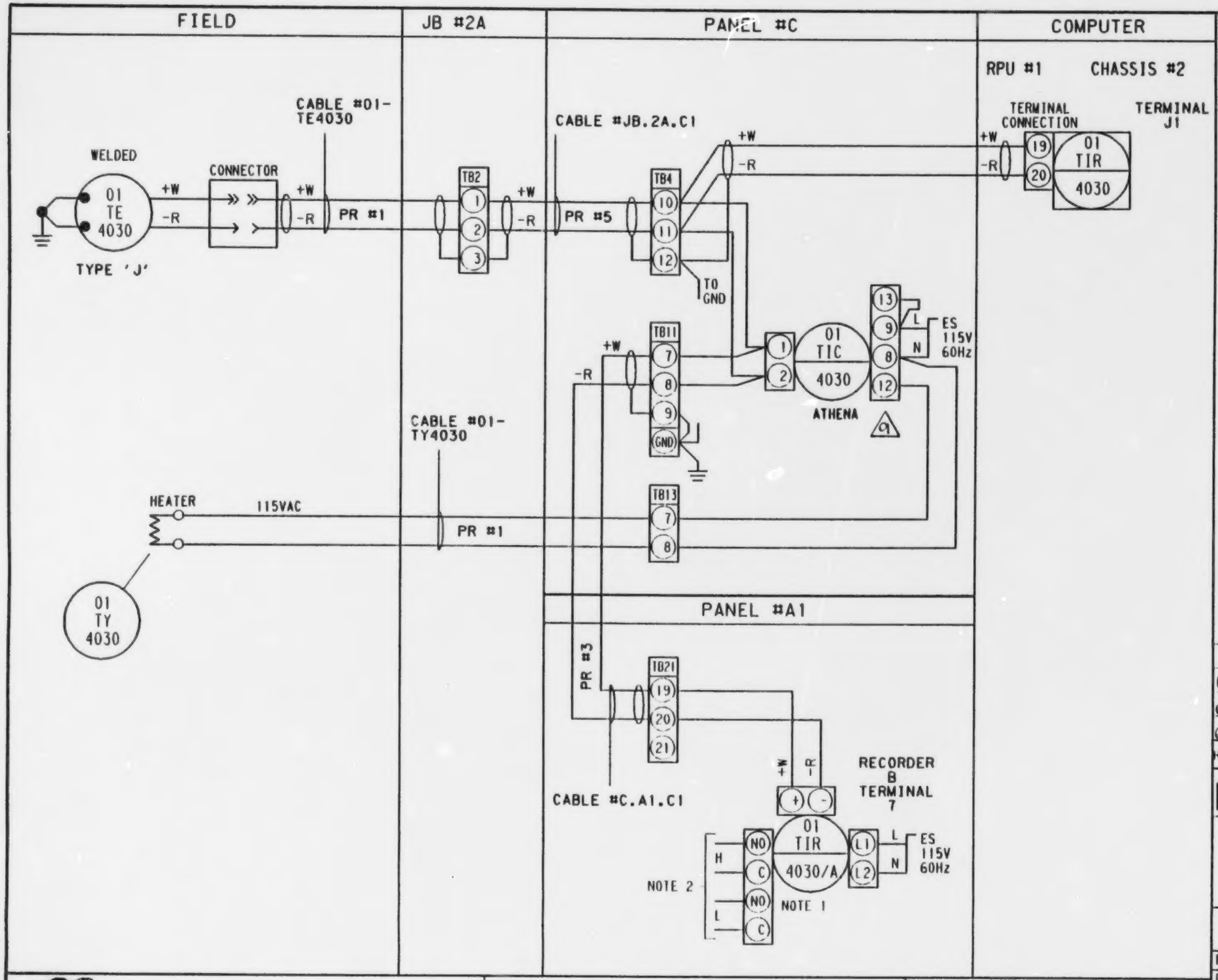

NOTES:
1. POINT-ON "YEW" MULTIPOINT RECORDER.
2. ALARM-WIRED TO COMMON PANEL ALARM. ONE SET OF ALARM CONTACTS PER RECORDER ARE COMMON TO ALL POINTS.

GENERAL NOTES:

A. 24 VAC Power Supply from GFC, Hammond Series Power Supply in panel.

B. 4-20mA signals to computer are shunted by EMR with a resistor to provide voltage signal to computer card.

C. Compatibility of voltage signals to computer programmed by EMR.

REV	DATE	DESCRIPTION	CHK	MEC APP	EMR APP
02	86.09	PH.1 FINAL			
01	86.08.4	TIC TERMINAL #'S REVISED	RPW		
00	86.07.14	FOR EMR APPROVAL	RPW		✓

Energy, Mines and Resources Canada — Énergie, Mines et Ressources Canada

LOOP DIAGRAM
01-T-4030
AREA 1
SLURRY FEED SYSTEM

EMR COPROCESSING PILOT PLANT PP3

PID No.	D-3-1 -MP-2		
DRAWN	CAD	DATE	86.06.13
CHKD		REV	02
DESIGN			

Monenco Consultants Limited

WORK ORDER No. DSS 8279-3

REG. No. 203949

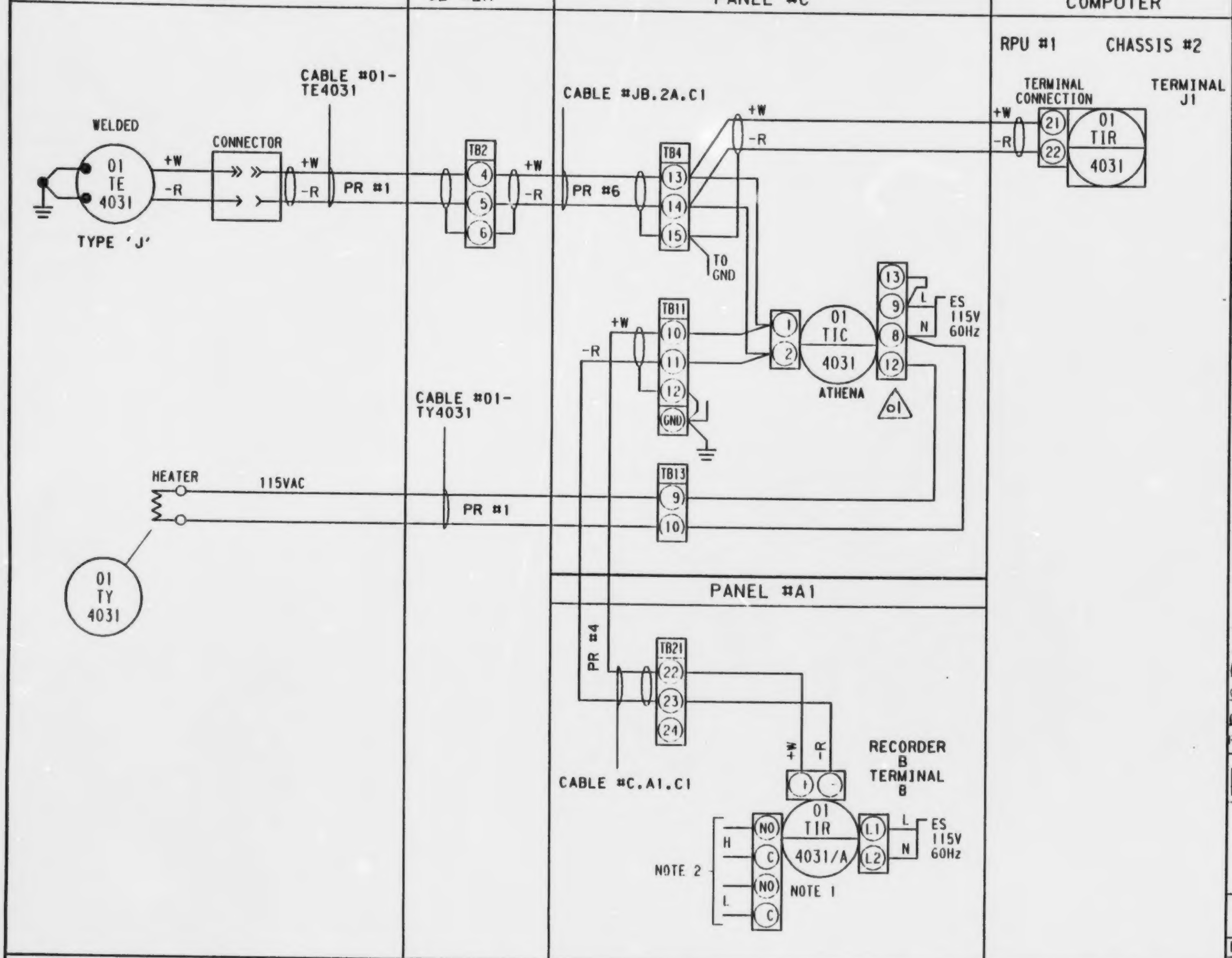

NOTES:
1. POINT-ON "YEW" MULTIPOINT RECORDER.
2. ALARM-WIRED TO COMMON PANEL ALARM. ONE SET OF ALARM CONTACTS PER RECORDER ARE COMMON TO ALL POINTS.

GENERAL NOTES:

A. 24 VAC Power Supply from GFC, Hammond Series Power Supply in panel.

B. 4-20mA signals to computer are shunted by EMR with a resistor to provide voltage signal to computer card.

C. Compatibility of voltage signals to computer programmed by EMR.

REV	DATE	DESCRIPTION	CHK	MEC APP	EMR APP
02	86.09	P&I FINAL			
01	86.08.4	TIC TERMINAL #5 REVISED	RPW		
00	86.07.14	FOR EMR APPROVAL	RPW		✓

Energy, Mines and Resources Canada — Énergie, Mines et Ressources Canada

LOOP DIAGRAM
01-T-4031
AREA 1
SLURRY FEED SYSTEM

EMR COPROCESSING PILOT PLANT PP3

PID No. D-3-1 -MP-2
DRAWN CAD DATE 86.06.13
CHKD REV 02
DESIGN

Monenco Consultants Limited

WORK ORDER No. DSS 8279-3

REG. No. 203950

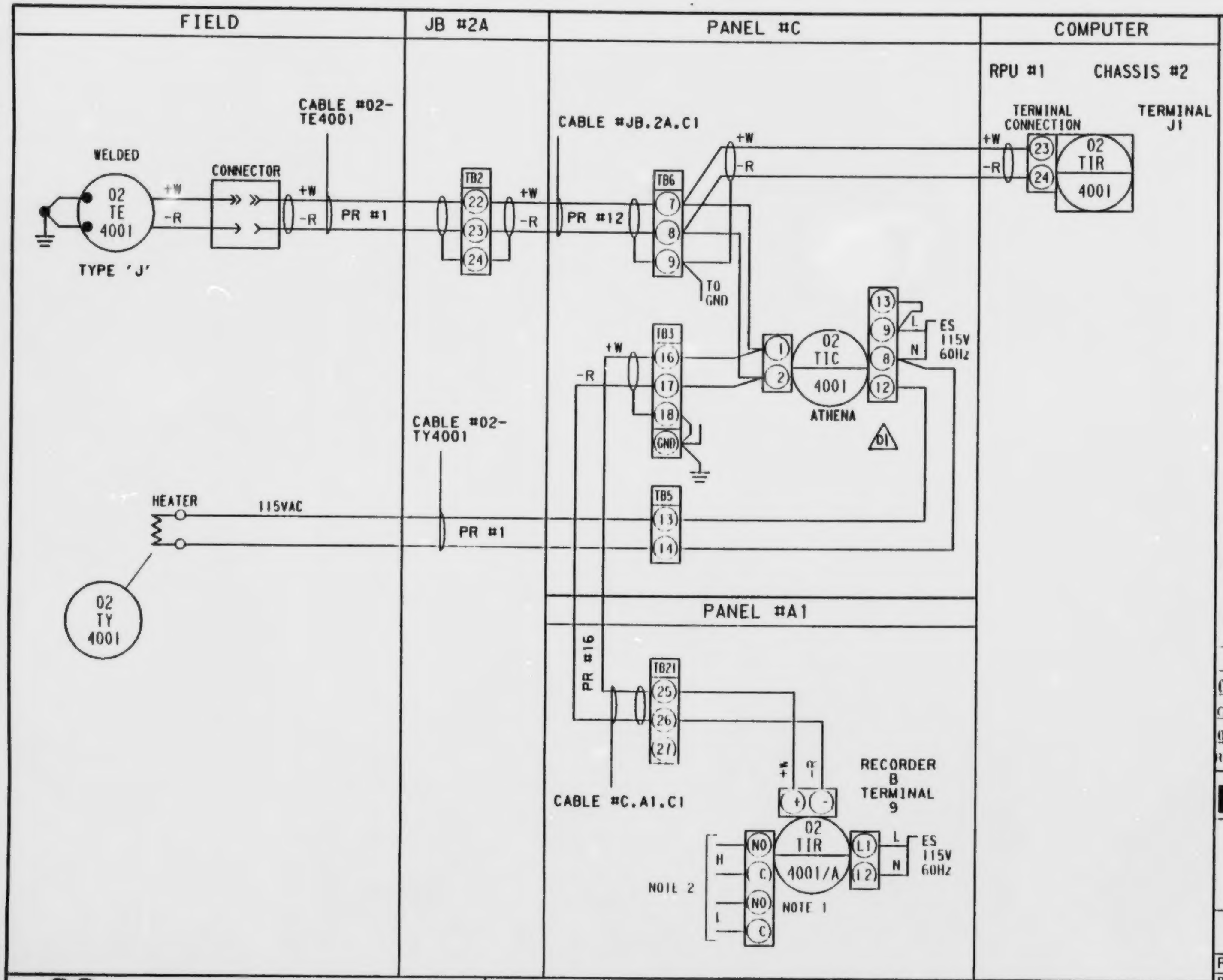

NOTES:
1. POINT-ON "YEW" MULTIPOINT RECORDER.
2. ALARM-WIRED TO COMMON PANEL ALARM. ONE SET OF ALARM CONTACTS PER RECORDER ARE COMMON TO ALL POINTS.

GENERAL NOTES:

A. 24 VAC Power Supply from GFC, Hammond Series Power Supply in panel.

B. 4-20mA signals to computer are shunted by EMR with a resistor to provide voltage signal to computer card.

C. Compatibility of voltage signals to computer programmed by EMR.

REV	DATE	DESCRIPTION	CHK	MFC APP	EMR APP
02	86.09	A1.4 FINAL			
01	86.08.4	TK TERMINAL #'S REVISED			
00	86.07.14	FOR EMR APPROVAL	RJW		✓

Energy, Mines and Resources Canada — Énergie, Mines et Ressources Canada

LOOP DIAGRAM
02-T-4001
AREA 2
FEED PREHEAT AND DUMP SYSTEM

EMR COPROCESSING PILOT PLANT
PP3

PID No.	D-3-2 -MP-1		
DRAWN	CAD	DATE	86.06.13
CHKD			REV 02
DESIGN			

Monenco Consultants Limited

WORK ORDER No. DSS 8279-3

REG. No. 203967

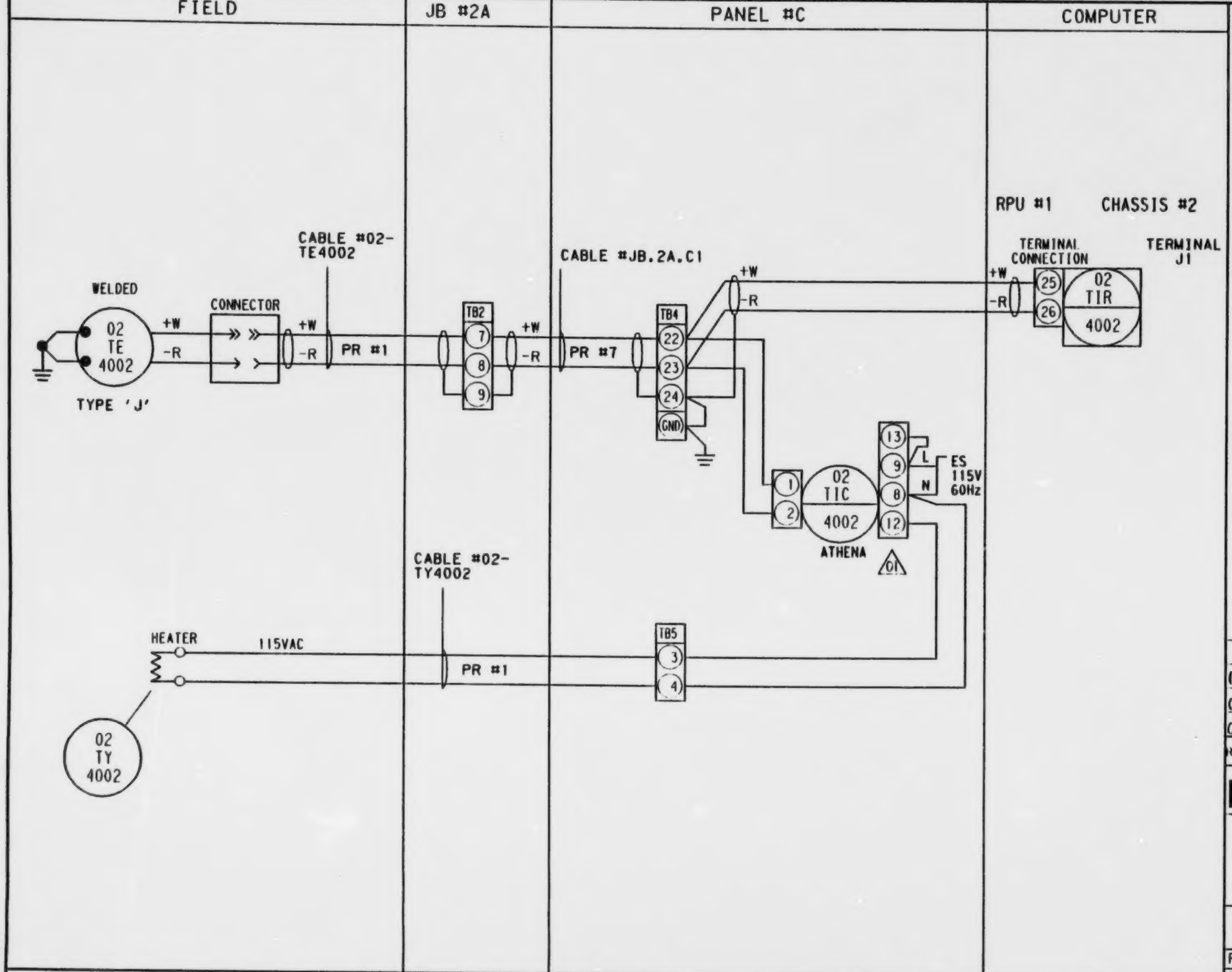

NOTES:

GENERAL NOTES:

A. 24 VAC Power Supply from GFC, Hammond Series Power Supply in panel.

B. 4-20mA signals to computer are shunted by EMR with a resistor to provide voltage signal to computer card.

C. Compatibility of voltage signals to computer programmed by EMR.

REV	DATE	DESCRIPTION	CHK	MEC APP	EMR APP
02	86.09	PH.4 FINAL	CF	WRP	
01	86.08.4	TIC TERMINAL #'S REVISED	RPW		
00	86.07.14	FOR EMR APPROVAL	RPW		✓

Energy, Mines and Resources Canada — Énergie, Mines et Ressources Canada

LOOP DIAGRAM
02-T-4002
AREA 2
FEED PREHEAT AND DUMP SYSTEM

EMR COPROCESSING PILOT PLANT
PP3

PID No.	D-3-2 -MP-1		
DRAWN	CAD	DATE	86.06.13
CHKD			REV 02
DESIGN			

Monenco Consultants Limited

WORK ORDER No. DSS 8279-3

REG. No. 203962

LOOP4

B

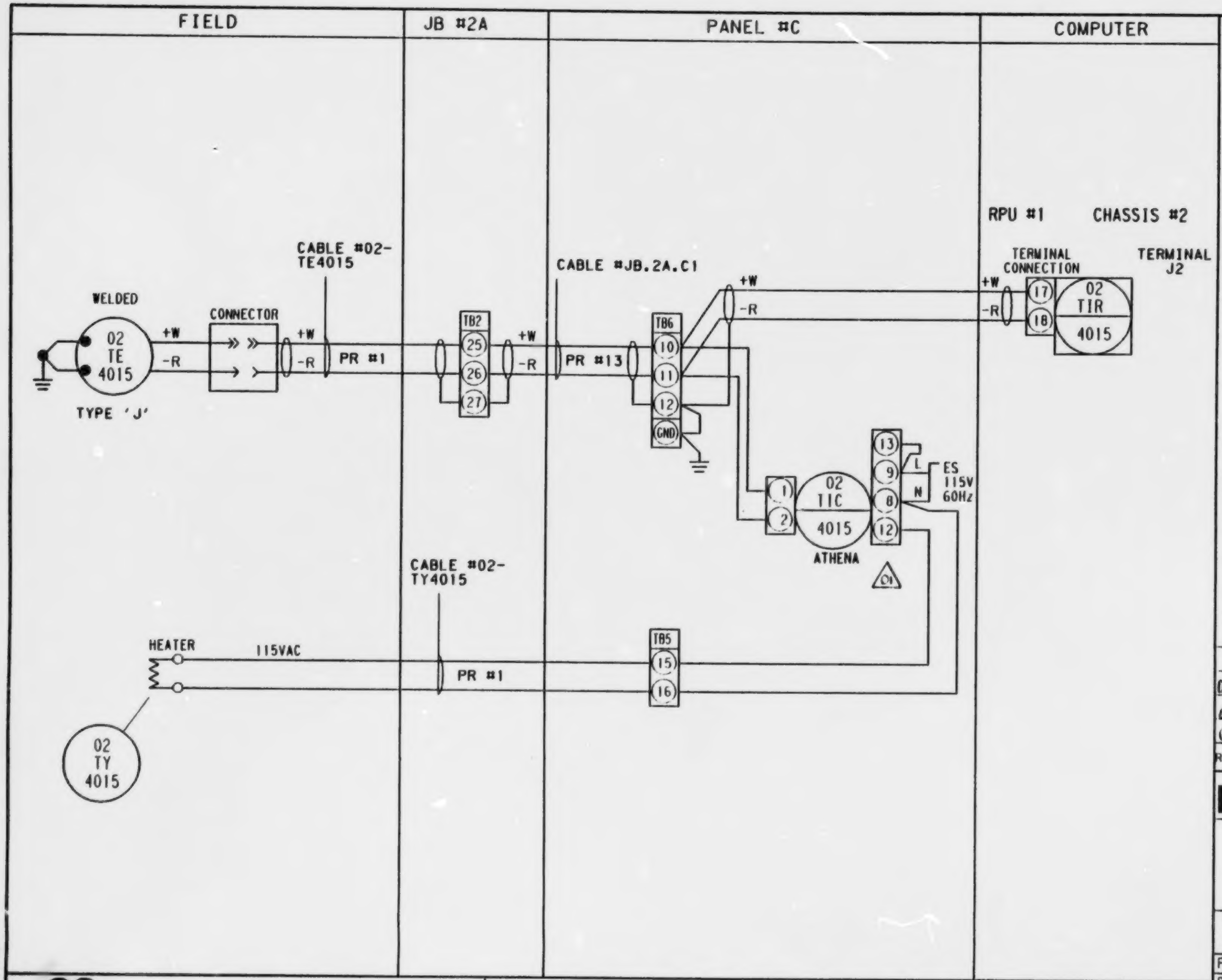

NOTES:

GENERAL NOTES:

A. 24 VAC Power Supply from GFC, Hammond Series Power Supply in panel.

B. 4-20mA signals to computer are shunted by EMR with a resistor to provide voltage signal to computer card.

C. Compatibility of voltage signals to computer programmed by EMR.

REV	DATE	DESCRIPTION	CHK	MEC APP	EMR APP
02	86.09	PII.1 FINAL			
01	86.08.4	TIC TERMINAL #'s REVISED	RRJ		
00	86.07.14	FOR EMR APPROVAL	RPW		✓

Energy, Mines and Resources Canada — Énergie, Mines et Ressources Canada

LOOP DIAGRAM
02-T-4015
AREA 2
FEED PREHEAT AND DUMP SYSTEM

EMR COPROCESSING PILOT PLANT
PP3

PID No.	D-3-2 -MP-1		
DRAWN	CAD	DATE	86.06.13
CHKD		REV	02
DESIGN			

Monenco Consultants Limited | WORK ORDER No. DSS 8279-3 | REG. No. 203968

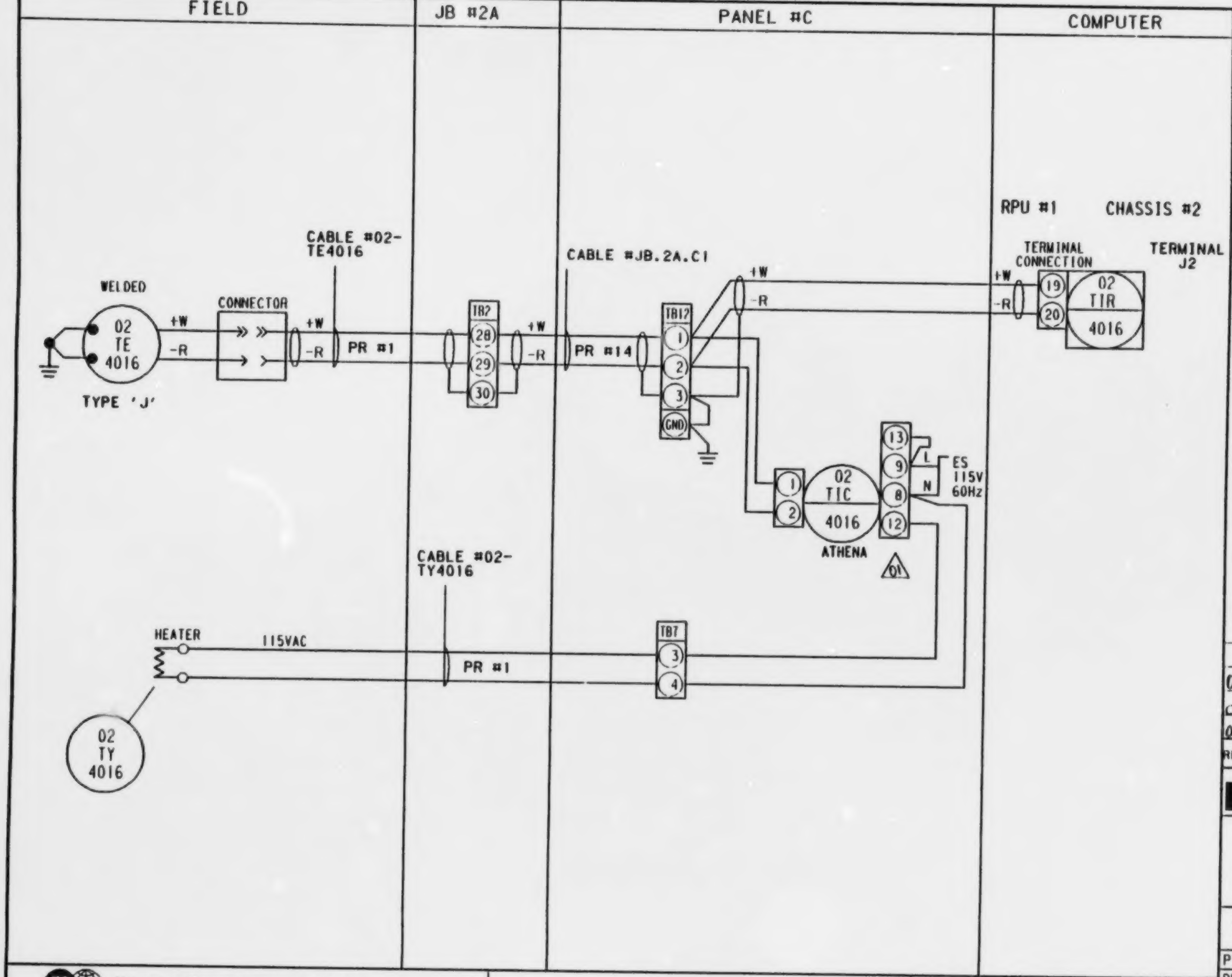

NOTES:

GENERAL NOTES:

A. 24 VAC Power Supply from GFC, Hammond Series Power Supply in panel.

B. 4-20mA signals to computer are shunted by EMR with a resistor to provide voltage signal to computer card.

C. Compatibility of voltage signals to computer programmed by EMR.

REV	DATE	DESCRIPTION	CHK	MEC APP	EMR APP
02	86.09	P11.4 FINAL			
01	86.08.4	TIC TERMINAL #'s REVISED	RPJ		
00	86.07.14	FOR EMR APPROVAL	RPJ		✓

Energy, Mines and Resources Canada — Énergie, Mines et Ressources Canada

LOOP DIAGRAM
02-T-4016
AREA 2
FEED PREHEAT AND DUMP SYSTEM

EMR COPROCESSING PILOT PLANT
PP3

PID No.	D-3-2 -MP-1	
DRAWN	CAD	DATE 86.06.16
CHKD		REV
DESIGN		02

LOOP4

Monenco Consultants Limited

WORK ORDER No. DSS 8279-3

REG. No. 203986

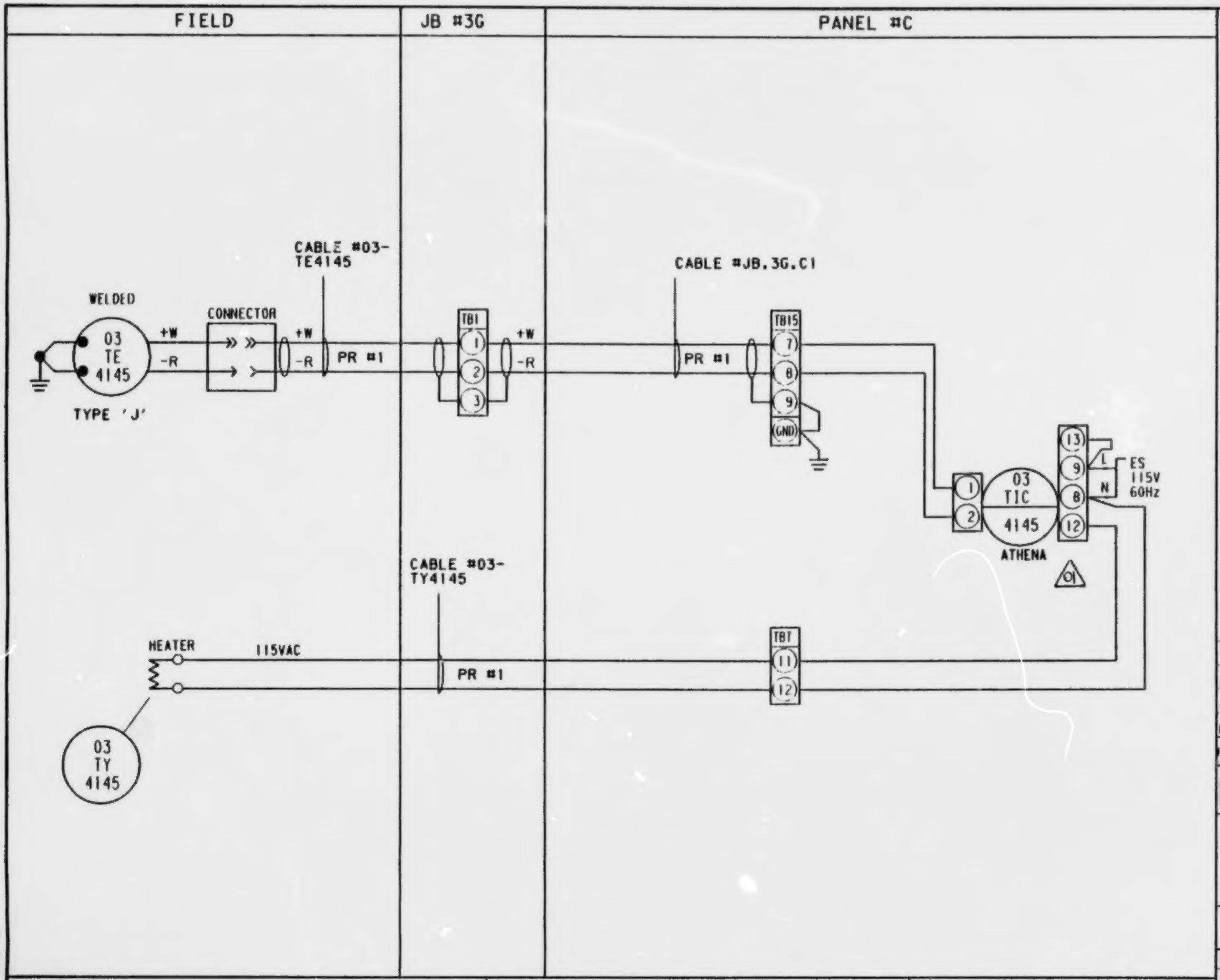

NOTES:

GENERAL NOTES:

A. 24 VAC Power Supply from GFC, Hammond Series Power Supply in panel.

B. 4-20mA signals to computer are shunted by EMR with a resistor to provide voltage signal to computer card.

C. Compatibility of voltage signals to computer programmed by EMR.

REV	DATE	DESCRIPTION	CHK	MEC APP	EMR APP
02	86.09	PH.1 FINAL			
01	86.08.4	TIC TERMINAL #'s REVISED			
00	86.07.14	FOR EMR APPROVAL			✓

Energy, Mines and Resources Canada — Énergie, Mines et Ressources Canada

LOOP DIAGRAM
03-T-4145
AREA 3
REACTOR AND SAMPLING SYSTEM

EMR COPROCESSING PILOT PLANT
PP3

PID No. D-3-3 -MP-1
DRAWN | CAD | DATE
CHKD
DESIGN
REV 02

Monenco Consultants Limited

WORK ORDER No. DSS 8279-3

REG. No. 204180

LOOP18

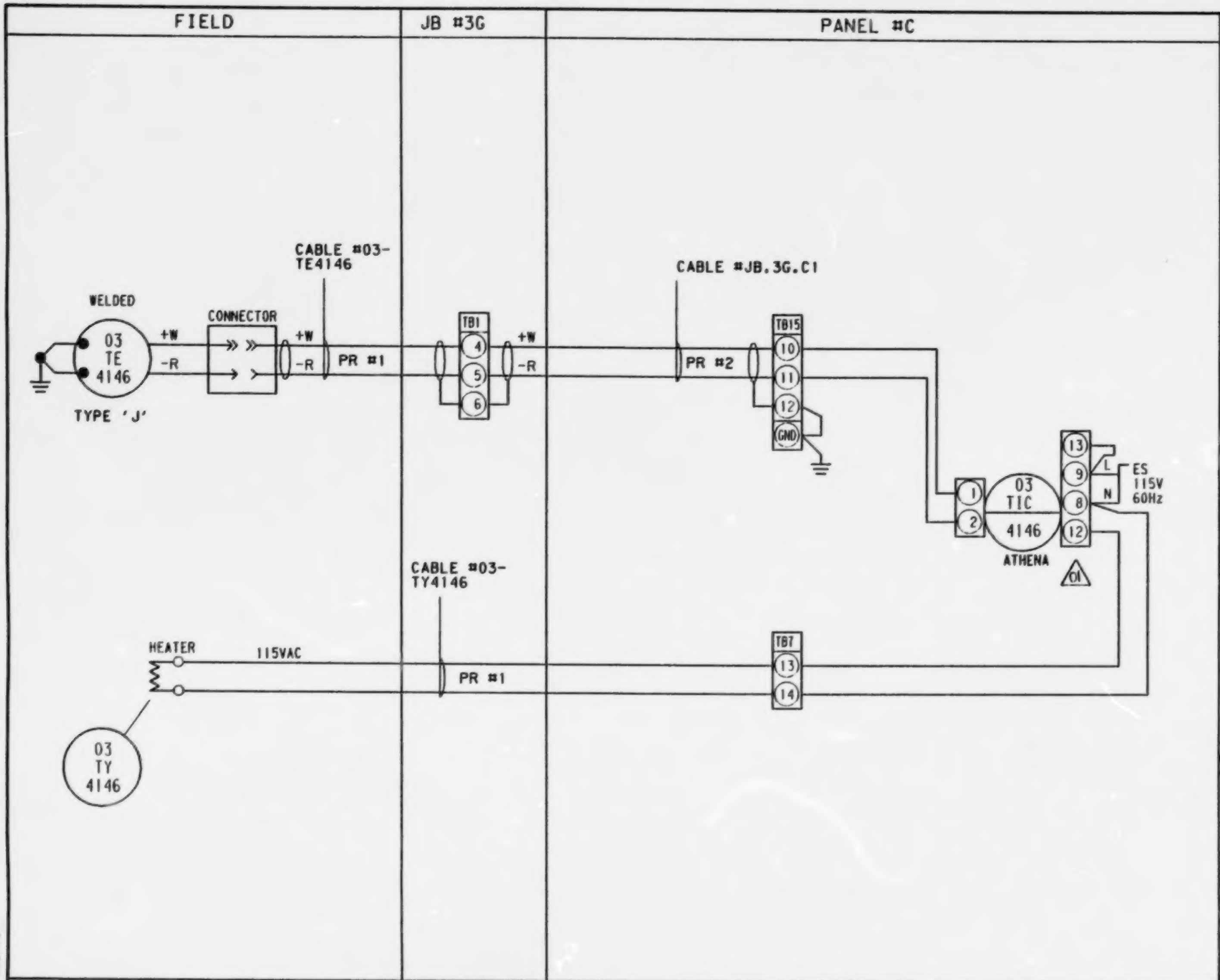

NOTES:

GENERAL NOTES:

A. 24 VAC Power Supply from GFC, Hammond Series Power Supply in panel.

B. 4-20mA signals to computer are shunted by EMR with a resistor to provide voltage signal to computer card.

C. Compatibility of voltage signals to computer programmed by EMR.

REV	DATE	DESCRIPTION	CHK	MEC APP	EMR APP
02	86.09	PH.1 FINAL			
01	86.08.4	TIC TERMINAL #'S REVISED	RPW		
00	86.07.14	FOR EMR APPROVAL	RPW		✓

Energy, Mines and Resources Canada — Énergie, Mines et Ressources Canada

LOOP DIAGRAM
03-T-4146
AREA 3
REACTOR AND SAMPLING SYSTEM

EMR COPROCESSING PILOT PLANT
PP3

PID No. D-3-3 -MP-1
DRAWN CAD DATE
CHKD
DESIGN
REV 02

LOOP18

Monenco Consultants Limited | WORK ORDER No. DSS 8279-3 | REG. No. 204181

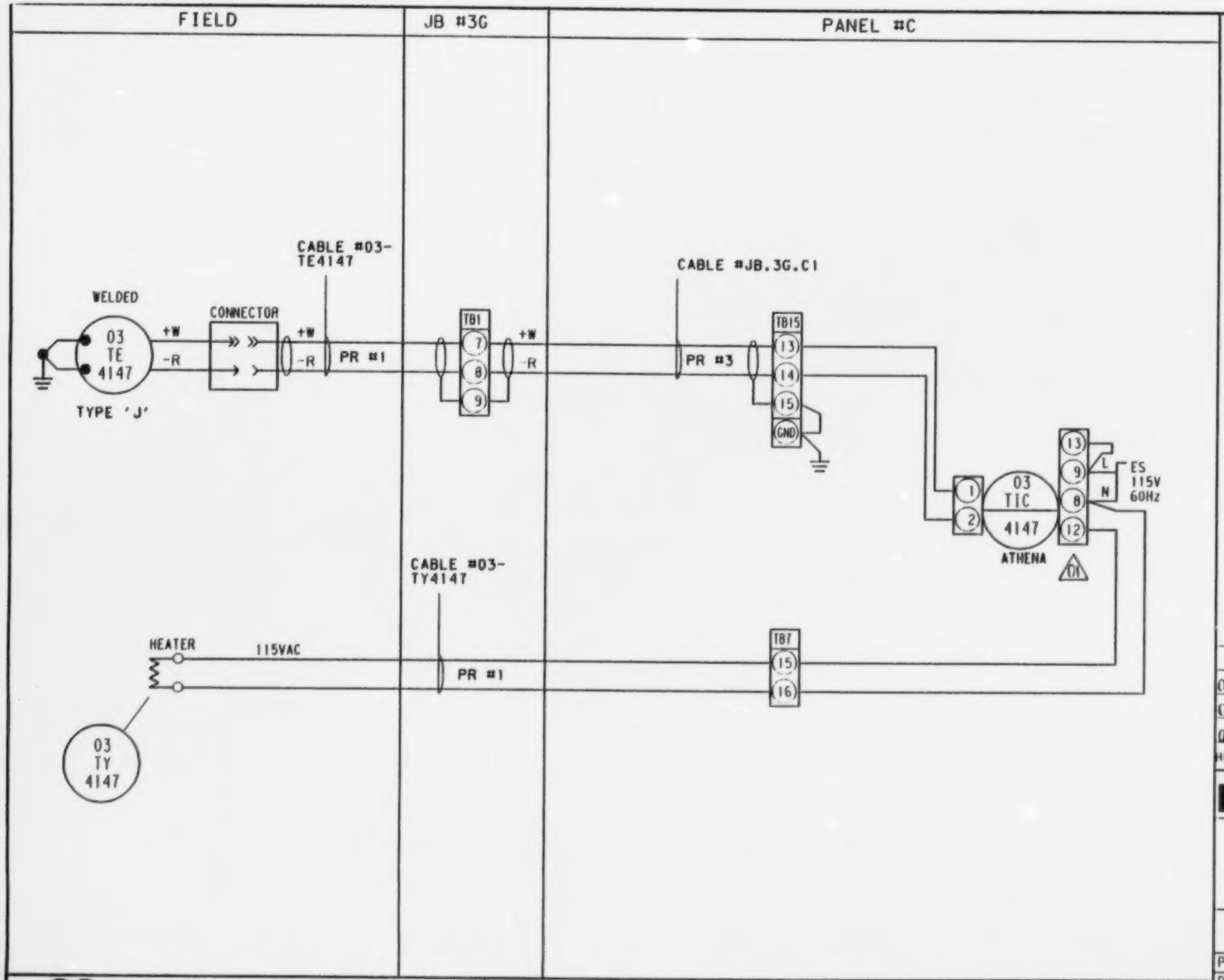

NOTES:

GENERAL NOTES:

A. 24 VAC Power Supply from GFC, Hammond Series Power Supply in panel.

B. 4-20mA signals to computer are shunted by EMR with a resistor to provide voltage signal to computer card.

C. Compatibility of voltage signals to computer programmed by EMR.

REV	DATE	DESCRIPTION	CHK	MEC APP	EMR APP
02	86.09	PIL4 FINAL	.P	4MP	
01	86.08.4	TIC TERMINAL #'s REVISED	RAJ		
00	86.07.14	FOR EMR APPROVAL	RPW		

Energy, Mines and Resources Canada — Énergie, Mines et Ressources Canada

LOOP DIAGRAM
03-T-4147
AREA 3
REACTOR AND SAMPLING SYSTEM

EMR COPROCESSING PILOT PLANT
PP3

PID No. D-3-3 -MP-1

DRAWN | CAD | DATE
CHKD
DESIGN
REV 02

Monenco Consultants Limited

WORK ORDER No. DSS 8279-3

REG. No. 204182

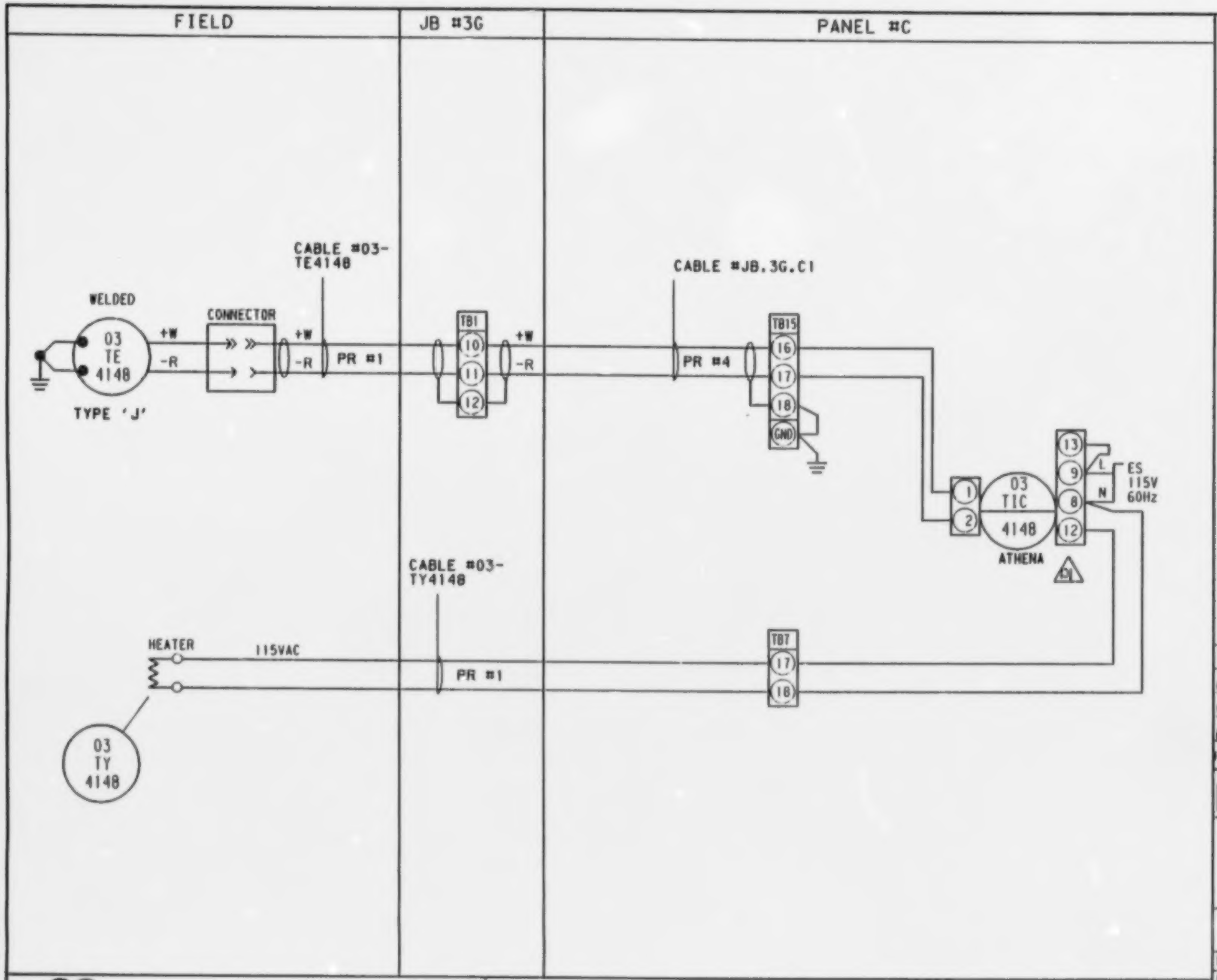

NOTES:

GENERAL NOTES:

A. 24 VAC Power Supply from GFC, Hammond Series Power Supply in panel.

B. 4-20mA signals to computer are shunted by EMR with a resistor to provide voltage signal to computer card.

C. Compatibility of voltage signals to computer programmed by EMR.

REV	DATE	DESCRIPTION	CHK	MEC APP	EMR APP
02	86.09	P&I FINAL	CP	[illegible]	
01	86.08.4	TE TERMINAL #'s REVISED	RPW		
00	86.07.14	IDI EMR APPROVAL	RPW		✓

Energy, Mines and Resources Canada — Énergie, Mines et Ressources Canada

LOOP DIAGRAM
03-T-4148
AREA 3
REACTOR AND SAMPLING SYSTEM

EMR COPROCESSING PILOT PLANT
PP3

PID No. D-3-3 -MP-1
DRAWN | CAD | DATE
CHKD
DESIGN
Rev 2

LOOP18

Monenco Consultants Limited | WORK ORDER No. DSS 8279-3 | REG. No. 204183

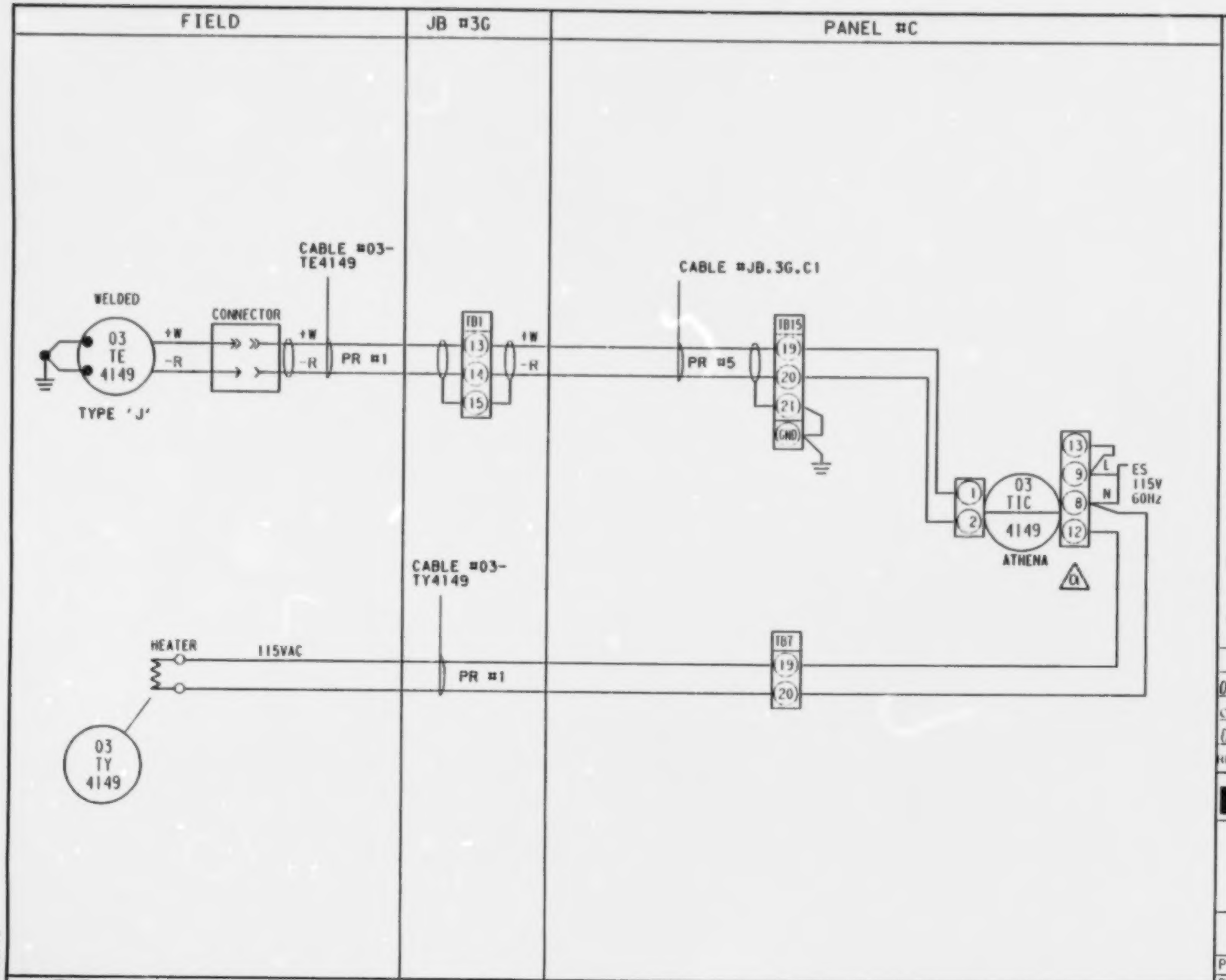

NOTES:

GENERAL NOTES:

A. 24 VAC Power Supply from GFC, Hammond Series Power Supply in panel.

B. 4-20mA signals to computer are shunted by EMR with a resistor to provide voltage signal to computer card.

C. Compatibility of voltage signals to computer programmed by EMR.

REV	DATE	DESCRIPTION	CHK	MEC APP	EMR APP
02	86.09	PH.1 FINAL	LP	WAR	
01	86.09.5	TIC TERMINAL #'S REVISED	RKJ		
00	86.07.14	FOR EMR APPROVAL	KMW		✓

Energy, Mines and Resources Canada / Énergie, Mines et Ressources Canada

LOOP DIAGRAM
03-T-4149
AREA 3
REACTOR AND SAMPLING SYSTEM

EMR COPROCESSING PILOT PLANT PP3

PID No. D-3-3 -MP-1
DRAWN / CAD / DATE
CHKD
DESIGN
REV 02

Monenco Consultants Limited | WORK ORDER No. DSS 8279-3 | REG. No. 204184

LOOP18

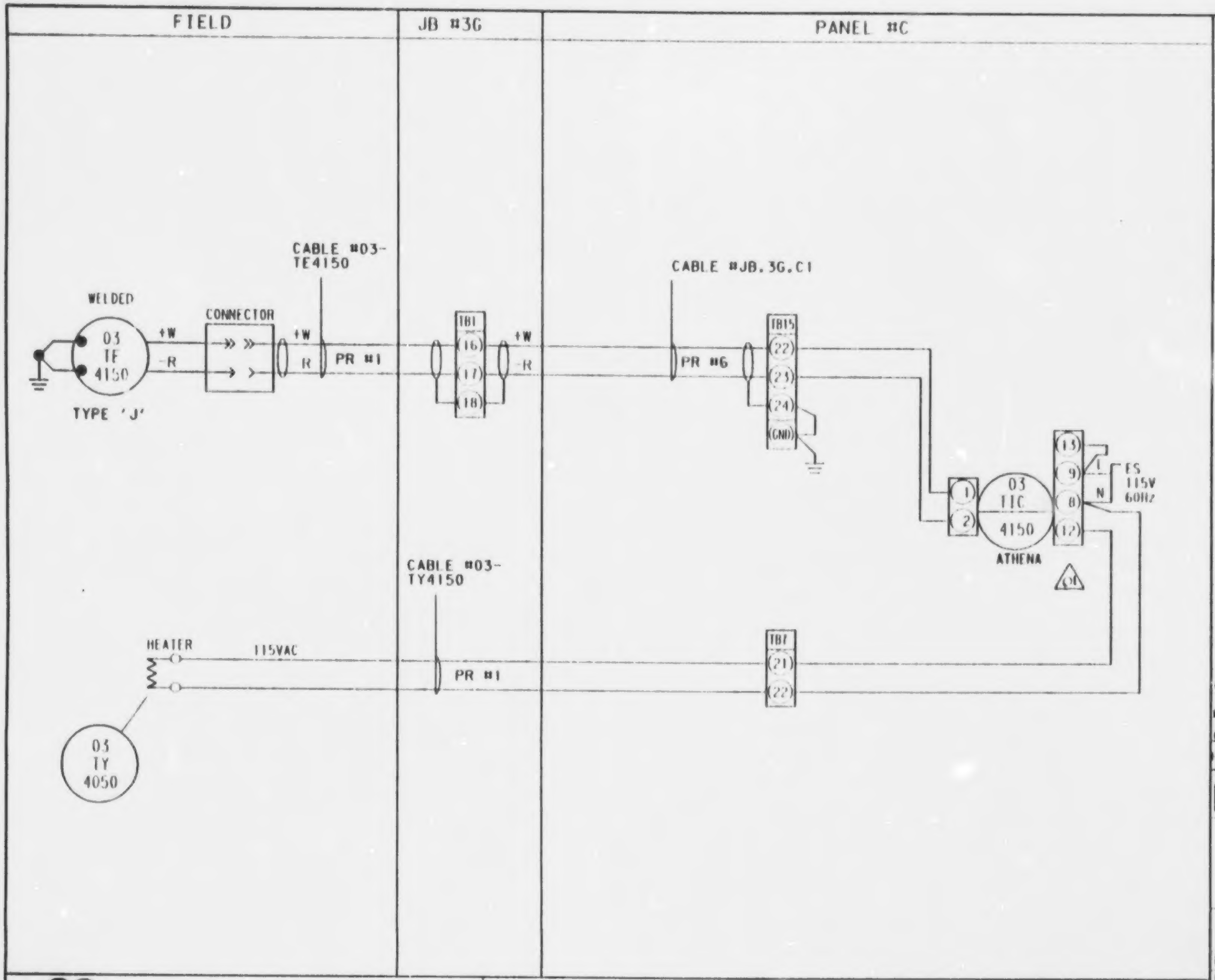

NOTES:

GENERAL NOTES:

A. 24 VAC Power Supply from GFC, Hammond Series Power Supply in panel.

B. 4-20mA signals to computer are shunted by EMR with a resistor to provide voltage signal to computer card.

C. Compatibility of voltage signals to computer programmed by EMR.

REV	DATE	DESCRIPTION	CHK	MEC APP	EMR APP
02	86.09	PHA FINAL	CP	WRC	
01	86.08.4	TIC TERMINAL #'s REVISED	PPW		
00	86.07.14	FOR EMR APPROVAL	PPW		✓

Energy, Mines and Resources Canada — Énergie, Mines et Ressources Canada

LOOP DIAGRAM
03-T-4150

AREA 3
REACTOR AND SAMPLING SYSTEM

EMR COPROCESSING PILOT PLANT
PP3

PID No. D-3-3 -MP-1
DRAWN CAD DATE
CHKD
DESIGN
REV 02

Monenco Consultants Limited

WORK ORDER No. DSS 8279-3

REG. No. 204185

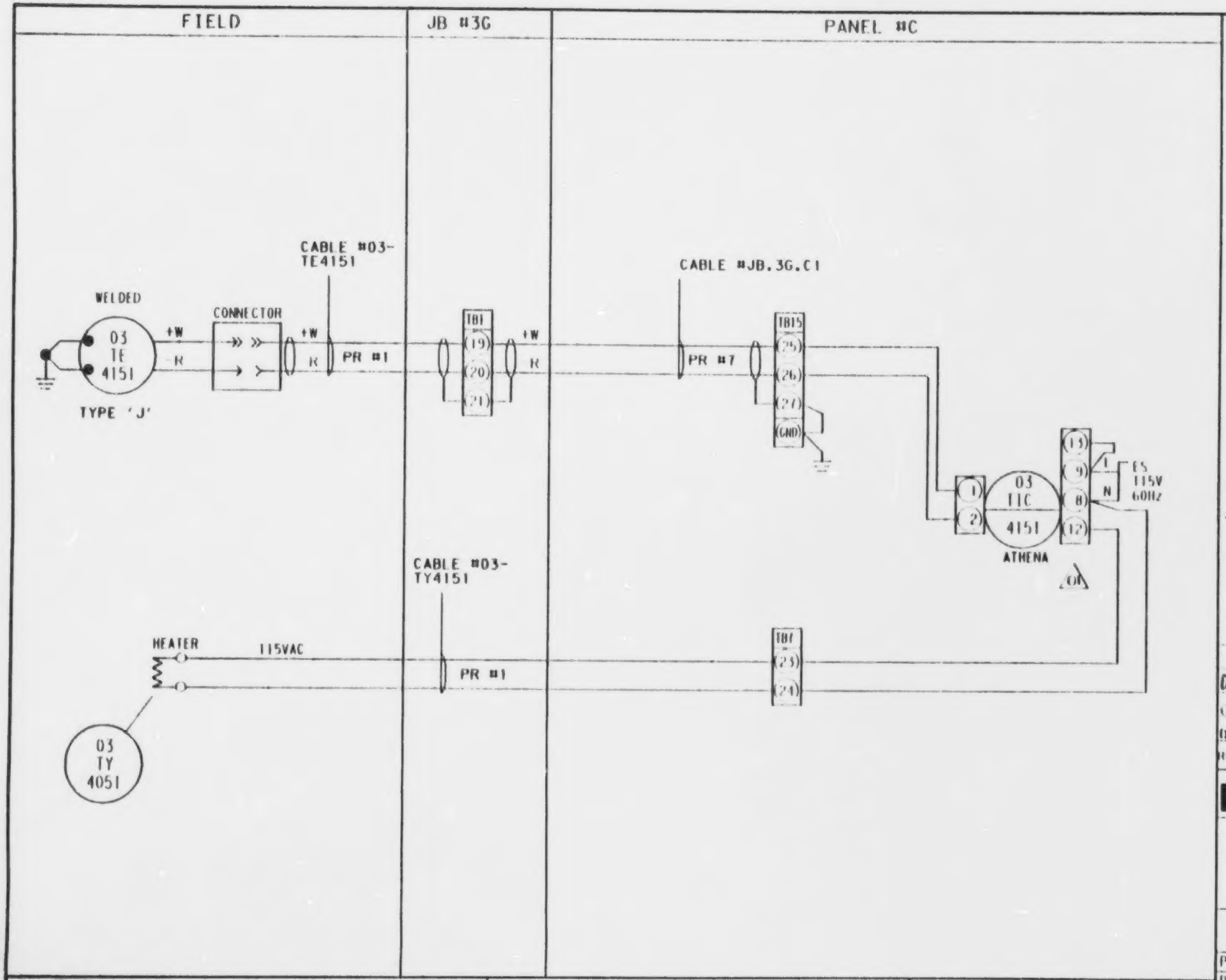

NOTES:

GENERAL NOTES:

A. 24 VAC Power Supply from GEC, Hammond Series Power Supply in panel.

B. 4-20mA signals to computer are shunted by EMR with a resistor to provide voltage signal to computer card.

C. Compatibility of voltage signals to computer programmed by EMR.

REV	DATE	DESCRIPTION	CHK	MEC APP	EMR APP
02	86.09	PRL FINAL	CP		
01	86.08.4	TC TERMINAL #'s REVISED	RAW		
00	86.01.14	FOR EMR APPROVAL	RAW		✓

Energy, Mines and Resources Canada — Énergie, Mines et Ressources Canada

LOOP DIAGRAM
03-T-4151
AREA 3
REACTOR AND SAMPLING SYSTEM

EMR COPROCESSING PILOT PLANT
PP3

PID No. D-3-3 -MP-1
DRAWN | CAD | DATE
CHKD | REV
DESIGN

Monenco Consultants Limited | WORK ORDER No. DSS 8279-3 | REG. No. 204186

LOOP18

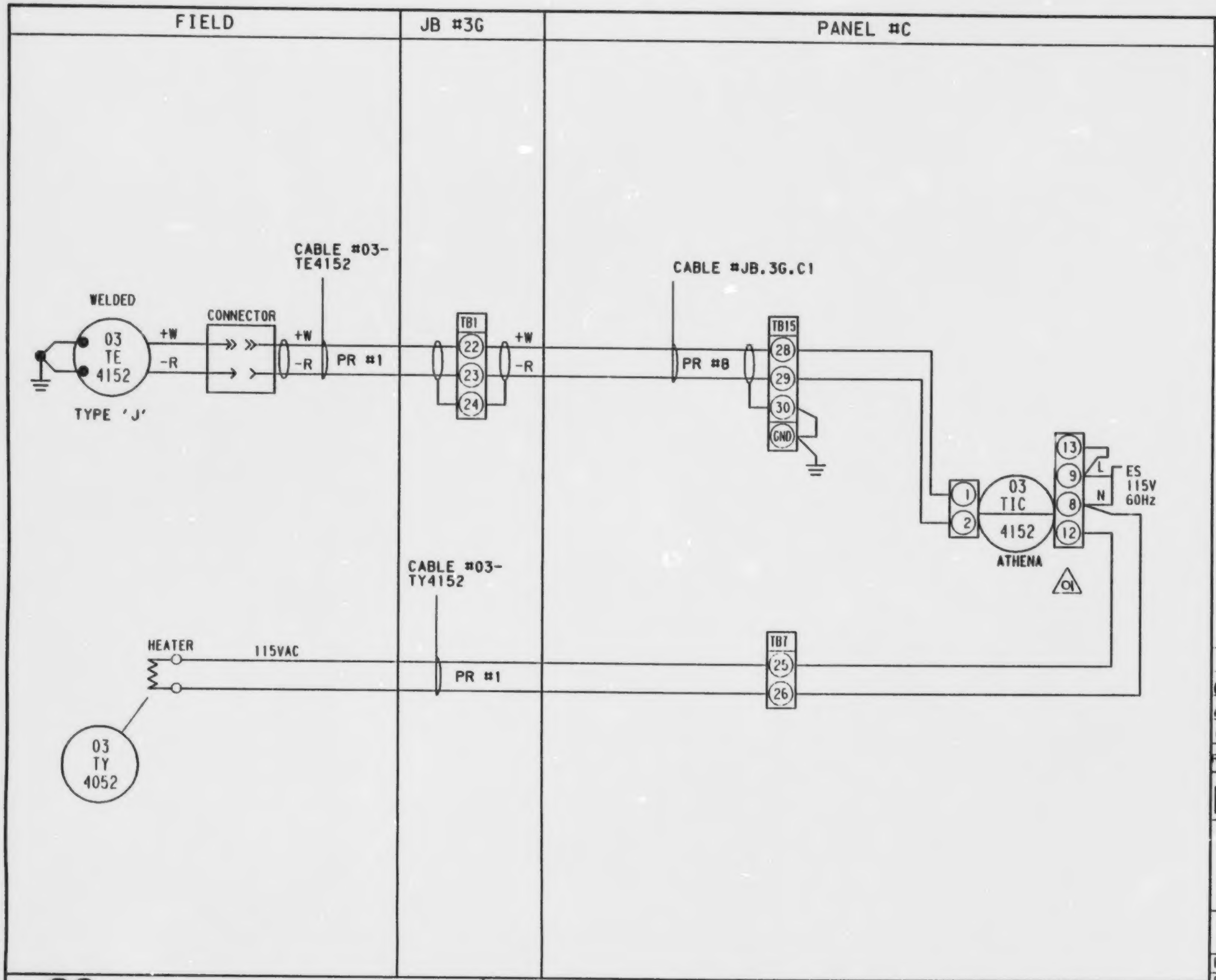

NOTES:

GENERAL NOTES:

A. 24 VAC Power Supply from GFC, Hammond Series Power Supply in panel.

B. 4-20mA signals to computer are shunted by EMR with a resistor to provide voltage signal to computer card.

C. Compatibility of voltage signals to computer programmed by EMR.

REV	DATE	DESCRIPTION	CHK	MEC APP	EMR APP
02	86.09	PH.1 FINAL	[illegible]	[illegible]	
01	86.08.4	TIC TERMINAL #'S REVISED	PPW		
00	86.07.14	FOR EMR APPROVAL	RPW		/

Energy, Mines and Resources Canada — Énergie, Mines et Ressources Canada

LOOP DIAGRAM
03-T-4152
AREA 3
REACTOR AND SAMPLING SYSTEM

EMR COPROCESSING PILOT PLANT PP3

PID No. D-3-3 -MP-1
DRAWN | CAD | DATE
CHKD
DESIGN
REV 02

Monenco Consultants Limited | WORK ORDER No. DSS 8279-3 | REG. No. 204187

LOOP18 B

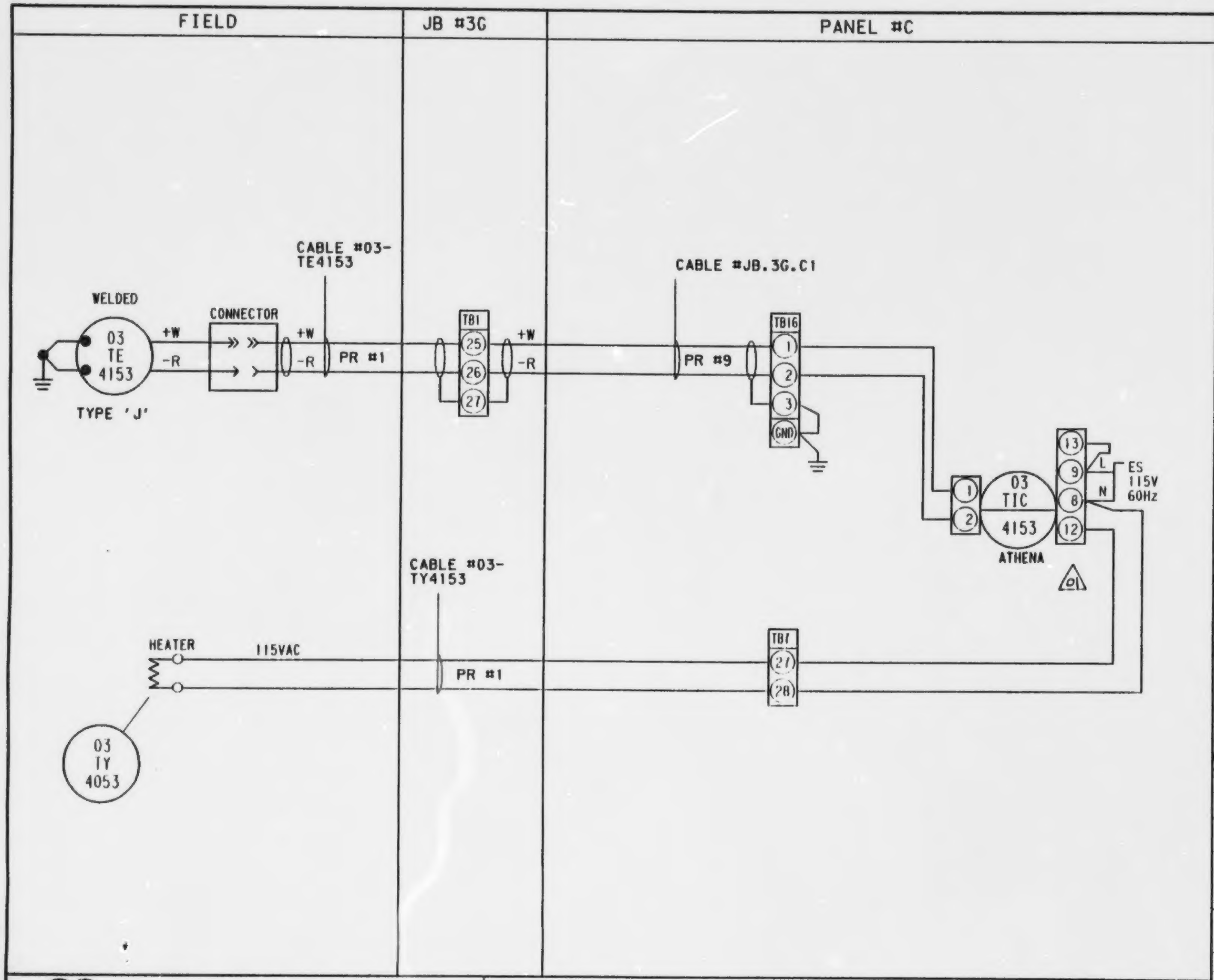

NOTES:

GENERAL NOTES:

A. 24 VAC Power Supply from GFC, Hammond Series Power Supply in panel.

B. 4-20mA signals to computer are shunted by EMR with a resistor to provide voltage signal to computer card.

C. Compatibility of voltage signals to computer programmed by EMR.

REV	DATE	DESCRIPTION	CHK	MEC APP	EMR APP
02	86.09	PH 4 FINAL	CP	[illegible]	
01	86.08.4	TIC TERMINAL #5 REVISED	RPW		
00	86.02.14	FOR EMR APPROVAL	[illegible]		✓

Energy, Mines and Resources Canada — Énergie, Mines et Ressources Canada

LOOP DIAGRAM
03-T-4153
AREA 3
REACTOR AND SAMPLING SYSTEM

EMR COPROCESSING PILOT PLANT
PP3

PID No. D-3-3 -MP-1
DRAWN | CAD | DATE
CHKD
DESIGN
REV 02

Monenco Consultants Limited | WORK ORDER No. DSS 8279-3 | REG. No. 204188

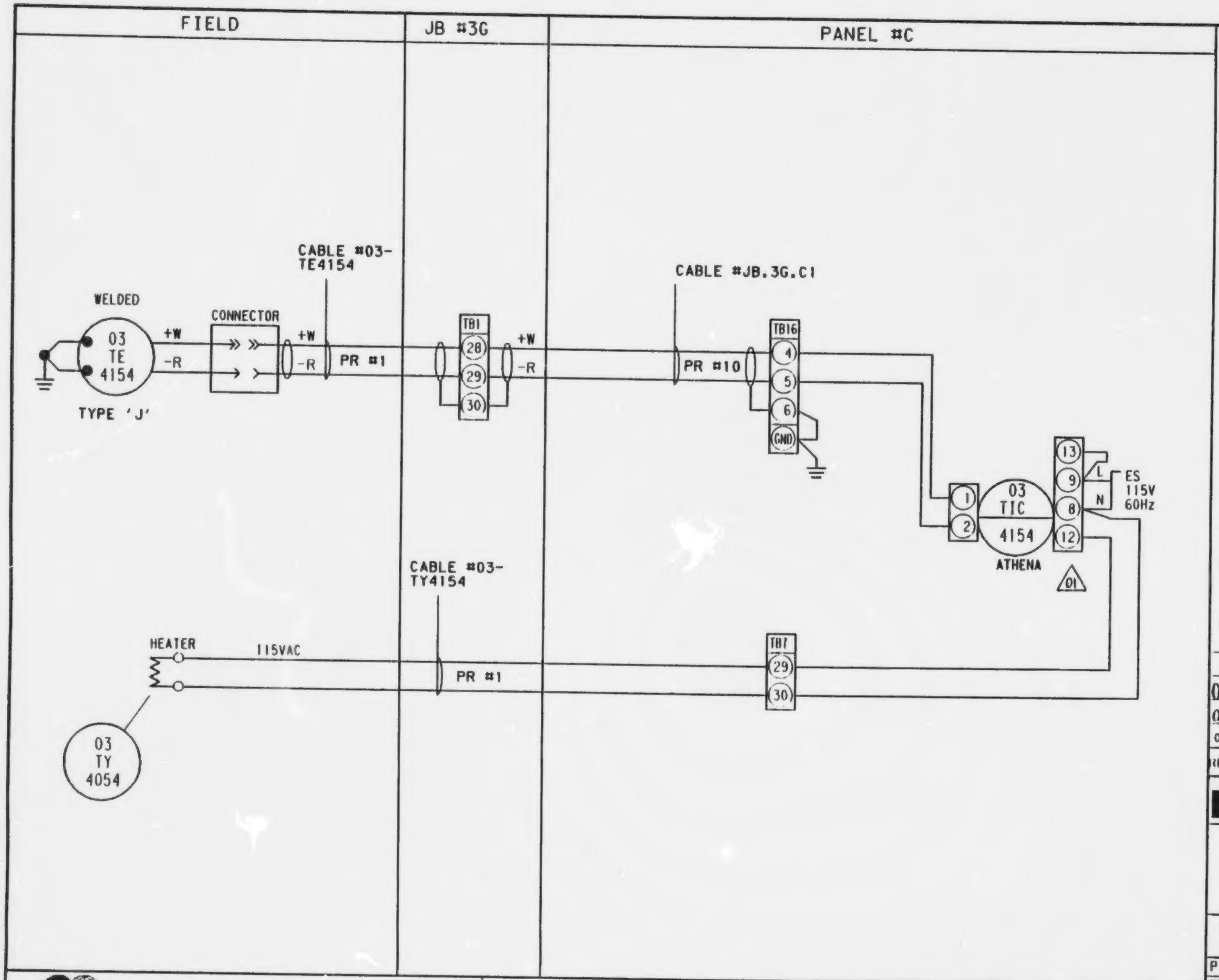

NOTES:

GENERAL NOTES:

A. 24 VAC Power Supply from GFC, Hammond Series Power Supply in panel.

B. 4-20mA signals to computer are shunted by EMR with a resistor to provide voltage signal to computer card.

C. Compatibility of voltage signals to computer programmed by EMR.

REV	DATE	DESCRIPTION	CHK	MEC APP	EMR APP
02	86.09	PH.1 FINAL			
01	86.08.6	TIC TERMINAL #'s REVISED			
00	JUL 86.14	FOR EMR APPROVAL	RPW		/

Energy, Mines and Resources Canada / Énergie, Mines et Ressources Canada

LOOP DIAGRAM
03-T-4154
AREA 3
REACTOR AND SAMPLING SYSTEM

EMR COPROCESSING PILOT PLANT
PP3

PID No.	D-3-3 -MP-1		
DRAWN	CAD	DATE	
CHKD			REV
DESIGN			02

Monenco Consultants Limited | WORK ORDER No. DSS 8279-3 | REG. No. 204189

LOOP18

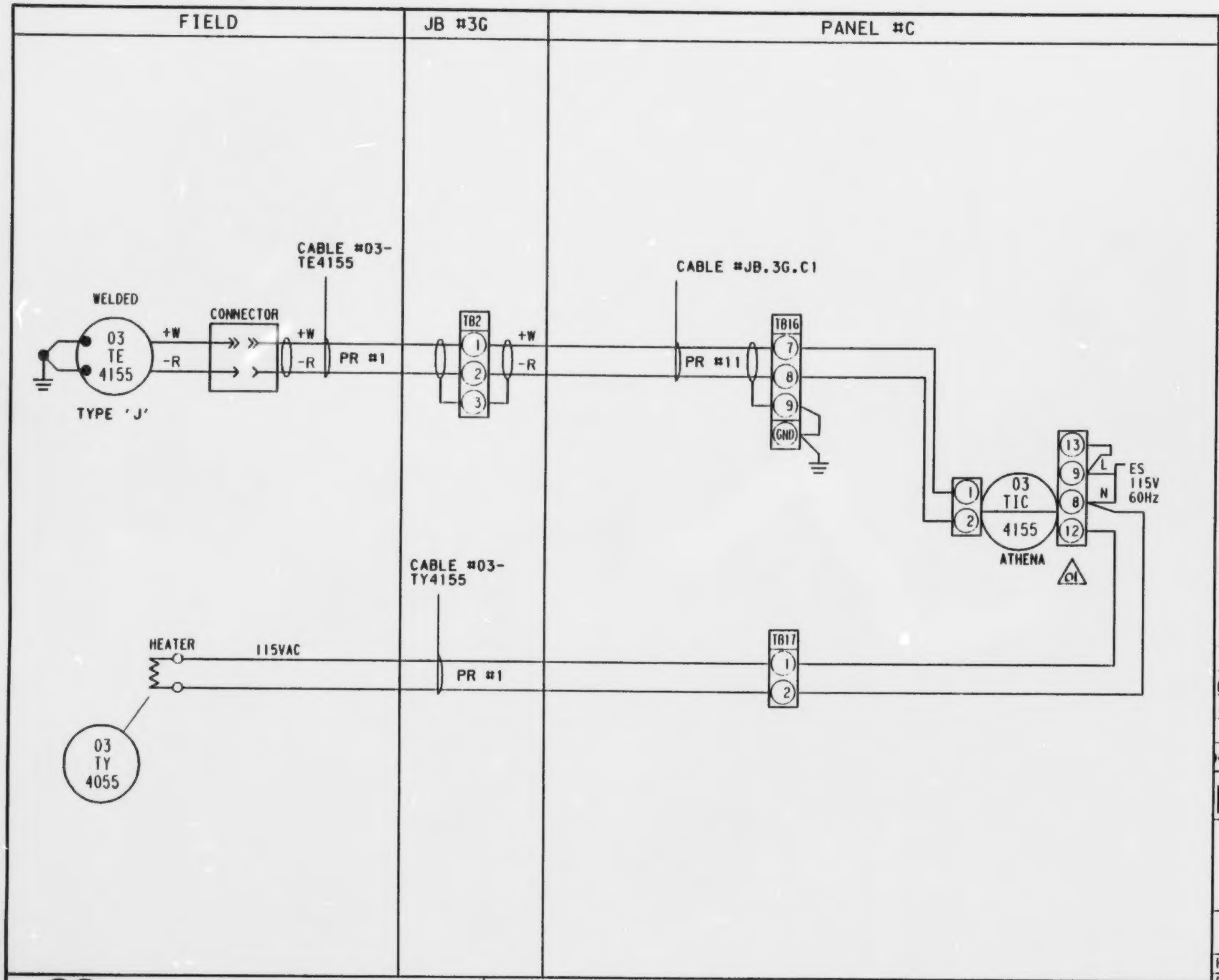

NOTES:

GENERAL NOTES:

A. 24 VAC Power Supply from GFC, Hammond Series Power Supply in panel.

B. 4-20mA signals to computer are shunted by EMR with a resistor to provide voltage signal to computer card.

C. Compatibility of voltage signals to computer programmed by EMR.

REV	DATE	DESCRIPTION	CHK	MEC APP	EMR APP
02	86.09	PH.1 FINAL	cP	WR	
01	86.08.6	TIC TERMINAL #'s REVISED	BW		
00	JUL 86.14	FOR EMR APPROVAL	RW		✓

Energy, Mines and Resources Canada — Énergie, Mines et Ressources Canada

LOOP DIAGRAM
03-T-4155
AREA 3
REACTOR AND SAMPLING SYSTEM

EMR COPROCESSING PILOT PLANT
PP3

PID No.	D-3-3 -MP-1		
DRAWN	CAD	DATE	86.07.13
CHKD		REV	02
DESIGN			

Monenco Consultants Limited | WORK ORDER No. DSS 8279-3 | REG. No. 204190

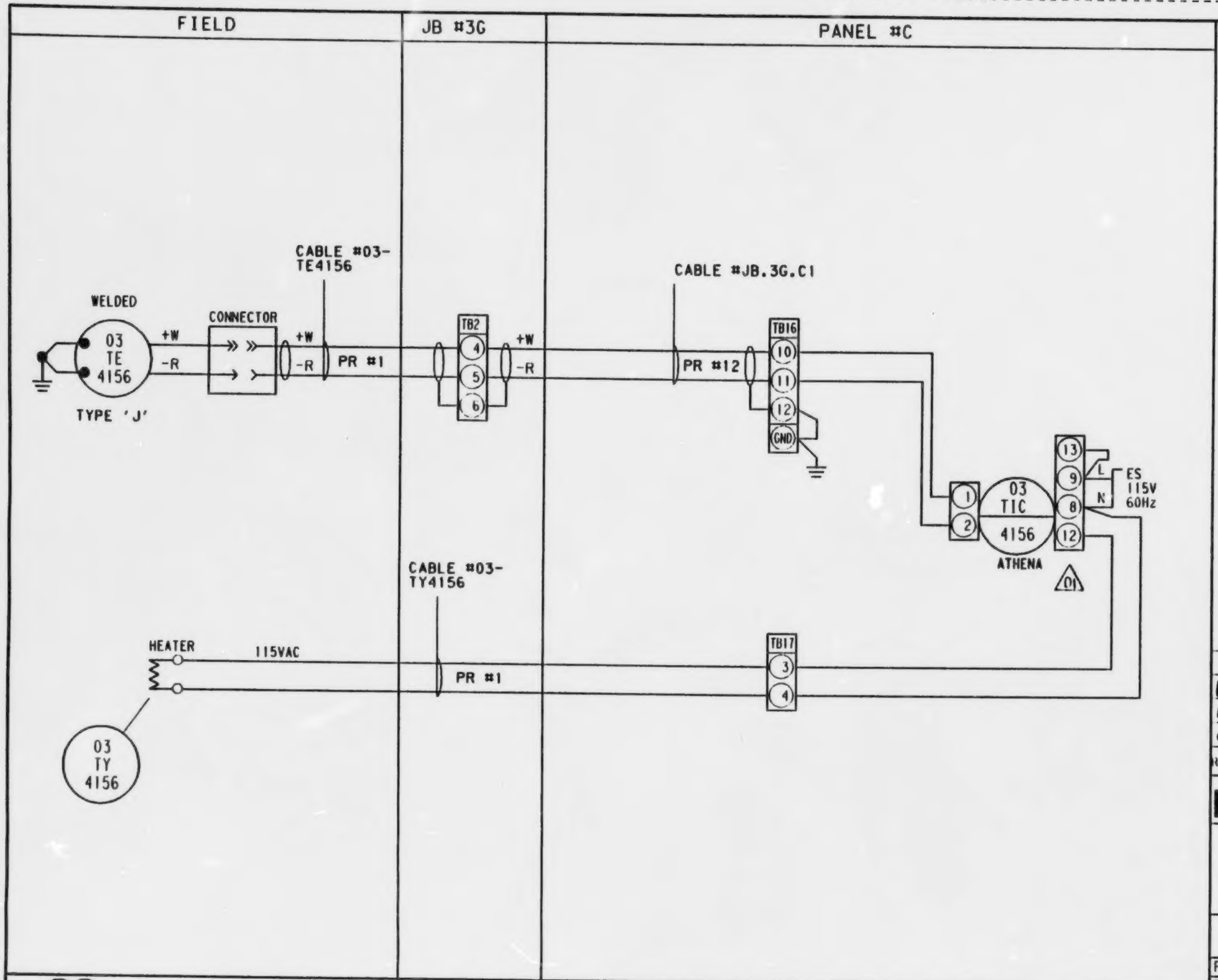

NOTES:

GENERAL NOTES:

A. 24 VAC Power Supply from GFC, Hammond Series Power Supply in panel.

B. 4-20mA signals to computer are shunted by EMR with a resistor to provide voltage signal to computer card.

C. Compatibility of voltage signals to computer programmed by EMR.

REV	DATE	DESCRIPTION	CHK	MEC APP	EMR APP
02	86.09	PH.4 FINAL			
01	86.08.6	TIC TERMINAL #'s REVISED			
00	JUL 86.14	FOR EMR APPROVAL	RW		✓

Energy, Mines and Resources Canada | Énergie, Mines et Ressources Canada

LOOP DIAGRAM
03-T-4156
AREA 3
REACTOR AND SAMPLING SYSTEM

EMR COPROCESSING PILOT PLANT
PP3

PID No.		D-3-3 -MP-1	
DRAWN	CAD	DATE	86.07.13
CHKD			REV
DESIGN			2

Monenco Consultants Limited

WORK ORDER No. DSS 8279-3

REG. No. 204191

LOOP18

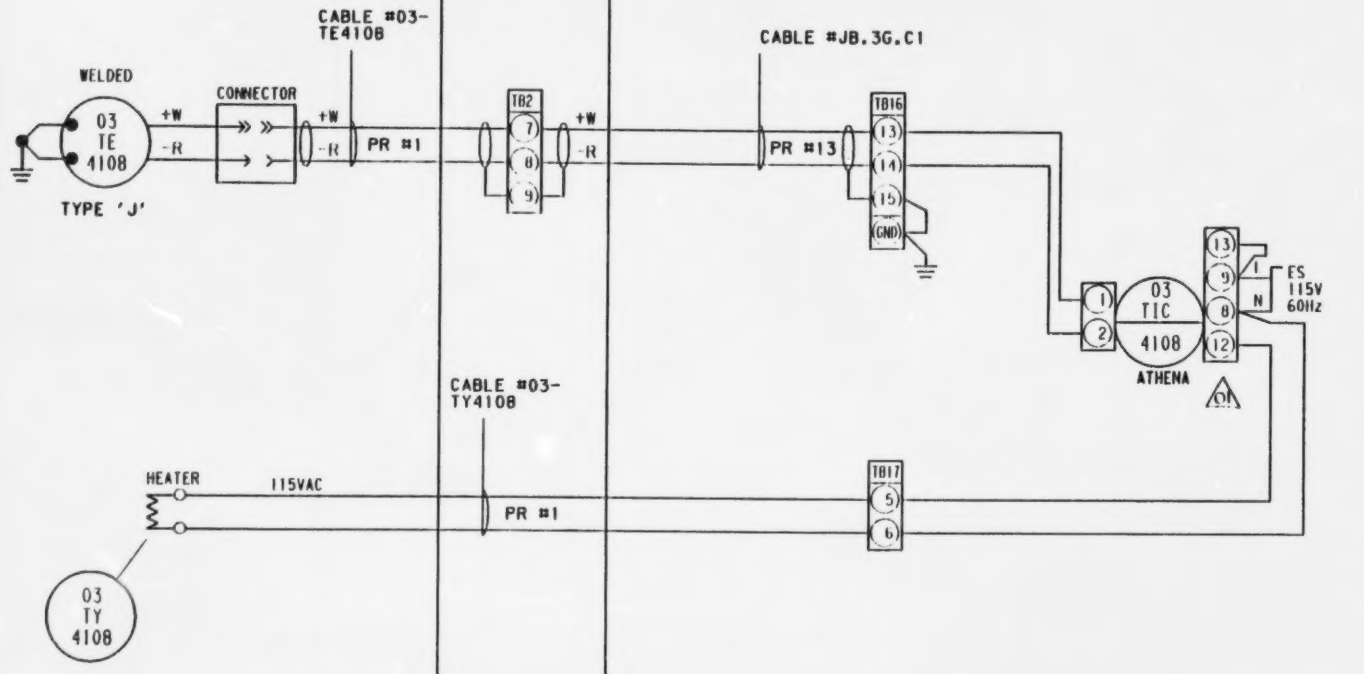

NOTES:

GENERAL NOTES:

A. 24 VAC Power Supply from GFC, Hammond Series Power Supply in panel.

B. 4-20mA signals to computer are shunted by EMR with a resistor to provide voltage signal to computer card.

C. Compatibility of voltage signals to computer programmed by EMR.

REV	DATE	DESCRIPTION	CHK	MEC APP	EMR APP
02	86.09	PH.4 FINAL	CP	[illegible]	
01	86.08.6	TC TERMINAL #'S REVISED	RPW		
00	JUL 86.14	FOR EMR APPROVAL	HW		✓

Energy, Mines and Resources Canada — Énergie, Mines et Ressources Canada

LOOP DIAGRAM
03-T-4108

AREA 3
REACTOR AND SAMPLING SYSTEM

EMR COPROCESSING PILOT PLANT
PP3

PID No.	D-3-3 -MP-2	
DRAWN	CAD	DATE 86.07.13
CHKD		REV 02
DESIGN		

Monenco Consultants Limited

WORK ORDER No. DSS 8279-3

REG. No. 204192

LOOP18

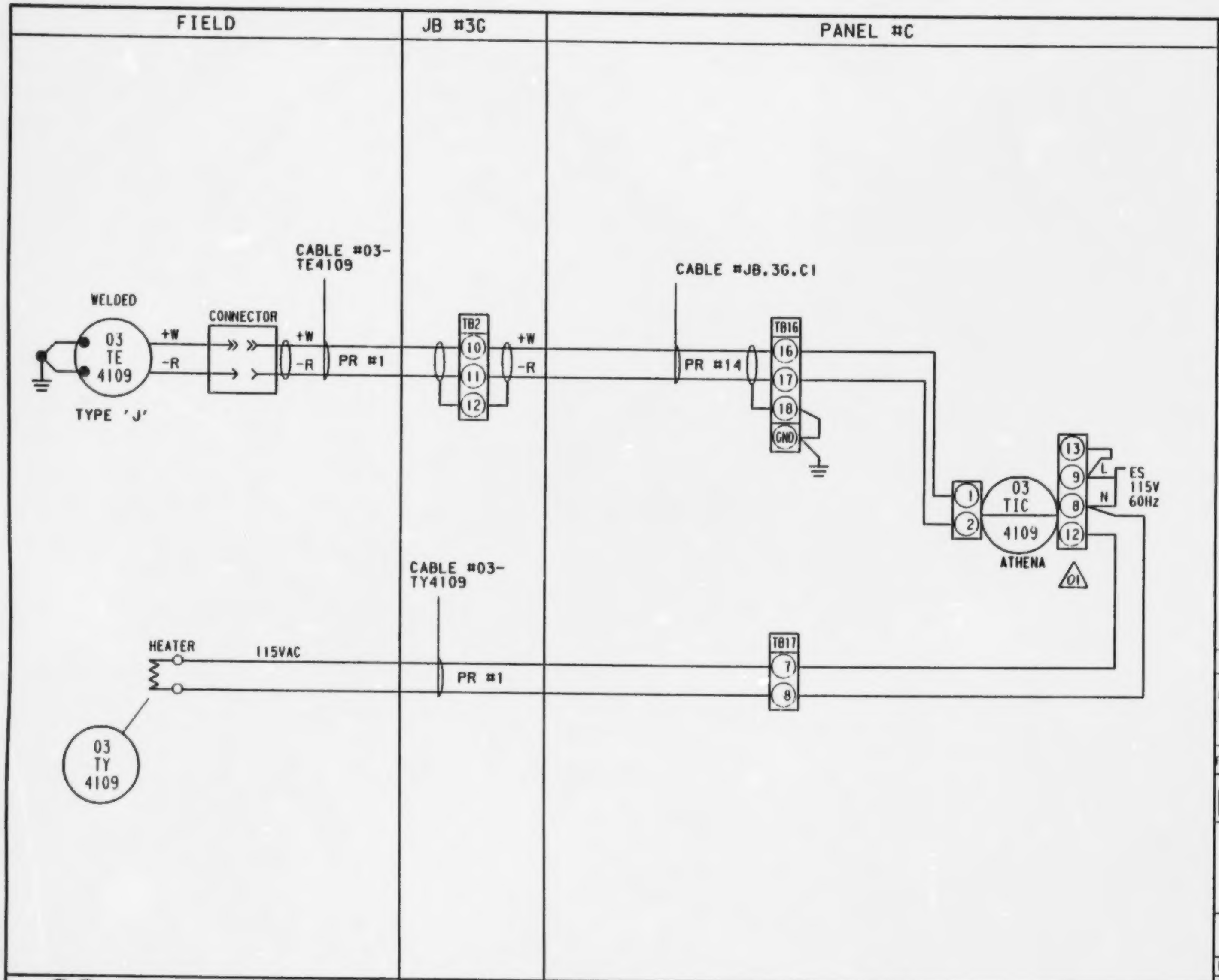

NOTES:

GENERAL NOTES:

A. 24 VAC Power Supply from GFC, Hammond Series Power Supply in panel.

B. 4-20mA signals to computer are shunted by EMR with a resistor to provide voltage signal to computer card.

C. Compatibility of voltage signals to computer programmed by EMR.

REV	DATE	DESCRIPTION	CHK	MEC APP	EMR APP
02	86.09	PH.1 FINAL	CP		
01	86.08.6	TIC TERMINAL #5 REVISED	RM		
00	JUL 86.14	FOR EMR APPROVAL	RW		✓

Energy, Mines and Resources Canada — Énergie, Mines et Ressources Canada

LOOP DIAGRAM
03-T-4109
AREA 3
REACTOR AND SAMPLING SYSTEM

EMR COPROCESSING PILOT PLANT
PP3

PID No. D-3-3 -MP-2
DRAWN CAD DATE 86.07.14
CHKD
DESIGN
REV 02

Monenco Consultants Limited

WORK ORDER No. DSS 8279-3

REG. No. 204193

LOOP18

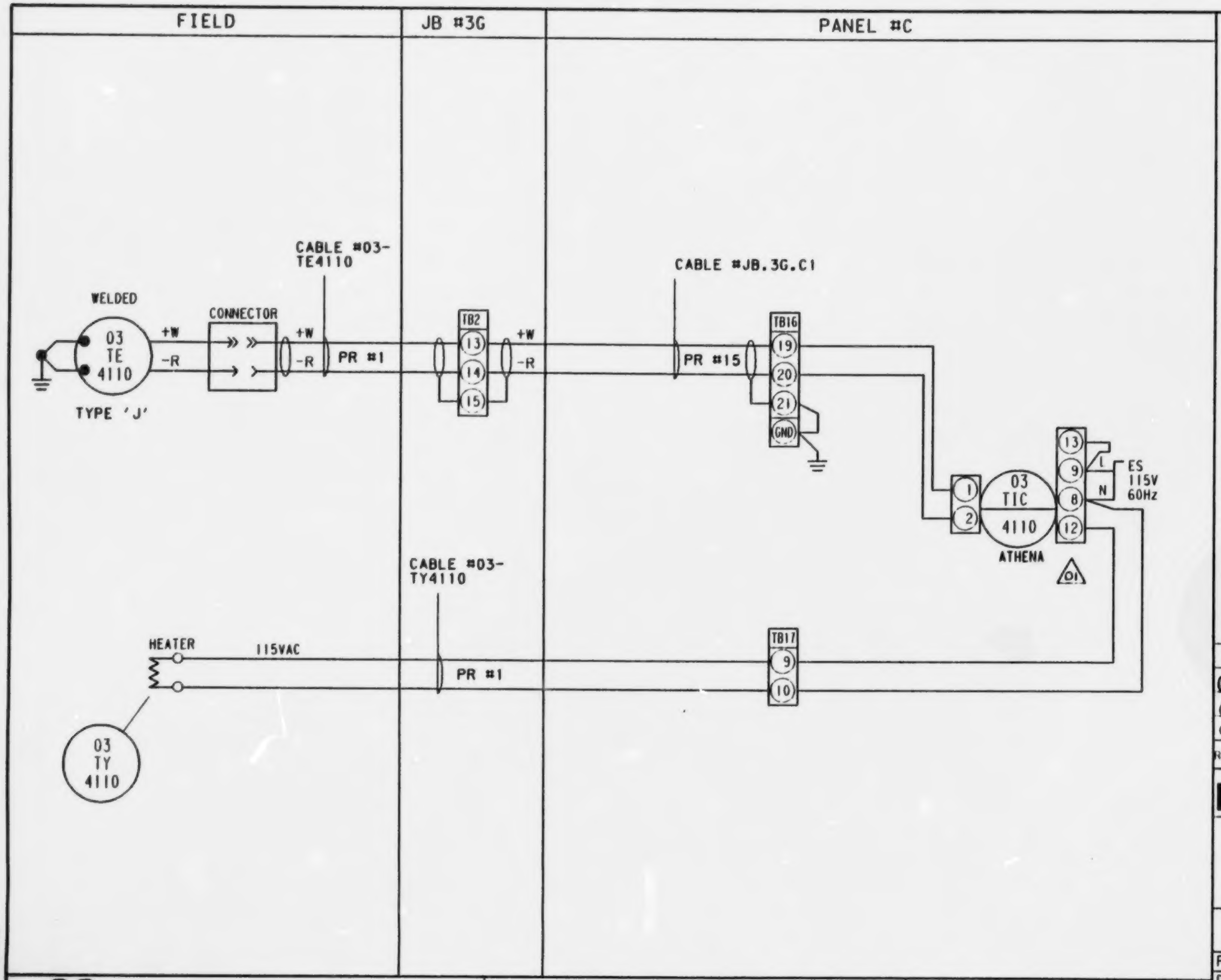

NOTES:

GENERAL NOTES:

A. 24 VAC Power Supply from GFC, Hammond Series Power Supply in panel.

B. 4-20mA signals to computer are shunted by EMR with a resistor to provide voltage signal to computer card.

C. Compatibility of voltage signals to computer programmed by EMR.

REV	DATE	DESCRIPTION	CHK	MEC APP	EMR APP
02	86.09	PH.1 FINAL	CP	[illegible]	
01	86.08.6	TIC TERMINAL #3 REVISED	RAJ		
00	JUL 86.14	FOR EMR APPROVAL	RW		✓

Energy, Mines and Resources Canada — Énergie, Mines et Ressources Canada

LOOP DIAGRAM
03-T-4110
AREA 3
REACTOR AND SAMPLING SYSTEM

EMR COPROCESSING PILOT PLANT
PP3

PID No. D-3-3 -MP-2
DRAWN CAD DATE 86.07.13
CHKD REV 02
DESIGN

Monenco Consultants Limited | WORK ORDER No. DSS 8279-3 | REG. No. 204194

LOOP18

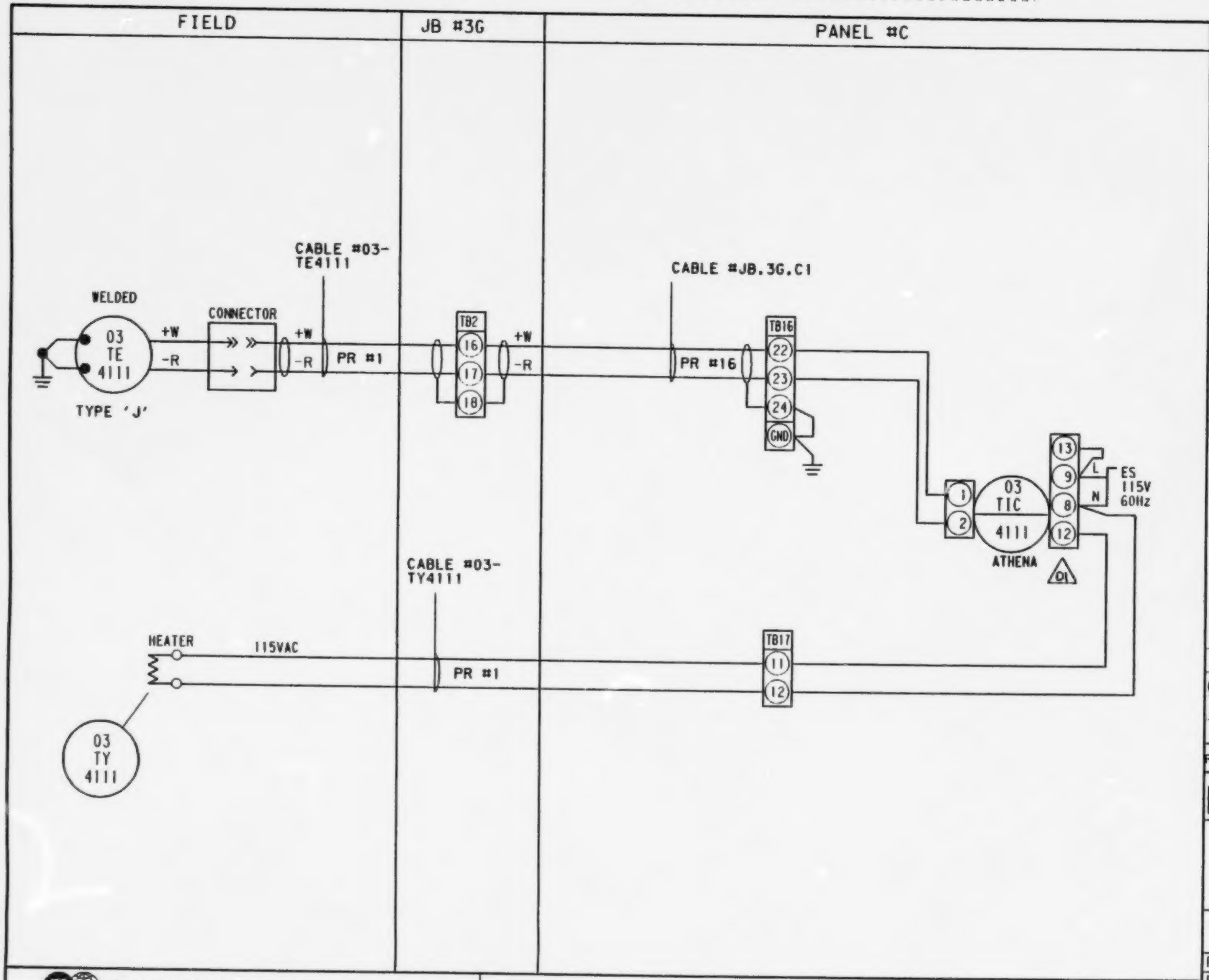

NOTES:

GENERAL NOTES:

A. 24 VAC Power Supply from GFC, Hammond Series Power Supply in panel.

B. 4-20mA signals to computer are shunted by EMR with a resistor to provide voltage signal to computer card.

C. Compatibility of voltage signals to computer programmed by EMR.

REV	DATE	DESCRIPTION	CHK	MEC APP	EMR APP
02	86.09	PH.1 FINAL			
01	86.08.6	TIC TERMINAL #'S REVISED			
00	JUL 86.14	FOR EMR APPROVAL	RW		✓

Energy, Mines and Resources Canada / Énergie, Mines et Ressources Canada

LOOP DIAGRAM
03-T-4111
AREA 3
REACTOR AND SAMPLING SYSTEM

EMR COPROCESSING PILOT PLANT
PP3

PID No.	D-3-3 -MP-2
DRAWN	CAD
DATE	86.07.13
CHKD	
DESIGN	
REV	02

Monenco Consultants Limited | WORK ORDER No. DSS 8279-3 | REG. No. 204195

LOOP18

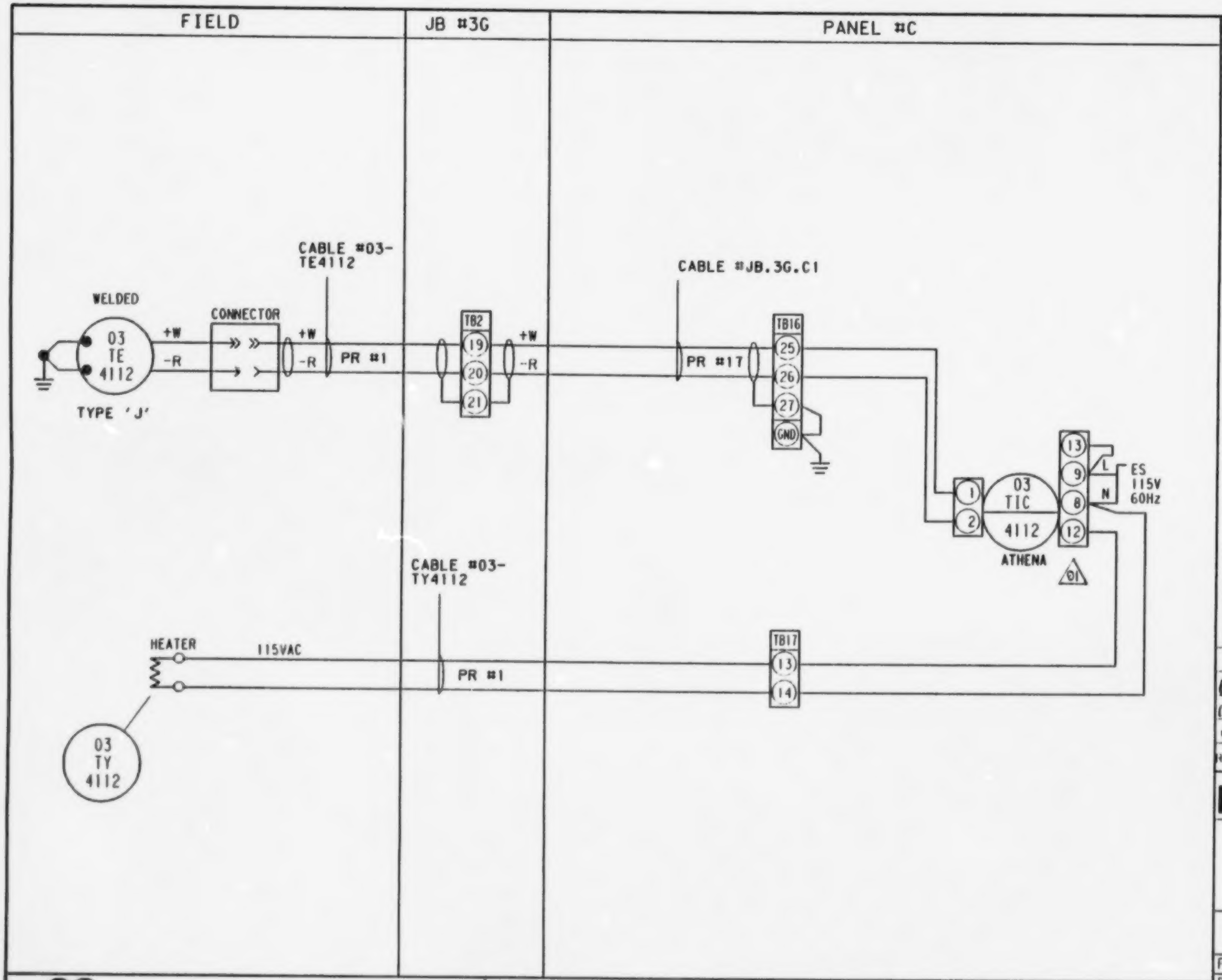

NOTES:

GENERAL NOTES:

A. 24 VAC Power Supply from GFC, Hammond Series Power Supply in panel.

B. 4-20mA signals to computer are shunted by EMR with a resistor to provide voltage signal to computer card.

C. Compatibility of voltage signals to computer programmed by EMR.

REV	DATE	DESCRIPTION	CHK	MEC APP	EMR APP
02	86.09	PH.1 FINAL	CP		
01	86.08.6	TK TITANIUM #1 REVISED			
00	JUL 86.14	FOR EMR APPROVAL	RW		✓

Energy, Mines and Resources Canada — Energie, Mines et Ressources Canada

LOOP DIAGRAM
03-T-4112

AREA 3
REACTOR AND SAMPLING SYSTEM

EMR COPROCESSING PILOT PLANT
PP3

PID No.	D-3-3 -MP-2		
DRAWN	CAD	DATE	86.07.13
CHKD		REV	02
DESIGN			

LOOP18

Monenco Consultants Limited | WORK ORDER No. DSS 8279-3 | REG. No. 204196

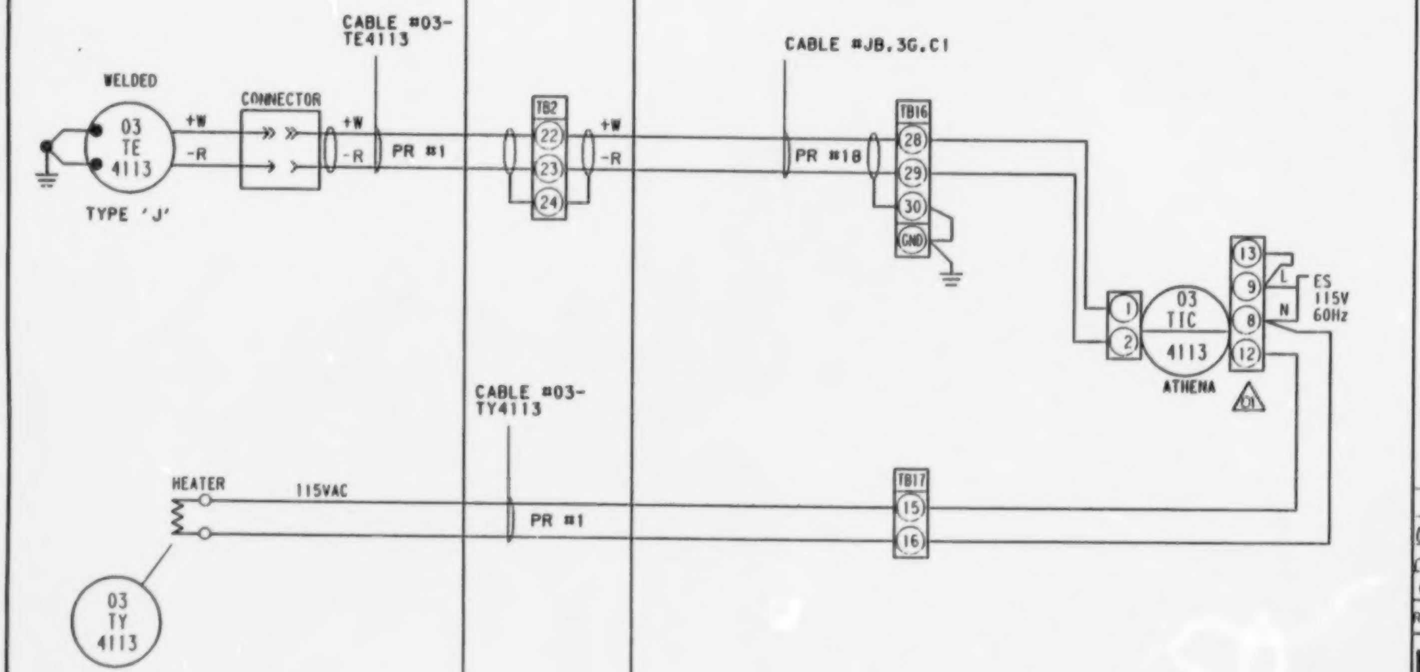

NOTES:

GENERAL NOTES:

A. 24 VAC Power Supply from GFC, Hammond Series Power Supply in panel.

B. 4-20mA signals to computer are shunted by EMR with a resistor to provide voltage signal to computer card.

C. Compatibility of voltage signals to computer programmed by EMR.

REV	DATE	DESCRIPTION	CHK	MEC APP	EMR APP
02	86.09	PH.1 FINAL	P	HMR	
01	86.08.6	IIC TERMINAL #'s REVISED	RRJ		
00	JUL 86.14	FOR EMR APPROVAL	RW		✓

Energy, Mines and Resources Canada / Énergie, Mines et Ressources Canada

LOOP DIAGRAM
03-T-4113
AREA 3
REACTOR AND SAMPLING SYSTEM

EMR COPROCESSING PILOT PLANT
PP3

PID No.	D-3-3 -MP-2
DRAWN	CAD
DATE	86.07.13
CHKD	
DESIGN	
REV	02

Monenco Consultants Limited

WORK ORDER No. DSS 8279-3

REG. No. 204197

LOOP18

B

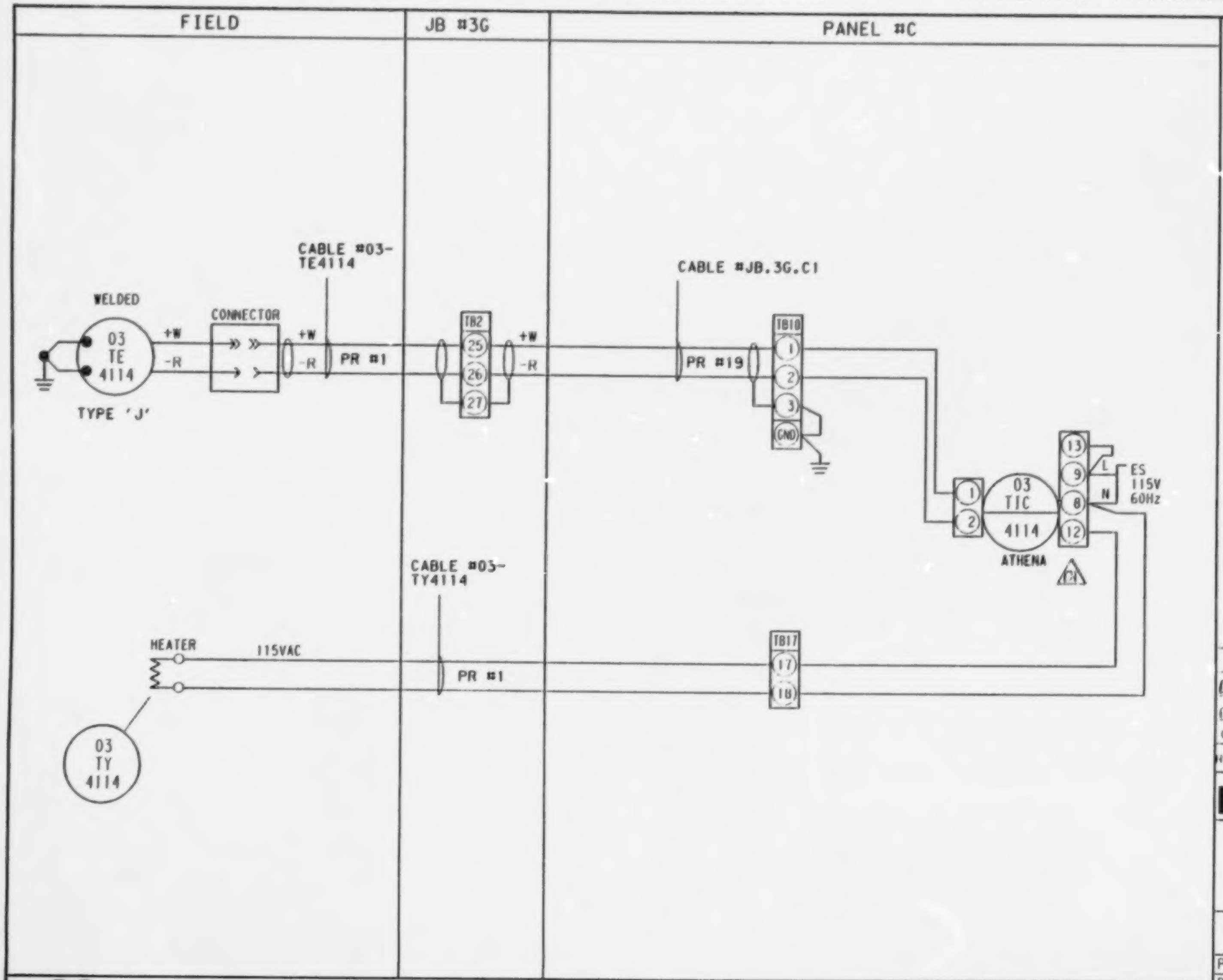

NOTES:

GENERAL NOTES:

A. 24 VAC Power Supply from GFC, Hammond Series Power Supply in panel.

B. 4-20mA signals to computer are shunted by EMR with a resistor to provide voltage signal to computer card.

C. Compatibility of voltage signals to computer programmed by EMR.

REV	DATE	DESCRIPTION	CHK	MEC APP	EMR APP
02	86.09	PH.1 FINAL	CP		
01	86.08.6	IK TERMINAL #S REVISED			
00	JUL 86.14	FOR EMR APPROVAL	RW		✓

Energy, Mines and Resources Canada — Energie, Mines et Ressources Canada

LOOP DIAGRAM
03-T-4114

AREA 3
REACTOR AND SAMPLING SYSTEM

EMR COPROCESSING PILOT PLANT
PP3

PID No. D-3-3 -MP-2
DRAWN CAD DATE 86.07.13
CHKD
DESIGN
REV 02

Monenco Consultants Limited

WORK ORDER No. DSS 8279-3

REG. No. 204198

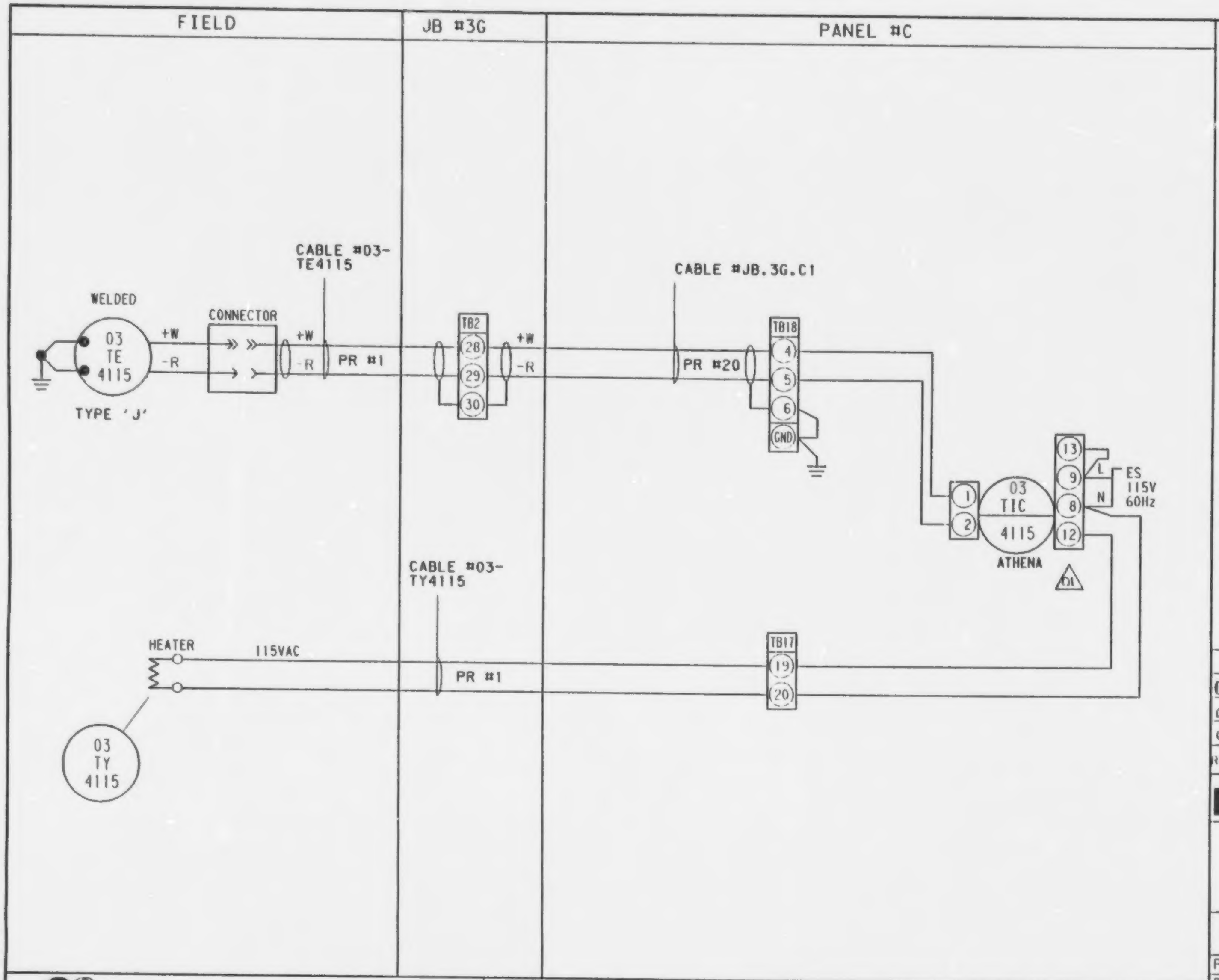

NOTES:

GENERAL NOTES:

A. 24 VAC Power Supply from GFC, Hammond Series Power Supply in panel.

B. 4-20mA signals to computer are shunted by EMR with a resistor to provide voltage signal to computer card.

C. Compatibility of voltage signals to computer programmed by EMR.

REV	DATE	DESCRIPTION	CHK	MEC APP	EMR APP
02	86.09	PH.1 FINAL			
01	86.08.6	TIC TERMINAL #'S REVISED			
00	JUL 86.14	FOR EMR APPROVAL	RW		✓

Energy, Mines and Resources Canada — Énergie, Mines et Ressources Canada

LOOP DIAGRAM 03-T-4115

AREA 3

REACTOR AND SAMPLING SYSTEM

EMR COPROCESSING PILOT PLANT PP3

PID No. D-3-3 -MP-2

DRAWN CAD DATE 86.07.13

CHKD REV 02

DESIGN

LOOP18

Monenco Consultants Limited

WORK ORDER No. DSS 8279-3

REG. No. 204199

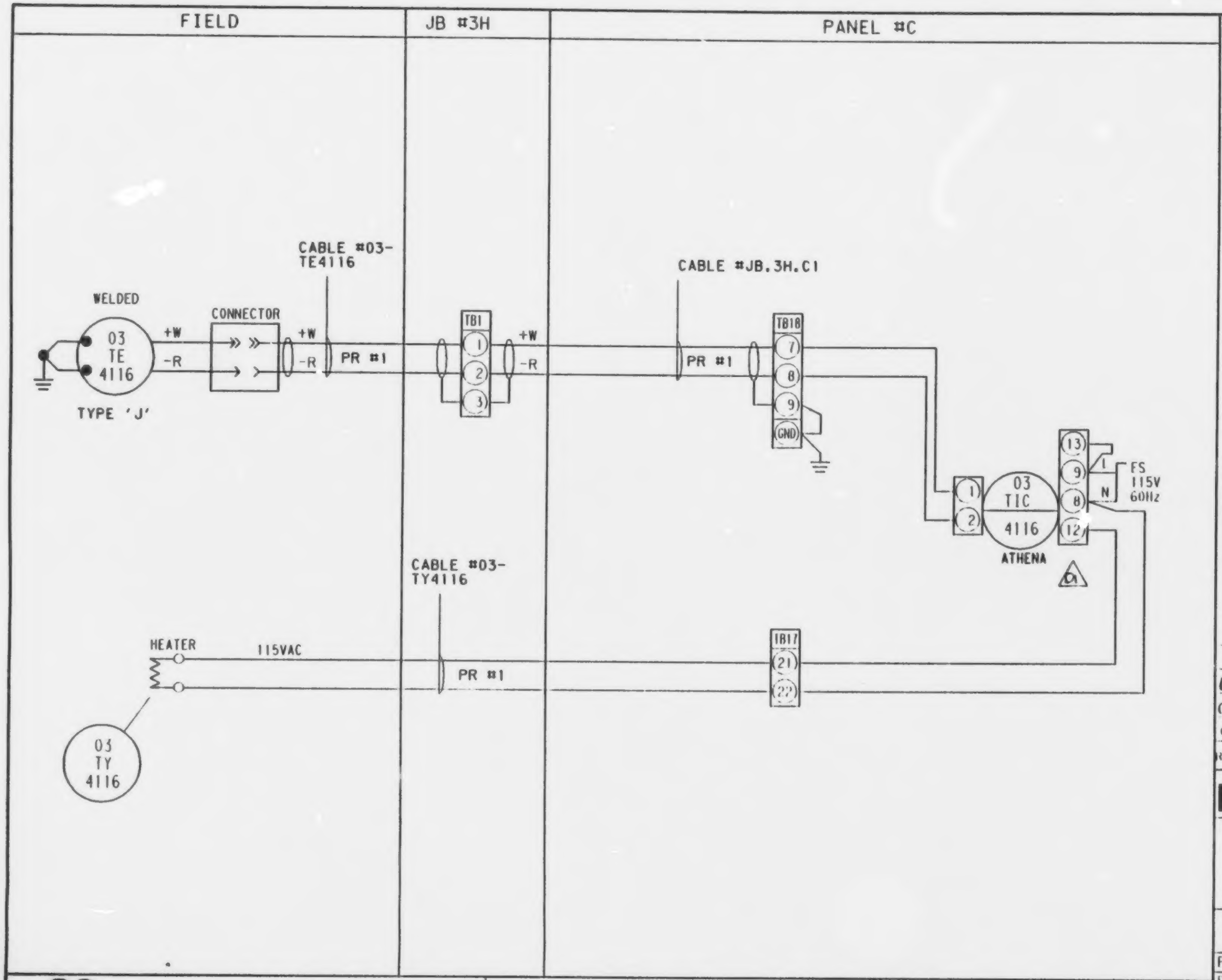

NOTES:

GENERAL NOTES:

A. 24 VAC Power Supply from GFC, Hammond Series Power Supply in panel.

B. 4-20mA signals to computer are shunted by EMR with a resistor to provide voltage signal to computer card.

C. Compatibility of voltage signals to computer programmed by EMR.

REV	DATE	DESCRIPTION	CHK	MEC APP	EMR APP
02	86.09	PII.4 FINAL			
01	86.08.6	TC TERMINAL #'S REVISED	RAJ		
00	JUN 86.14	FOR EMR APPROVAL	HW		✓

Energy, Mines and Resources Canada — Énergie, Mines et Ressources Canada

LOOP DIAGRAM
03-T-4116

AREA 3
REACTOR AND SAMPLING SYSTEM

EMR COPROCESSING PILOT PLANT
PP3

PID No. D-3-3 -MP-2
DRAWN CAD DATE 86.07.13
CHKD
DESIGN
REV 02

Monenco Consultants Limited | WORK ORDER No. DSS 8279-3 | REG. No. 204200

LOOP18

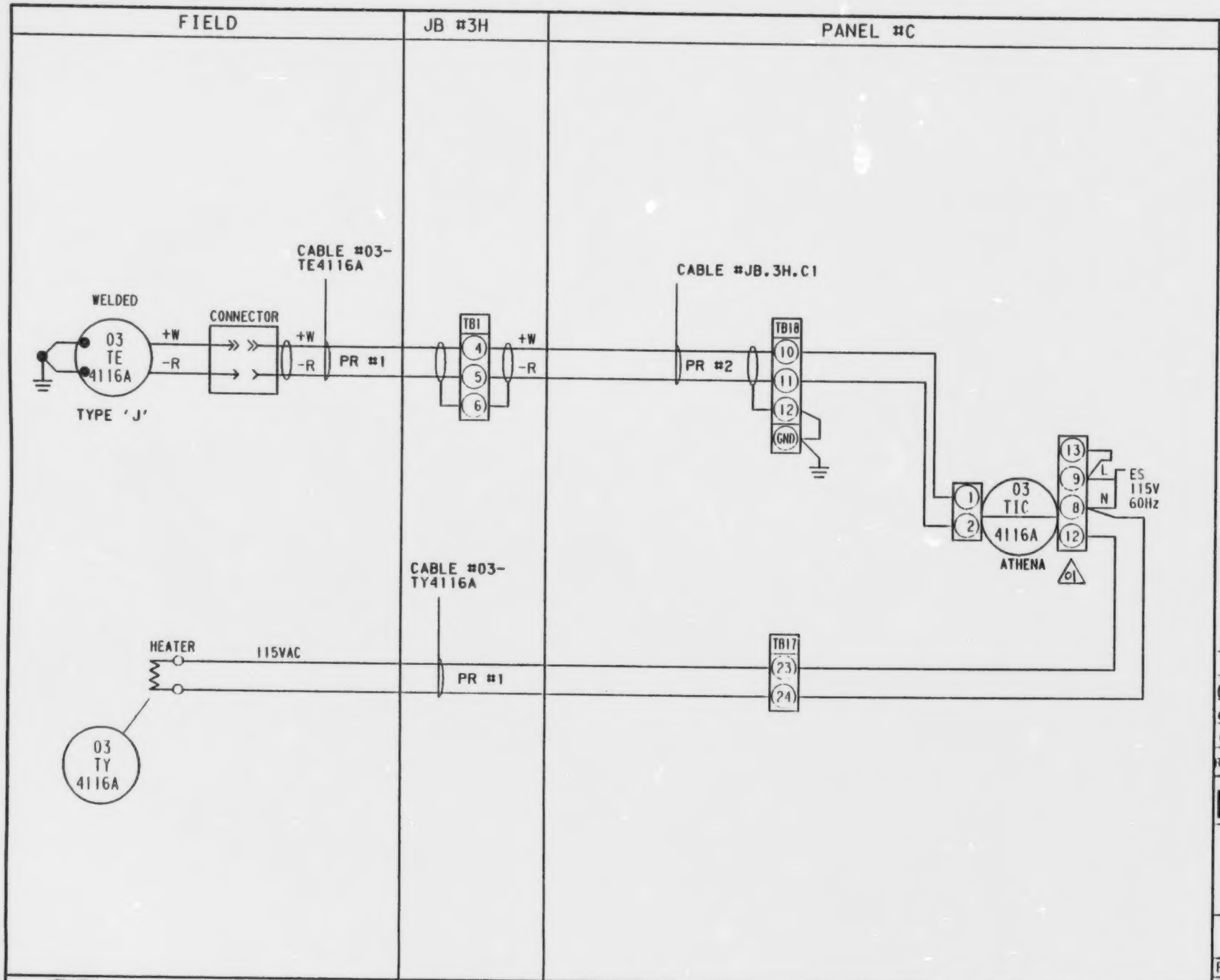

NOTES:

GENERAL NOTES:

A. 24 VAC Power Supply from GFC, Hammond Series Power Supply in panel.

B. 4-20mA signals to computer are shunted by EMR with a resistor to provide voltage signal to computer card.

C. Compatibility of voltage signals to computer programmed by EMR.

REV	DATE	DESCRIPTION	CHK	MEC APP	EMR APP
02	86.09	AU.1 FINAL	cP	[illegible]	
01	86.08.6	TIC TERMINAL #'s REVISED	RAJ		
00	JUL 86.14	FOR EMR APPROVAL	RW		✓

Energy, Mines and Resources Canada — Énergie, Mines et Ressources Canada

LOOP DIAGRAM
03-T-4116A

AREA 3
REACTOR AND SAMPLING SYSTEM

EMR COPROCESSING PILOT PLANT
PP3

PID No.	D-3-3 -MP-2
DRAWN	CAD
DATE	86.07.13
CHKD	
DESIGN	
REV	02

LOOP18

Monenco Consultants Limited

WORK ORDER No. DSS 8279-3

REG. No. 204201

B

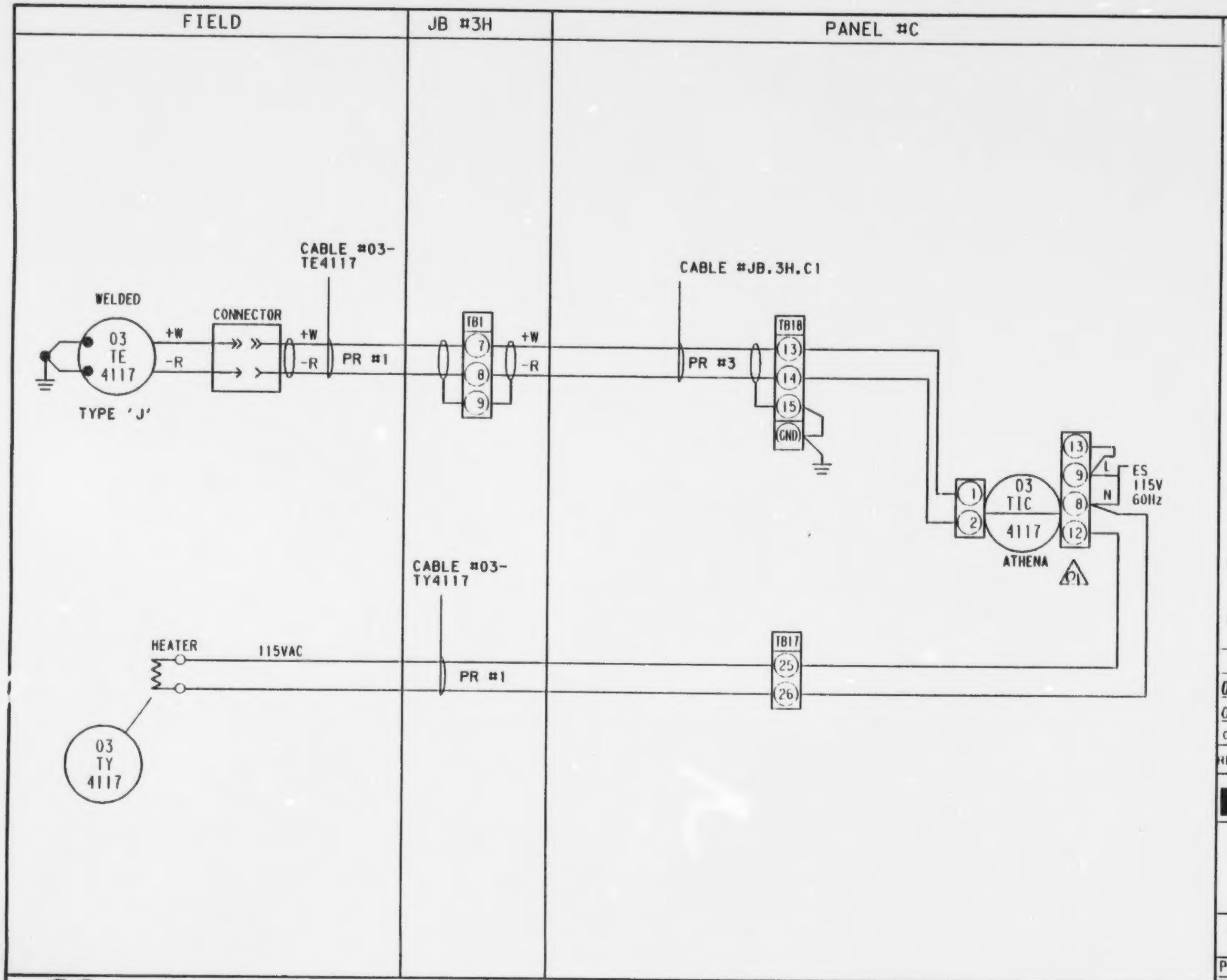

NOTES:

GENERAL NOTES:

A. 24 VAC Power Supply from GFC, Hammond Series Power Supply in panel.

B. 4-20mA signals to computer are shunted by EMR with a resistor to provide voltage signal to computer card.

C. Compatibility of voltage signals to computer programmed by EMR.

REV	DATE	DESCRIPTION	CHK	MEC APP	EMR APP
02	86.09	PH.1 FINAL			
01	86.08.6	TIC TERMINAL #'s REVISED	RAV		
00	JUL 86.14	FOR EMR APPROVAL	RW		✓

Energy, Mines and Resources Canada — Énergie, Mines et Ressources Canada

LOOP DIAGRAM
03-T-4117
AREA 3
REACTOR AND SAMPLING SYSTEM

EMR COPROCESSING PILOT PLANT
PP3

PID No. D-3-3 -MP-2
DRAWN CAD DATE 86.07.13
CHKD REV 02
DESIGN

LOOP18

Monenco Consultants Limited

WORK ORDER No. DSS 8279-3

REG. No. 204202

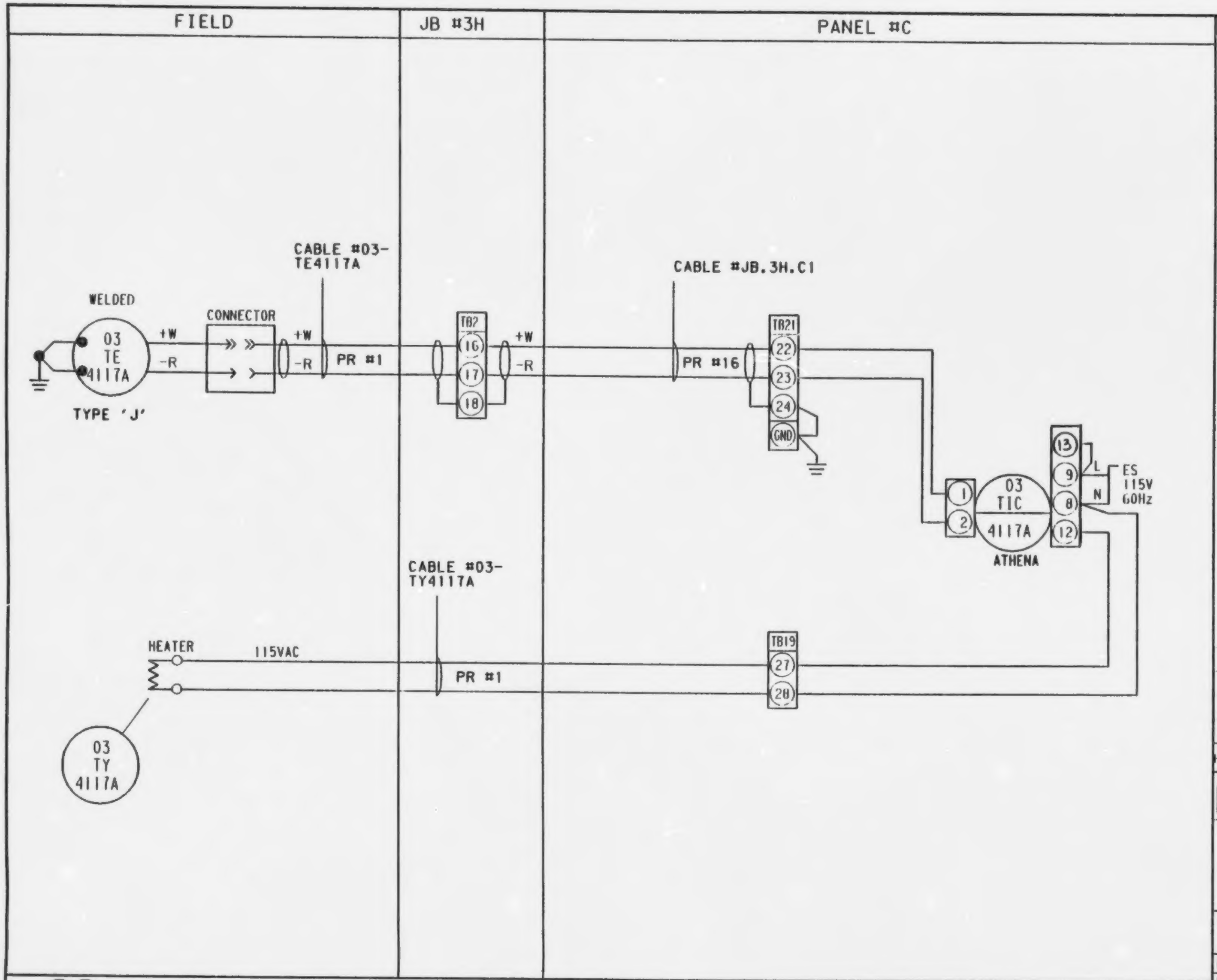

NOTES:

GENERAL NOTES:

A. 24 VAC Power Supply from GFC, Hammond Series Power Supply in panel.

B. 4-20mA signals to computer are shunted by EMR with a resistor to provide voltage signal to computer card.

C. Compatibility of voltage signals to computer programmed by EMR.

REV	DATE	DESCRIPTION	CHK	MEC APP	EMR APP
01	86.09	PH.1 FINAL	CY	WRO	
00	JUL 86.25	FOR EMR APPROVAL	PNJ		✓

Energy, Mines and Resources Canada | Énergie, Mines et Ressources Canada

LOOP DIAGRAM
03-T-4117A

AREA 3
REACTOR AND SAMPLING SYSTEM

EMR COPROCESSING PILOT PLANT
PP3

PID No.	D-3-3 -MP-2		
DRAWN	CAD	DATE	
CHKD			REV
DESIGN			01

LOOP18

Monenco Consultants Limited | WORK ORDER No. DSS 8279-3 | REG. No. 204179

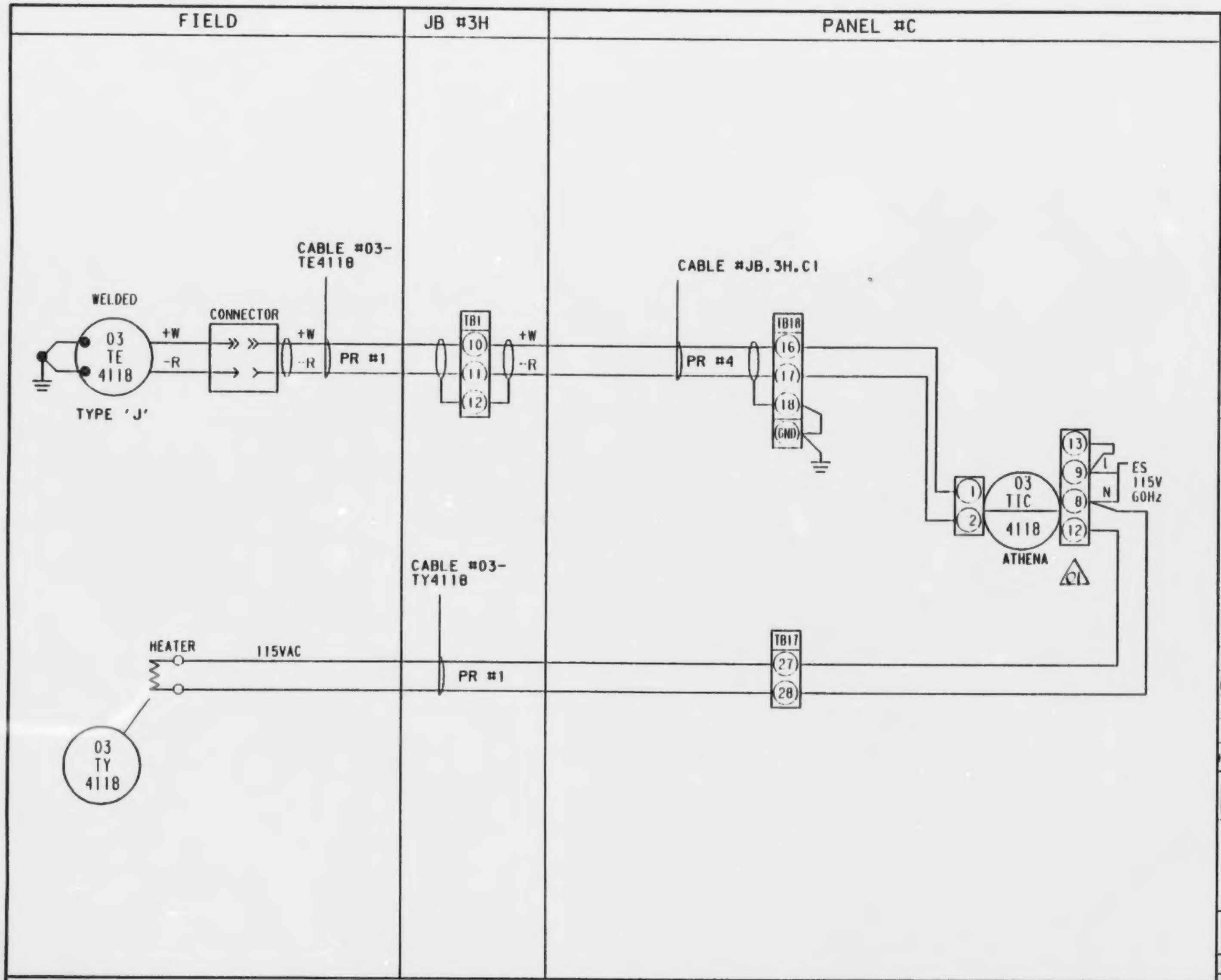

NOTES:

GENERAL NOTES:

A. 24 VAC Power Supply from GFC, Hammond Series Power Supply in panel.

B. 4-20mA signals to computer are shunted by EMR with a resistor to provide voltage signal to computer card.

C. Compatibility of voltage signals to computer programmed by EMR.

REV	DATE	DESCRIPTION	CHK	MEC APP	EMR APP
02	86.09	PH.1 FINAL			
01	86.08.6	TIC TERMINAL #8 REVISED	RPW		
00	JUL 86.14	FOR EMR APPROVAL	RW		✓

Energy, Mines and Resources Canada — Énergie, Mines et Ressources Canada

LOOP DIAGRAM
03-T-4118
AREA 3
REACTOR AND SAMPLING SYSTEM

EMR COPROCESSING PILOT PLANT
PP3

PID No.	D-3-3 -MP-2		
DRAWN	CAD	DATE	86.07.13
CHKD		REV	02
DESIGN			

Monenco Consultants Limited

WORK ORDER No. DSS 8279-3

REG. No. 204203

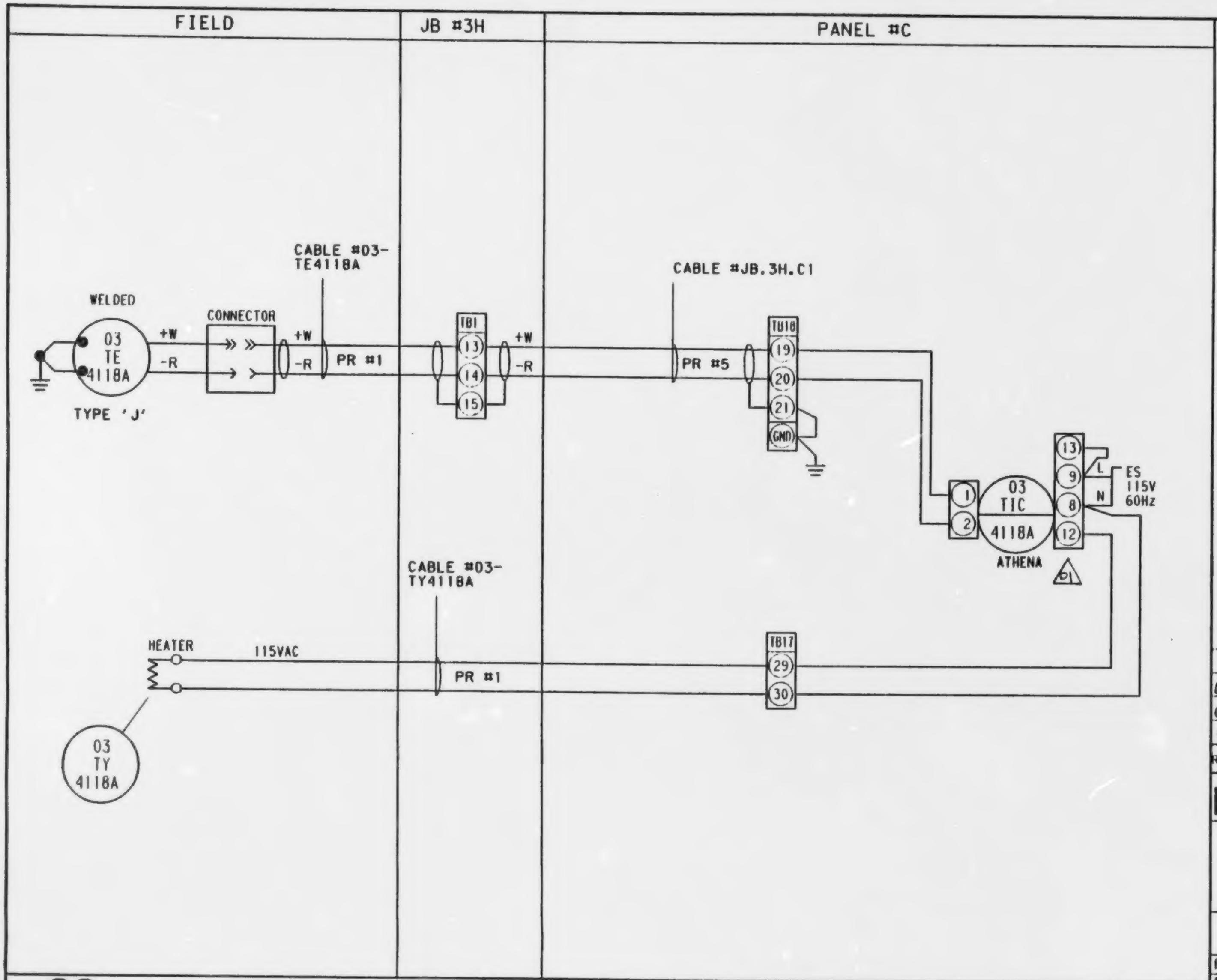

NOTES:

GENERAL NOTES:

A. 24 VAC Power Supply from GFC, Hammond Series Power Supply in panel.

B. 4-20mA signals to computer are shunted by EMR with a resistor to provide voltage signal to computer card.

C. Compatibility of voltage signals to computer programmed by EMR.

REV	DATE	DESCRIPTION	CHK	MEC APP	EMR APP
02	86.09	PH.I FINAL	[illegible]	[illegible]	
01	86.08.6	TIC TERMINAL #'s REVISED	[illegible]		
00	JUL 86.14	FOR EMR APPROVAL	RW		✓

Energy, Mines and Resources Canada / Énergie, Mines et Ressources Canada

LOOP DIAGRAM
03-T-4118A
AREA 3
REACTOR AND SAMPLING SYSTEM

EMR COPROCESSING PILOT PLANT
PP3

PID No.	D-3-3 -MP-2		
DRAWN	CAD	DATE	86.07.13
CHKD			REV
DESIGN			02

Monenco Consultants Limited | WORK ORDER No. DSS 8279-3 | REG. No. 204204

LOOP18

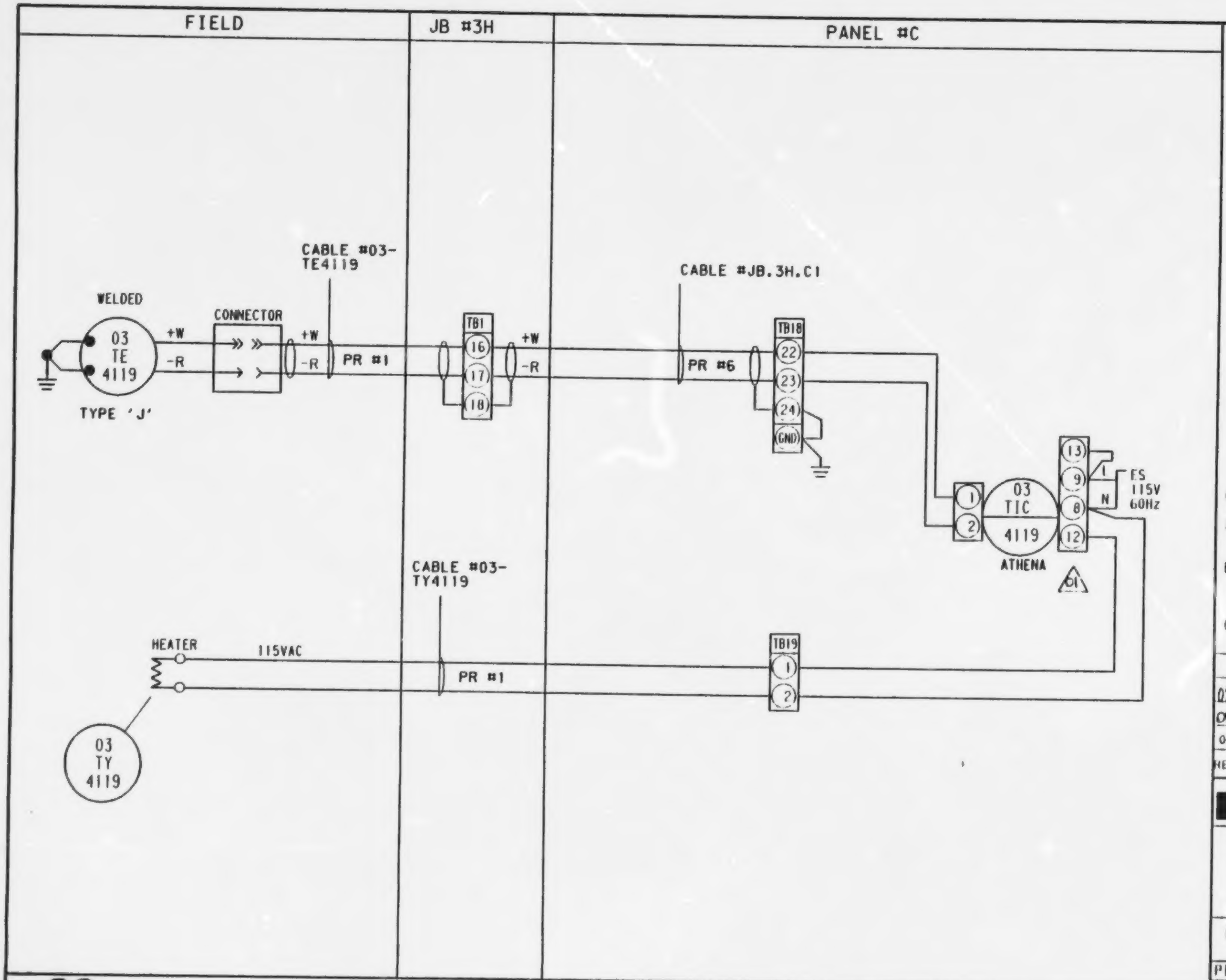

NOTES:

GENERAL NOTES:

A. 24 VAC Power Supply from GFC, Hammond Series Power Supply in panel.

B. 4-20mA signals to computer are shunted by EMR with a resistor to provide voltage signal to computer card.

C. Compatibility of voltage signals to computer programmed by EMR.

REV	DATE	DESCRIPTION	CHK	MEC APP	EMR APP
02	86.09	PH.1 FINAL			
01	86.08.6	TIC TERMINALS REVISED	RAW		
00	JUL 86.14	FOR EMR APPROVAL	RW		/

Energy, Mines and Resources Canada — Énergie, Mines et Ressources Canada

LOOP DIAGRAM
03-T-4119
AREA 3
REACTOR AND SAMPLING SYSTEM

EMR COPROCESSING PILOT PLANT
PP3

PID No.	D-3-3 -MP-2		
DRAWN	CAD	DATE	86.07.13
CHKD			REV
DESIGN			02

Monenco Consultants Limited

WORK ORDER No. DSS 8279-3

REG. No. 204205

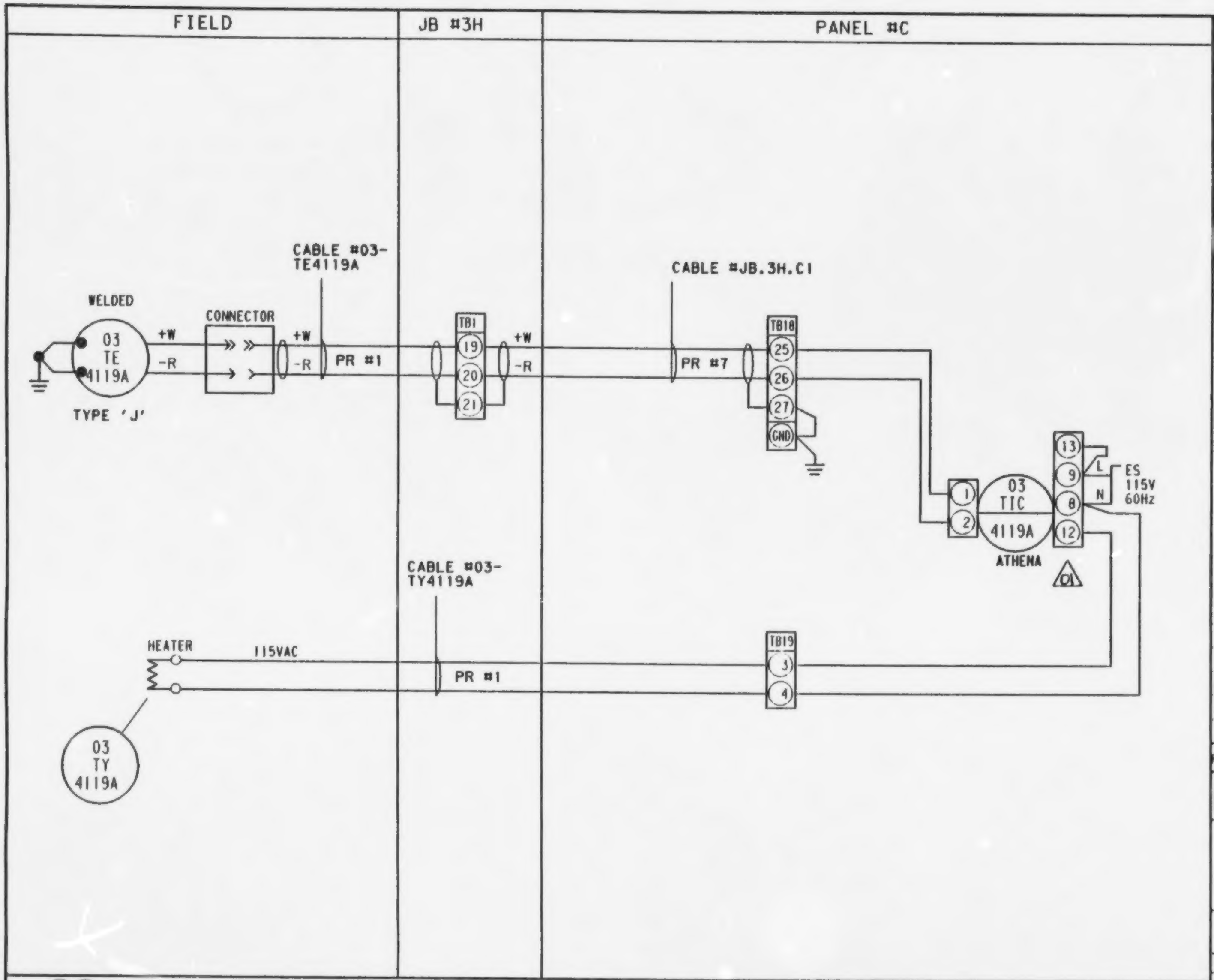

NOTES:

GENERAL NOTES:

A. 24 VAC Power Supply from GFC, Hammond Series Power Supply in panel.

B. 4-20mA signals to computer are shunted by EMR with a resistor to provide voltage signal to computer card.

C. Compatibility of voltage signals to computer programmed by EMR.

REV	DATE	DESCRIPTION	CHK	MEC APP	EMR APP
02	86.09	PH.1 FINAL	CP	MC	
01	86.08.6	TC TERMINAL #'S REVISED	RW		
00	JUL 86.14	FOR EMR APPROVAL	RW		✓

Energy, Mines and Resources Canada — Énergie, Mines et Ressources Canada

LOOP DIAGRAM
03-T-4119A

AREA 3
REACTOR AND SAMPLING SYSTEM

EMR COPROCESSING PILOT PLANT
PP3

PID No.	D-3-3 -MP-2	
DRAWN	CAD	DATE 86.07.13
CHKD		REV
DESIGN		02

Monenco Consultants Limited

WORK ORDER No. DSS 8279-3

REG. No. 204206

LOOP18

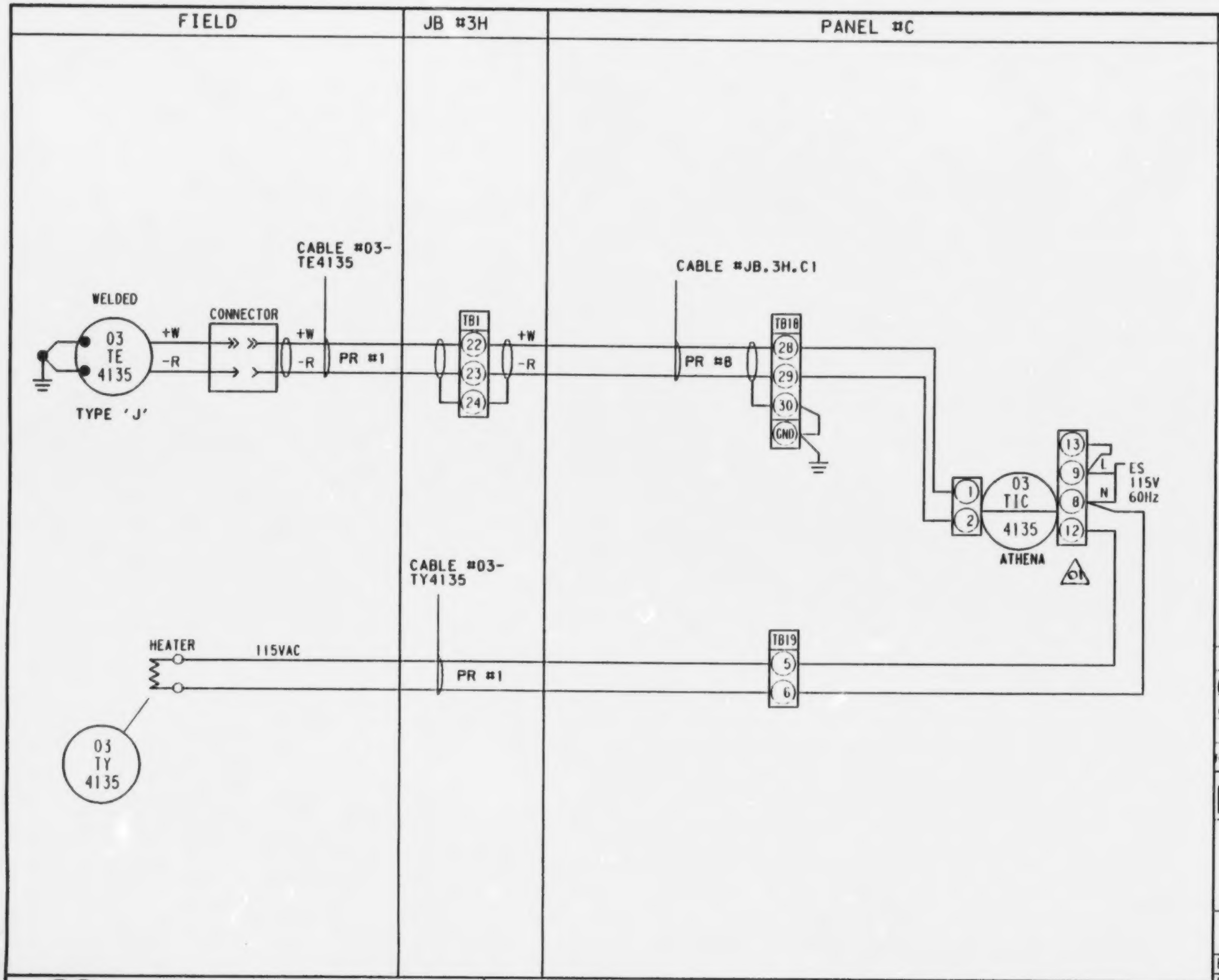

NOTES:

GENERAL NOTES:

A. 24 VAC Power Supply from GFC, Hammond Series Power Supply in panel.

B. 4-20mA signals to computer are shunted by EMR with a resistor to provide voltage signal to computer card.

C. Compatibility of voltage signals to computer programmed by EMR.

REV	DATE	DESCRIPTION	CHK	MEC APP	EMR APP
02	86.09	PH.4 FINAL			
01	86.08.6	TIC TERMINAL #s REVISED			
00	JUL 86.14	FOR EMR APPROVAL	RW		✓

Energy, Mines and Resources Canada — Énergie, Mines et Ressources Canada

LOOP DIAGRAM
03-T-4135

AREA 3
REACTOR AND SAMPLING SYSTEM

EMR COPROCESSING PILOT PLANT
PP3

PID No.	D-3-3 -MP-2		
DRAWN	CAD	DATE	86.07.13
CHKD			REV 02
DESIGN			

Monenco Consultants Limited

WORK ORDER No. DSS 8279-3

REG. No. 204207

LOOP18

B

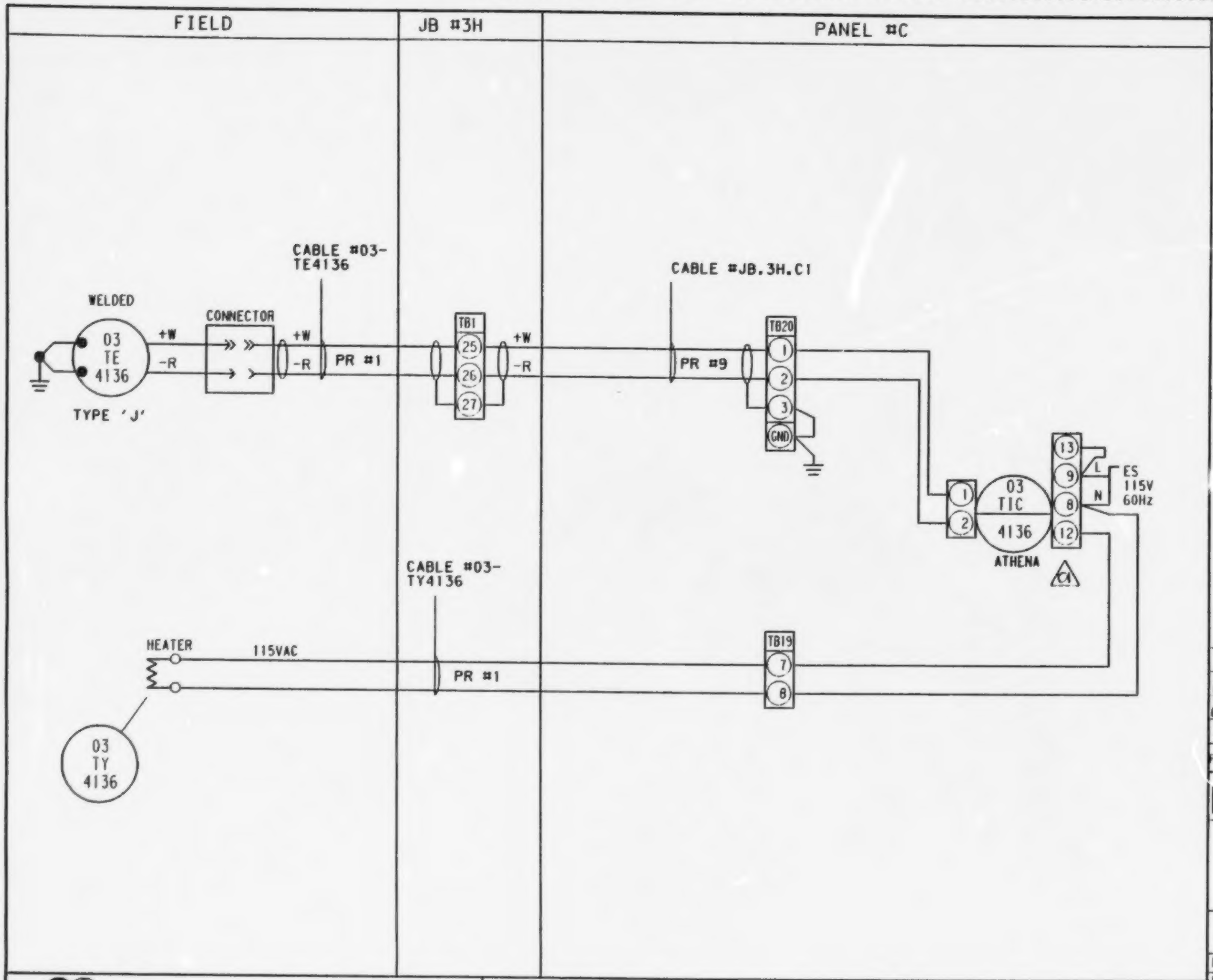

NOTES:

GENERAL NOTES:

A. 24 VAC Power Supply from GFC, Hammond Series Power Supply in panel.

B. 4-20mA signals to computer are shunted by EMR with a resistor to provide voltage signal to computer card.

C. Compatibility of voltage signals to computer programmed by EMR.

REV	DATE	DESCRIPTION	CHK	MEC APP	EMR APP
02	86.09	PH.1 FINAL			
01	86.08.6	TIC TERMINAL #'s REVISED	RPW		
00	JUL 86.14	FOR EMR APPROVAL	RW		✓

Energy, Mines and Resources Canada / Énergie, Mines et Ressources Canada

LOOP DIAGRAM
03-T-4136
AREA 3
REACTOR AND SAMPLING SYSTEM

EMR COPROCESSING PILOT PLANT
PP3

PID No.	D-3-3 -MP-2		
DRAWN	CAD	DATE	86.07.13
CHKD		REV	02
DESIGN			

Monenco Consultants Limited

WORK ORDER No. DSS 8279-3

REG. No. 204208

LOOP18

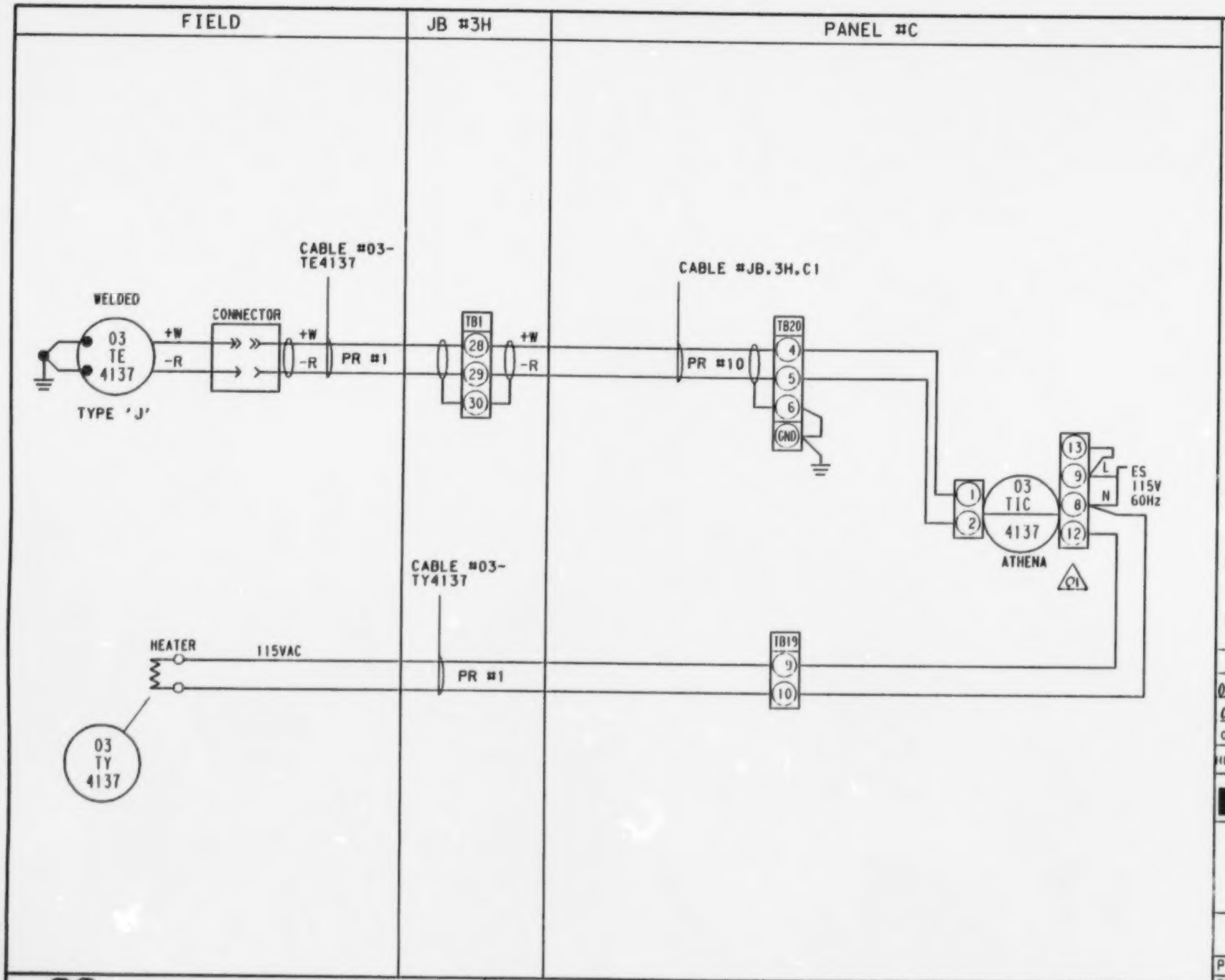

NOTES:

GENERAL NOTES:

A. 24 VAC Power Supply from GFC, Hammond Series Power Supply in panel.

B. 4-20mA signals to computer are shunted by EMR with a resistor to provide voltage signal to computer card.

C. Compatibility of voltage signals to computer programmed by EMR.

REV	DATE	DESCRIPTION	CHK	MEC APP	EMR APP
02	86.09	PH.I FINAL	C-P	AP	
01	86.08.6	TIC TERMINAL #1 REVISED	PRJ		
00	JUL 86.14	FOR EMR APPROVAL	RW		✓

Energy, Mines and Resources Canada / Énergie, Mines et Ressources Canada

LOOP DIAGRAM
03-T-4137
AREA 3
REACTOR AND SAMPLING SYSTEM

EMR COPROCESSING PILOT PLANT
PP3

PID No. D-3-3 -MP-2
DRAWN CAD | DATE 86.07.13
CHKD
DESIGN
REV 02

Monenco Consultants Limited | WORK ORDER No. DSS 8279-3 | REG. No. 204209

LOOP18

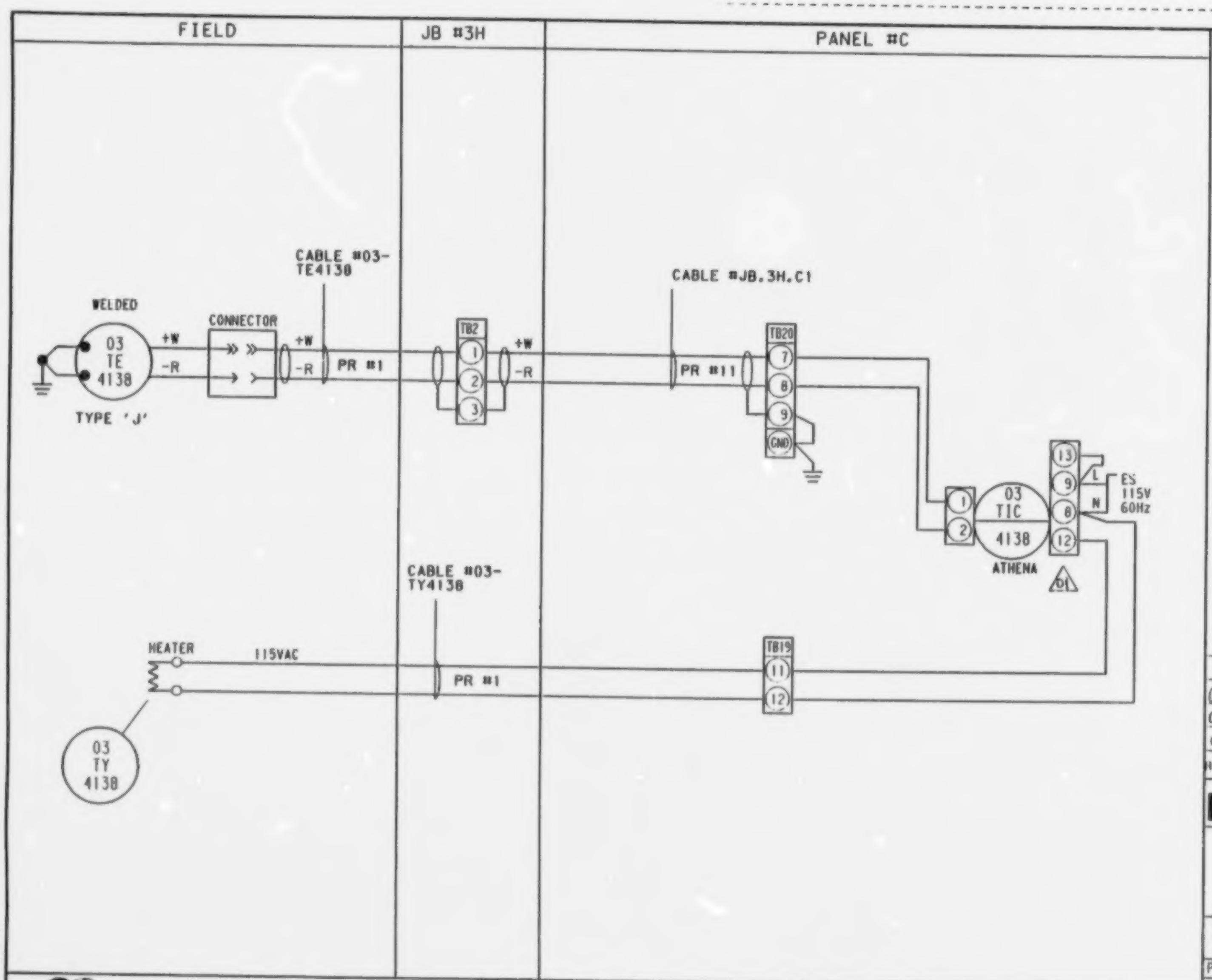

NOTES:

GENERAL NOTES:

A. 24 VAC Power Supply from GFC, Hammond Series Power Supply in panel.

B. 4-20mA signals to computer are shunted by EMR with a resistor to provide voltage signal to computer card.

C. Compatibility of voltage signals to computer programmed by EMR.

REV	DATE	DESCRIPTION	CHK	MEC APP	EMR APP
02	86.09	PH.4 FINAL	LP	[illegible]	
01	86.08.6	TIC TERMINAL #'s REVISED	RW		
00	JUL 86.14	FOR EMR APPROVAL	RW		✓

Energy, Mines and Resources Canada — Énergie, Mines et Ressources Canada

LOOP DIAGRAM
03-T-4138
AREA 3
REACTOR AND SAMPLING SYSTEM

EMR COPROCESSING PILOT PLANT
PP3

PID No.	D-3-3 -MP-2
DRAWN CAD	DATE 86.07.11
CHKD	REV 02
DESIGN	

Monenco Consultants Limited | WORK ORDER No. DSS 8279-3 | REG. No. 204210

LOOP18

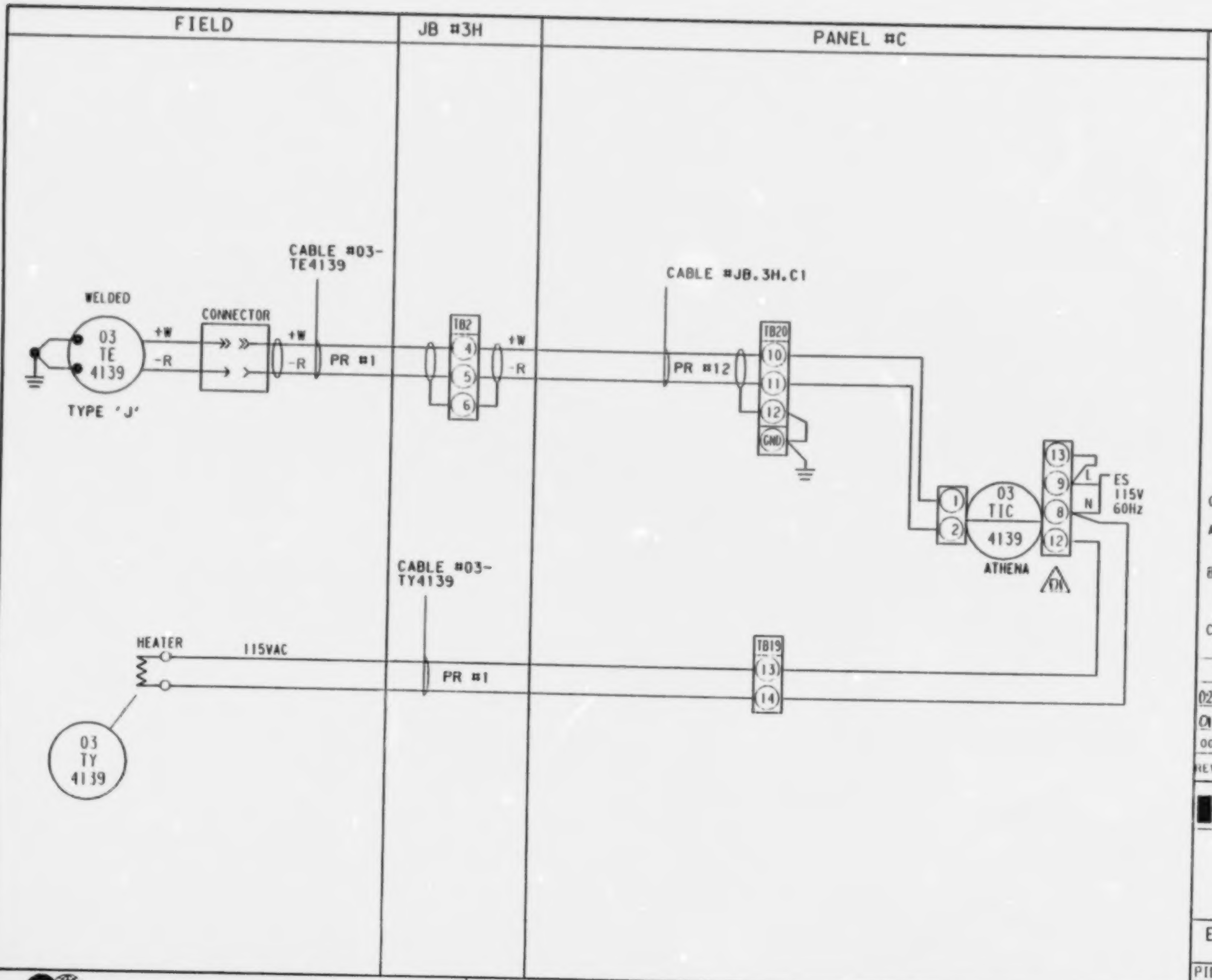

NOTES:

GENERAL NOTES:

A. 24 VAC Power Supply from GFC, Hammond Series Power Supply in panel.

B. 4-20mA signals to computer are shunted by EMR with a resistor to provide voltage signal to computer card.

C. Compatibility of voltage signals to computer programmed by EMR.

REV	DATE	DESCRIPTION	CHK	MEC APP	EMR APP
02	86.09	PH.I FINAL			
01	86.08.6	TC TERMINAL #S REVISED			
00	JUL 86.14	FOR EMR APPROVAL	RW		✓

Energy, Mines and Resources Canada — Énergie, Mines et Ressources Canada

LOOP DIAGRAM
03-T-4139
AREA 3
REACTOR AND SAMPLING SYSTEM

EMR COPROCESSING PILOT PLANT
PP3

PID No.	D-3-3 -MP-2	
DRAWN	CAD DATE 86.07.13	
CHKD		REV 02
DESIGN		

Monenco Consultants Limited | WORK ORDER No. DSS 8279-3 | REG. No. 204211

LOOP18

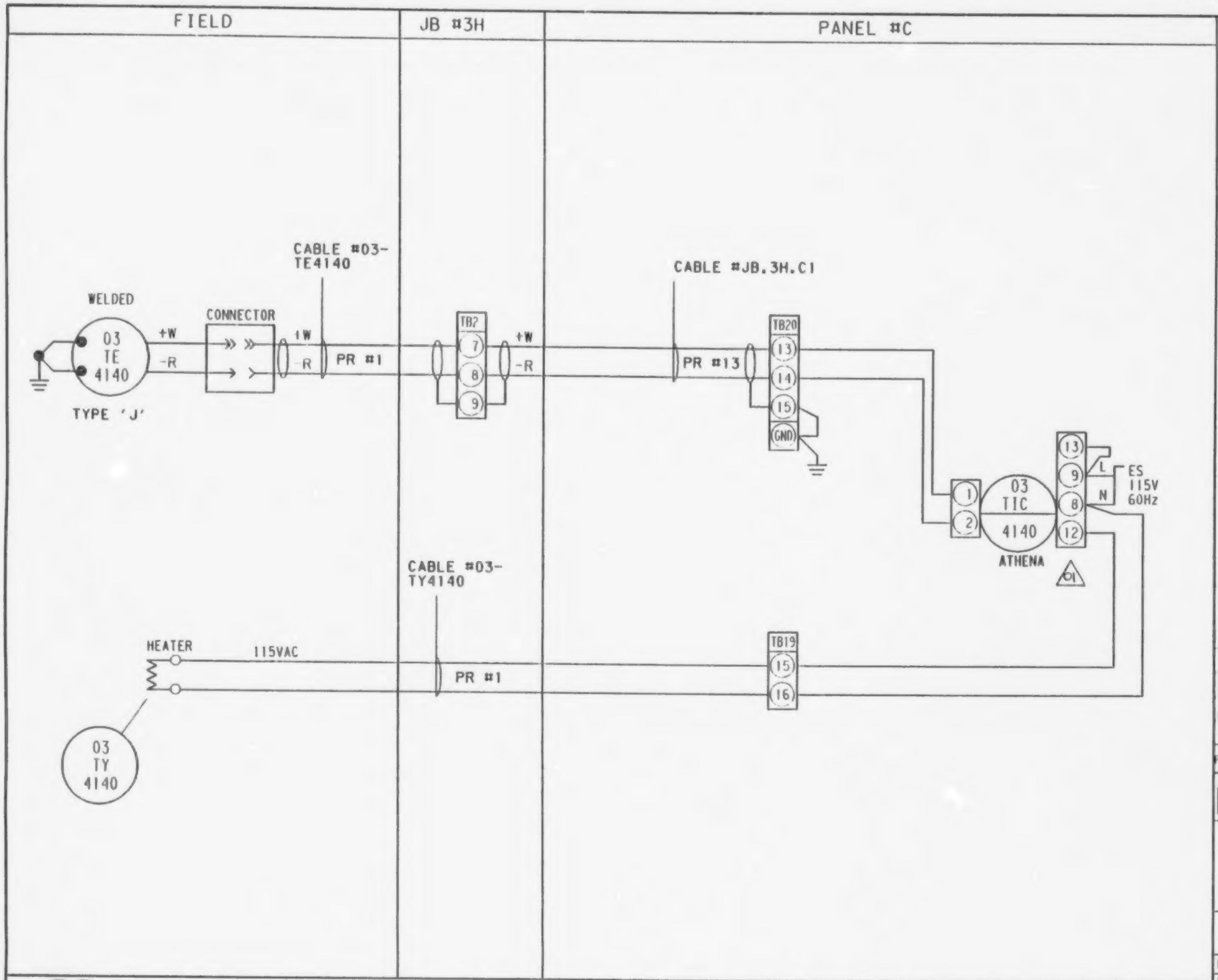

NOTES:

GENERAL NOTES:

A. 24 VAC Power Supply from GFC, Hammond Series Power Supply in panel.

B. 4-20mA signals to computer are shunted by EMR with a resistor to provide voltage signal to computer card.

C. Compatibility of voltage signals to computer programmed by EMR.

REV	DATE	DESCRIPTION	CHK	MEC APP	EMR APP
02	86.09	PH.1 FINAL			
01	86.08.6	IIC [illegible] #1 REVISED	RAJ		
00	JUL 86.14	FOR EMR APPROVAL	RW		✓

Energy, Mines and Resources Canada / Énergie, Mines et Ressources Canada

LOOP DIAGRAM
03-T-4140
AREA 3
REACTOR AND SAMPLING SYSTEM

EMR COPROCESSING PILOT PLANT
PP3

PID No. D-3-3 -MP-2
DRAWN CAD DATE 86.07.13
CHKD
DESIGN REV 02

Monenco Consultants Limited

WORK ORDER No. DSS 8279-3

REG. No. 204212

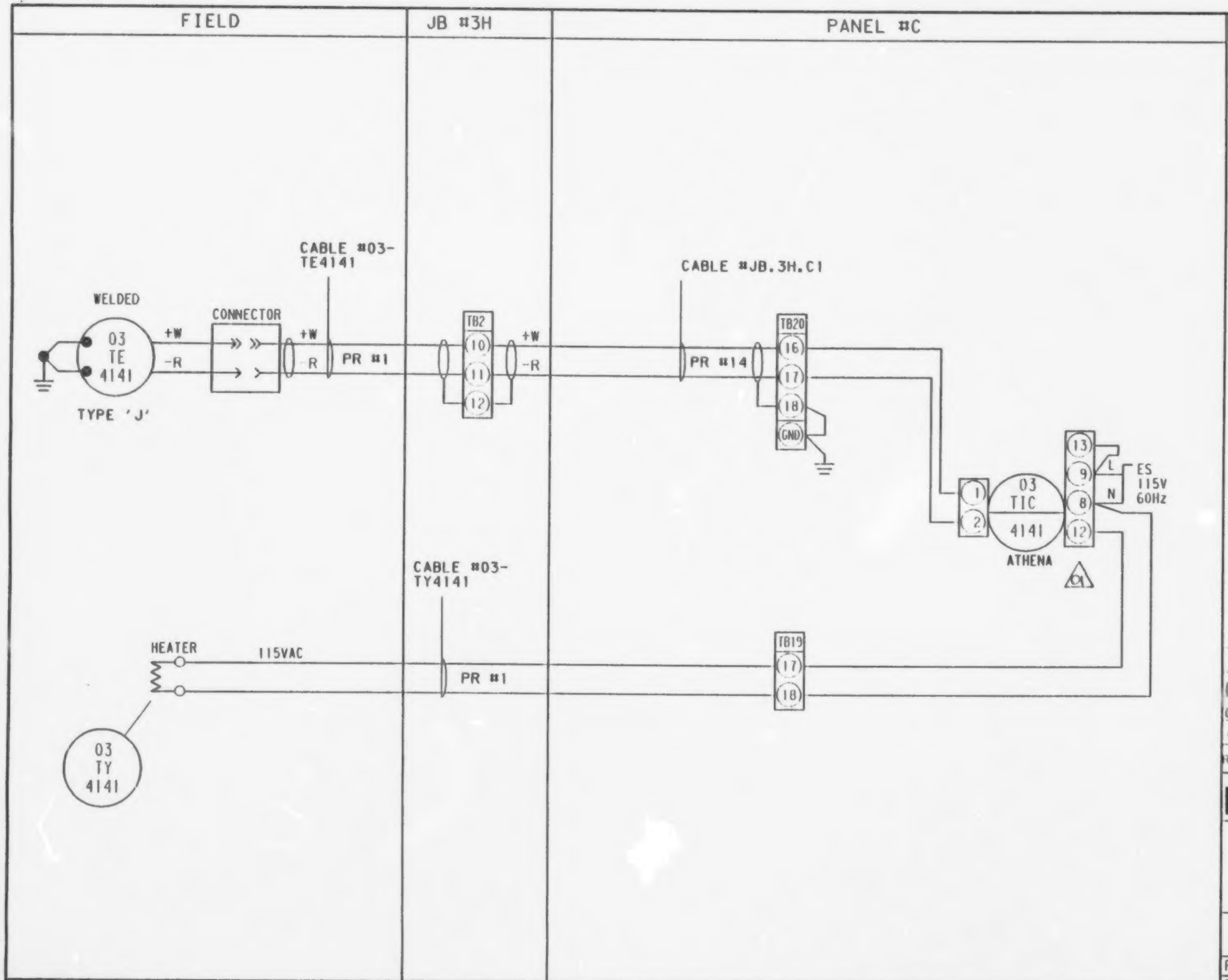

NOTES:

GENERAL NOTES:

A. 24 VAC Power Supply from GFC, Hammond Series Power Supply in panel.

B. 4-20mA signals to computer are shunted by EMR with a resistor to provide voltage signal to computer card.

C. Compatibility of voltage signals to computer programmed by EMR.

REV	DATE	DESCRIPTION	CHK	MEC APP	EMR APP
02	86.09	PH.1 FINAL			
01	86.08.6	[illegible] #1 REVISED	RW		
00	JUL 86.14	FOR EMR APPROVAL	RW		✓

Energy, Mines and Resources Canada — Energie, Mines et Ressources Canada

LOOP DIAGRAM
03-T-4141
AREA 3
REACTOR AND SAMPLING SYSTEM

EMR COPROCESSING PILOT PLANT
PP3

PID No.	D-3-3 -MP-2		
DRAWN	CAD	DATE	86.07.13
CHKD		REV	02
DESIGN			

Monenco Consultants Limited | WORK ORDER No. DSS 8279-3 | REG. No. 204213

LOOP18

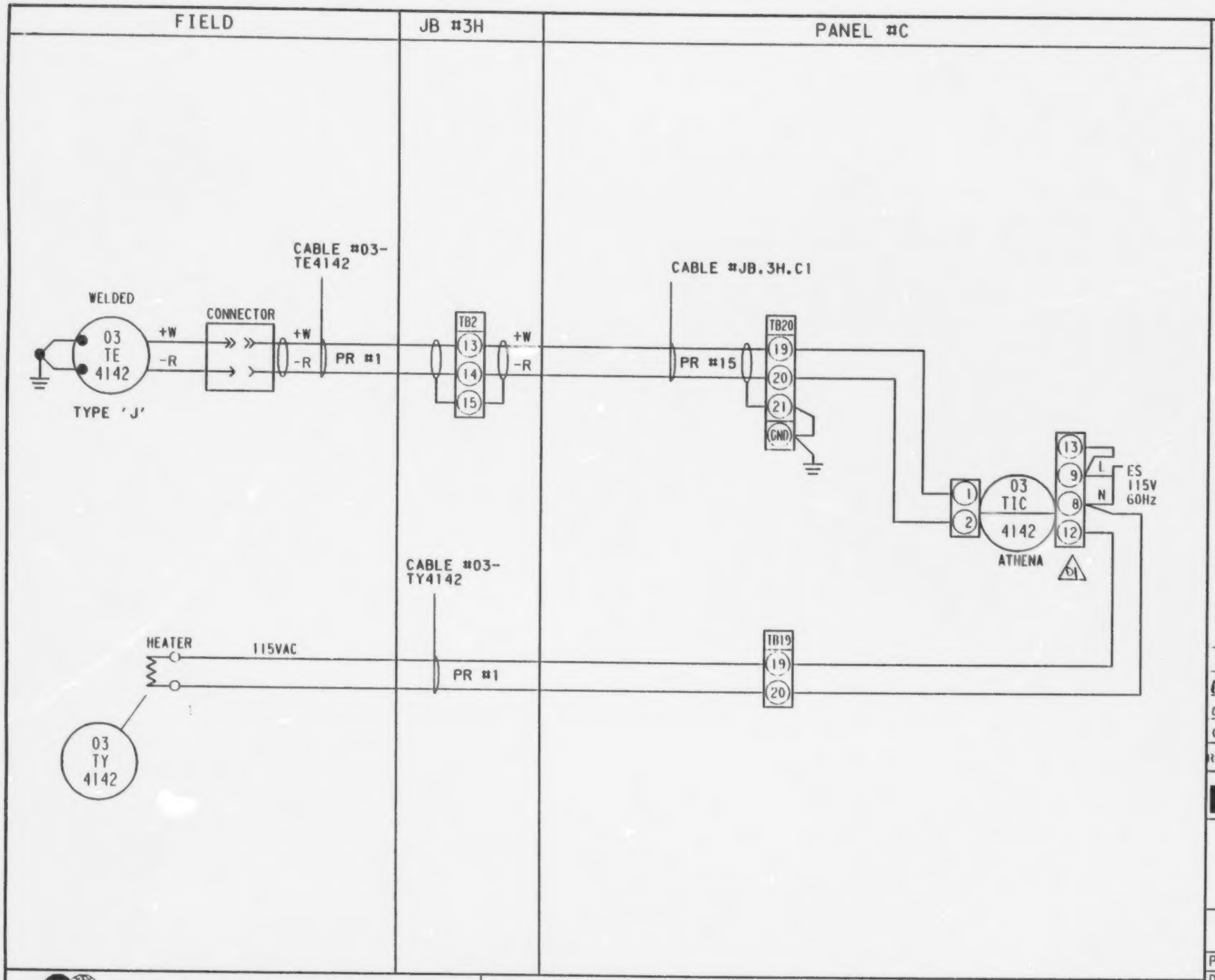

NOTES:

GENERAL NOTES:

A. 24 VAC Power Supply from GFC, Hammond Series Power Supply in panel.

B. 4-20mA signals to computer are shunted by EMR with a resistor to provide voltage signal to computer card.

C. Compatibility of voltage signals to computer programmed by EMR.

REV	DATE	DESCRIPTION	CHK	MEC APP	EMR APP
02	86.09	PH.1 FINAL	CP	[illegible]	
01	86.08.6	TIC TERMINAL #'s REVISED	RW		
00	JUL 86.14	FOR EMR APPROVAL	RW		✓

Energy, Mines and Resources Canada / Énergie, Mines et Ressources Canada

LOOP DIAGRAM
03-T-4142
AREA 3
REACTOR AND SAMPLING SYSTEM

EMR COPROCESSING PILOT PLANT
PP3

PID No. D-3-3 -MP-2
DRAWN CAD DATE 86.07.13
CHKD
DESIGN REV 02

Monenco Consultants Limited | WORK ORDER No. DSS 8279-3 | REG. No. 204214

B

LOOP-1B

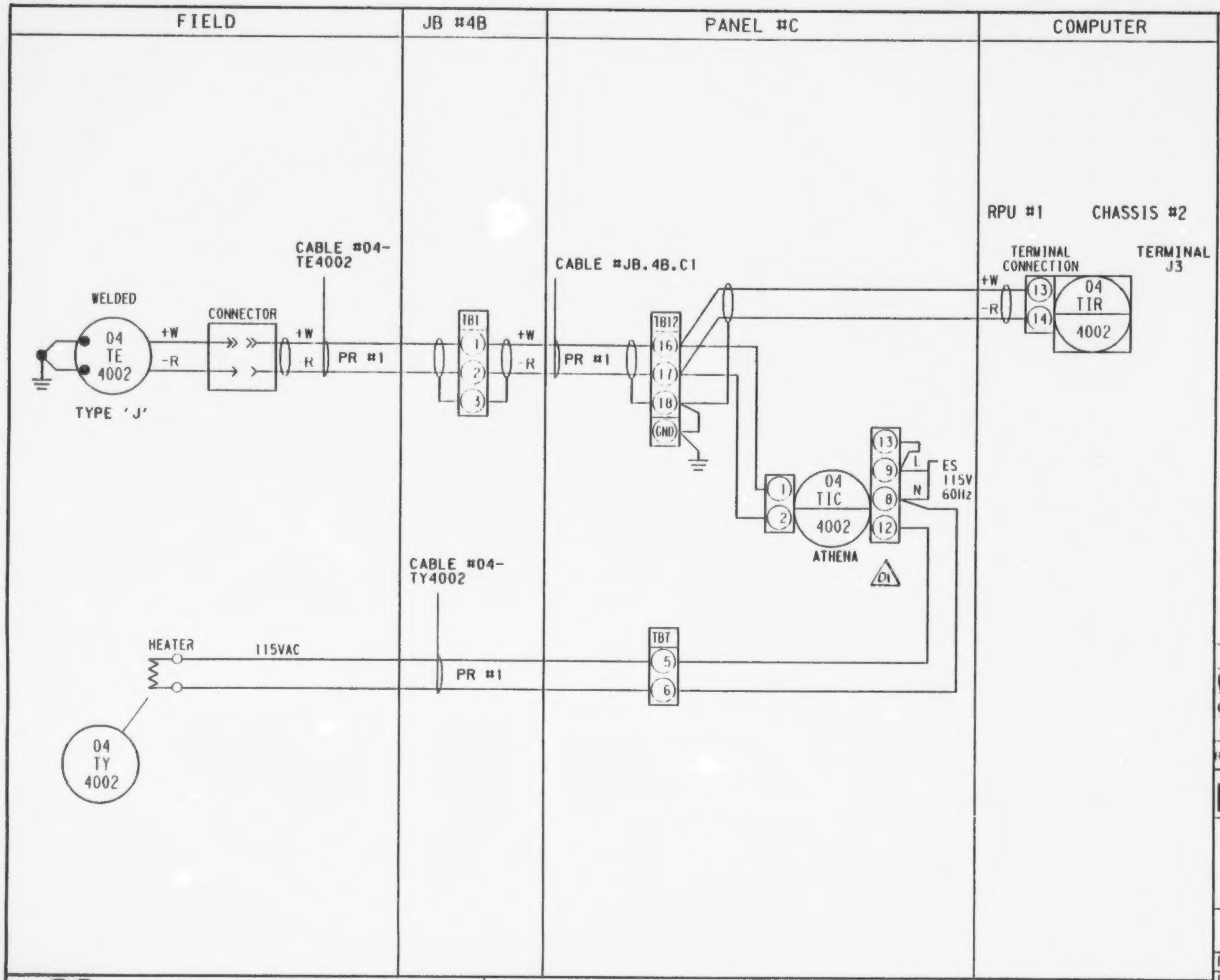

NOTES:

GENERAL NOTES:

A. 24 VAC Power Supply from GFC, Hammond Series Power Supply in panel.

B. 4-20mA signals to computer are shunted by EMR with a resistor to provide voltage signal to computer card.

C. Compatibility of voltage signals to computer programmed by EMR.

REV	DATE	DESCRIPTION	CHK	MEC APP	EMR APP
02	86.09	91.4 FINAL			
01	86.08.4	TIC TERMINAL #'S REVISED	RW		
00	JUL 86.14	FOR EMR APPROVAL	RW		✓

Energy, Mines and Resources Canada — Énergie, Mines et Ressources Canada

LOOP DIAGRAM
04-T-4002
AREA 4
HEAVY OIL SYSTEM

EMR COPROCESSING PILOT PLANT PP3

PID No.	D-3-4 -MP-1
DRAWN	CAD
DATE	86.07.13
CHKD	
DESIGN	
REV	02

Monenco Consultants Limited

WORK ORDER No. DSS 8279-3

REG. No. 203991

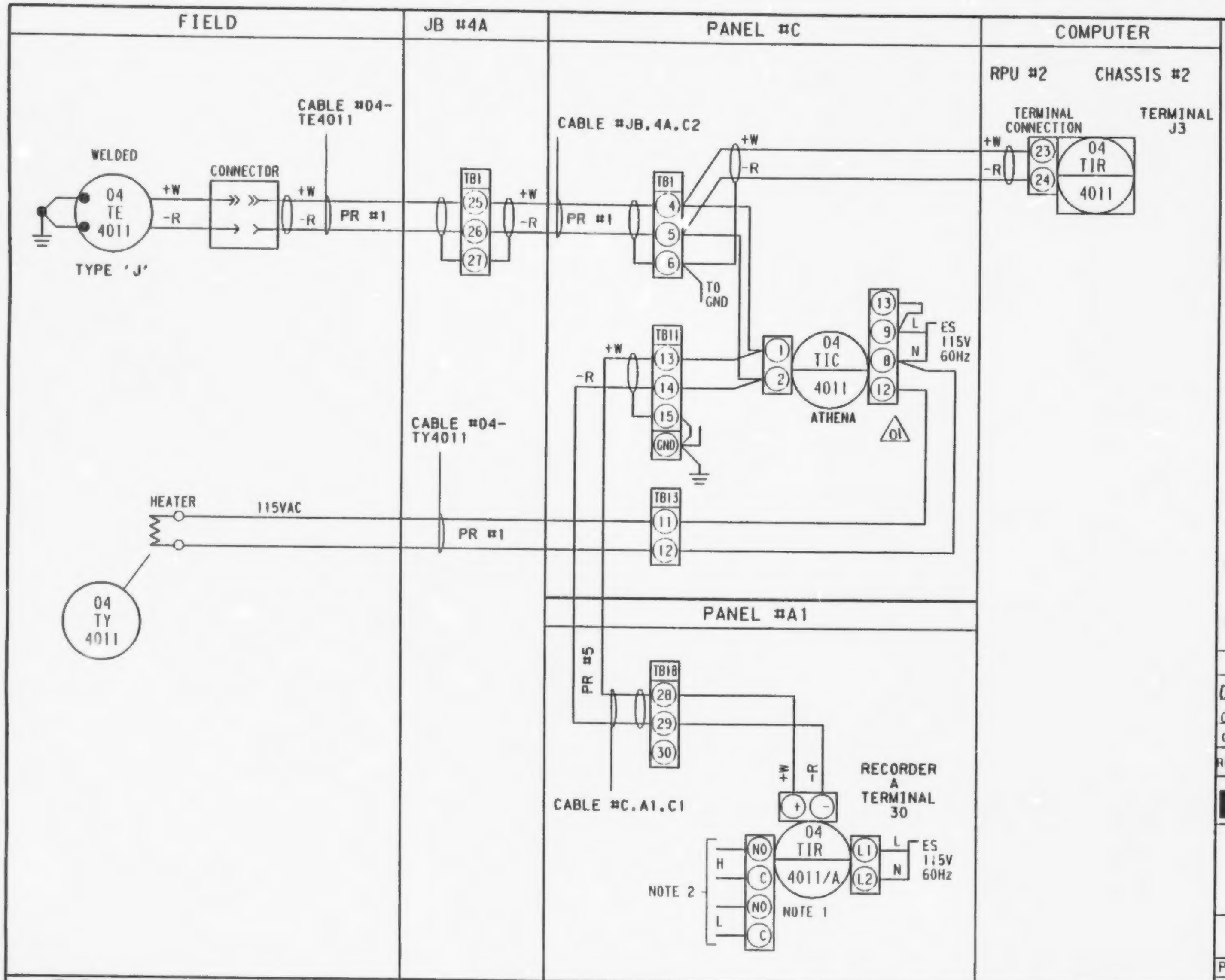

NOTES:
1. POINT-ON "YEW" MULTIPOINT RECORDER.
2. ALARM-WIRED TO COMMON PANEL ALARM. ONE SET OF ALARM CONTACTS PER RECORDER ARE COMMON TO ALL POINTS.

GENERAL NOTES:

A. 24 VAC Power Supply from GFC, Hammond Series Power Supply in panel.

B. 4-20mA signals to computer are shunted by EMR with a resistor to provide voltage signal to computer card.

C. Compatibility of voltage signals to computer programmed by EMR.

REV	DATE	DESCRIPTION	CHK	MEC APP	EMR APP
02	86.09	PH.1 FINAL	cP	[illegible]	
01	86.08.4	TIC TERMINAL #'s REVISED	RAJ		
00	JUL 86.14	FOR EMR APPROVAL	RW		✓

Energy, Mines and Resources Canada — Énergie, Mines et Ressources Canada

LOOP DIAGRAM
04-T-4011
AREA 4
HEAVY OIL SYSTEM

EMR COPROCESSING PILOT PLANT PP3

PID No.	D-3-4 -MP-1		
DRAWN	CAD	DATE	86.07.13
CHKD			REV
DESIGN			02

Monenco Consultants Limited

WORK ORDER No. DSS 8279-3

REG. No. 203951

LOOP9

B

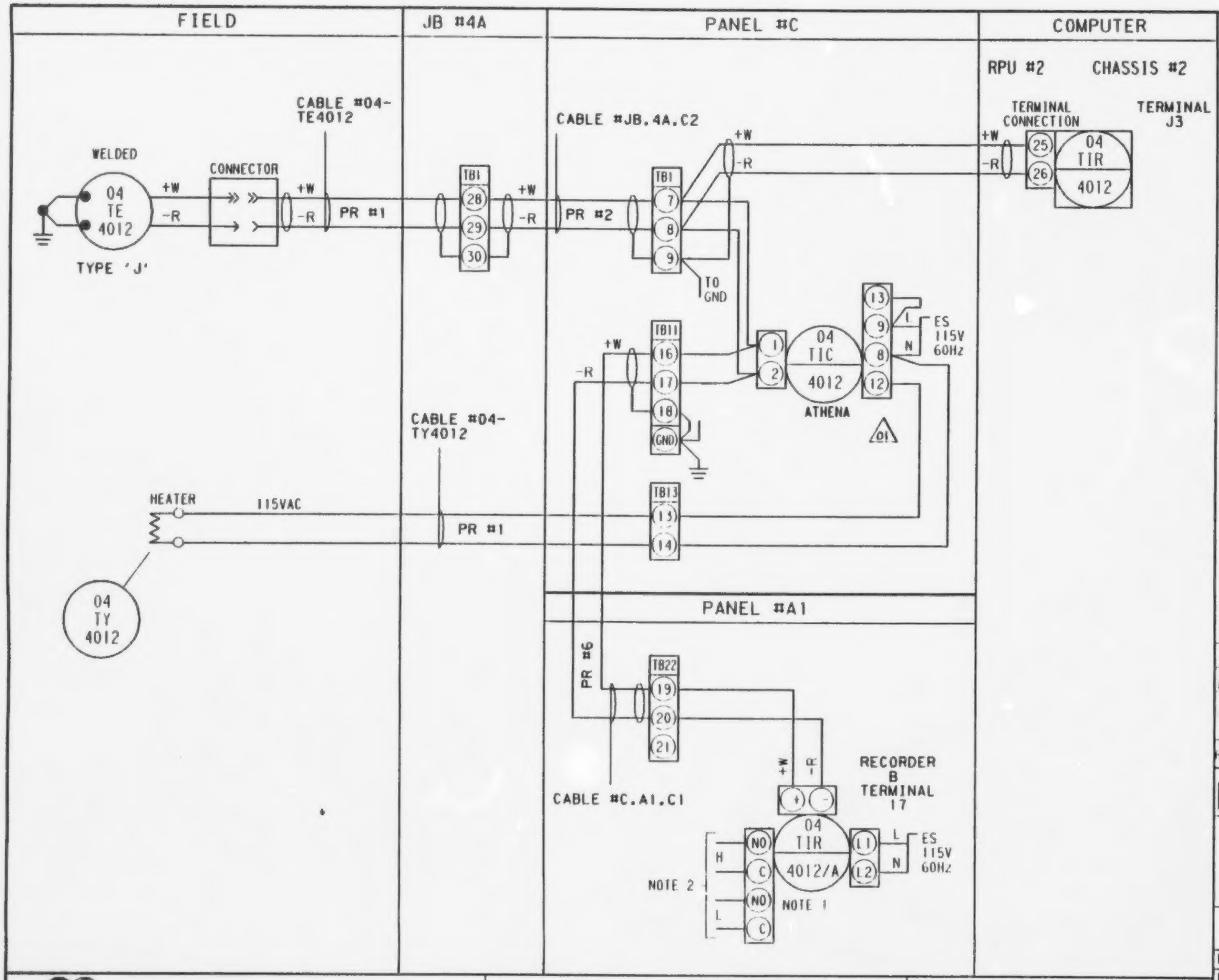

NOTES:
1. POINT ON "YEW" MULTIPOINT RECORDER.
2. ALARM-WIRED TO COMMON PANEL ALARM. ONE SET OF ALARM CONTACTS PER RECORDER ARE COMMON TO ALL POINTS.

GENERAL NOTES:

A. 24 VAC Power Supply from GFC, Hammond Series Power Supply in panel.

B. 4-20mA signals to computer are shunted by EMR with a resistor to provide voltage signal to computer card.

C. Compatibility of voltage signals to computer programmed by EMR.

REV	DATE	DESCRIPTION	CHK	MEC APP	EMR APP
02	86.09	PH.1 FINAL			
01	86.08.4	TIC TERMINAL #'s REVISED			
00	JUL 86.14	FOR EMR APPROVAL	RW		✓

Energy, Mines and Resources Canada / Énergie, Mines et Ressources Canada

LOOP DIAGRAM
04-T-4012
AREA 4
HEAVY OIL SYSTEM

EMR COPROCESSING PILOT PLANT
PP3

PID No.	D-3-4 -MP-1		
DRAWN	CAD	DATE	86.07.13
CHKD			REV
DESIGN			02

Monenco Consultants Limited

WORK ORDER No. DSS 8279-3

REG. No. 203952

LOOP9

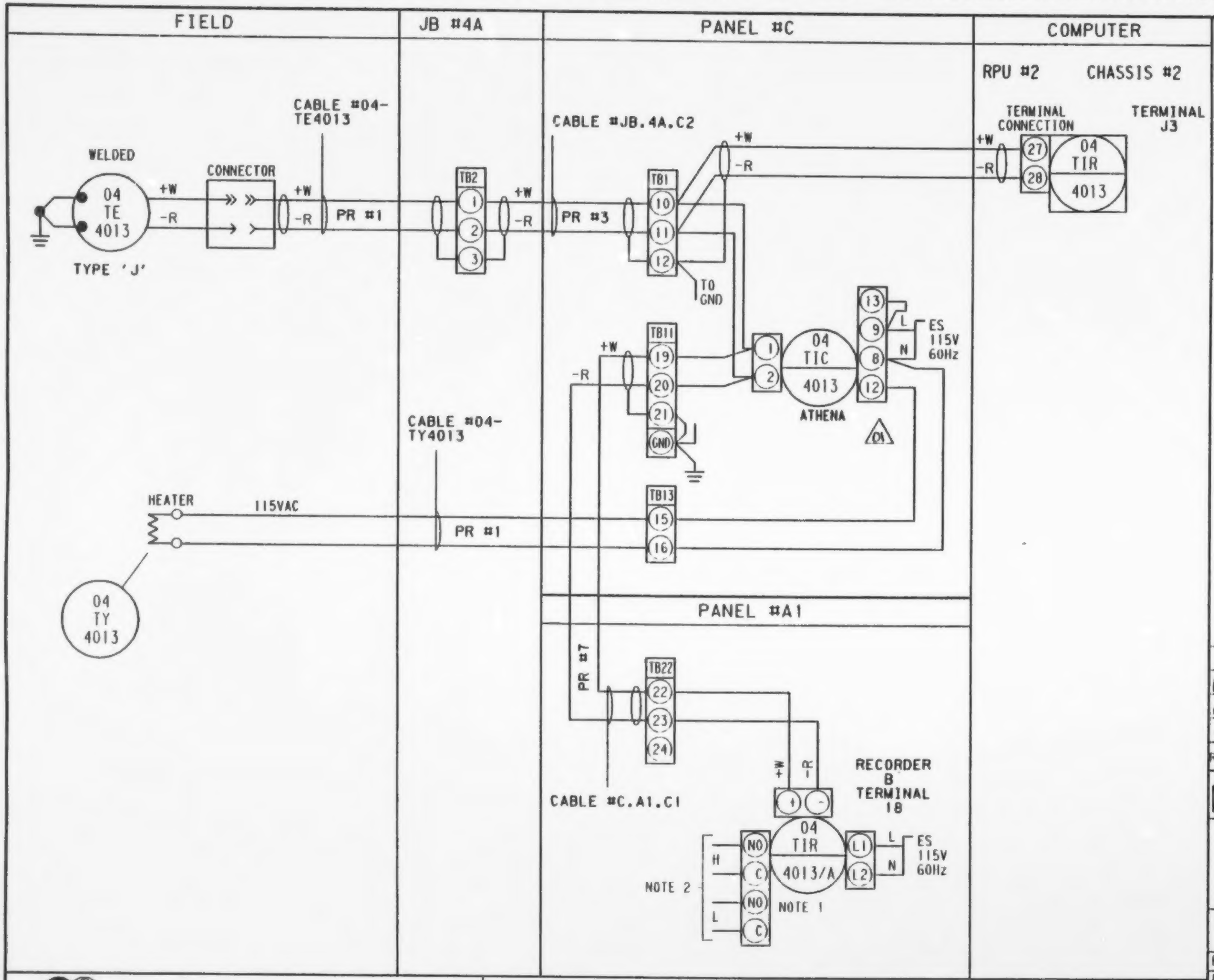

NOTES:
1. POINT-ON "YEW" MULTIPOINT RECORDER.
2. ALARM-WIRED TO COMMON PANEL ALARM. ONE SET OF ALARM CONTACTS PER RECORDER ARE COMMON TO ALL POINTS.

GENERAL NOTES:

A. 24 VAC Power Supply from GFC, Hammond Series Power Supply in panel.

B. 4-20mA signals to computer are shunted by EMR with a resistor to provide voltage signal to computer card.

C. Compatibility of voltage signals to computer programmed by EMR.

REV	DATE	DESCRIPTION	CHK	MEC APP	EMR APP
02	86.09	P&I FINAL	CP	[illegible]	
01	86.08.4	TIC TERMINAL #'s REVISED	[illegible]		
00	JUL 86.14	FOR EMR APPROVAL	RW		✓

Energy, Mines and Resources Canada — Énergie, Mines et Ressources Canada

LOOP DIAGRAM
04-T-4013
AREA 4
HEAVY OIL SYSTEM

EMR COPROCESSING PILOT PLANT PP3

PID No.	D-3-4 -MP-1		
DRAWN	CAD	DATE	86.07.13
CHKD		REV	02
DESIGN			

Monenco Consultants Limited — WORK ORDER No. DSS 8279-3 — REG. No. 203953

B

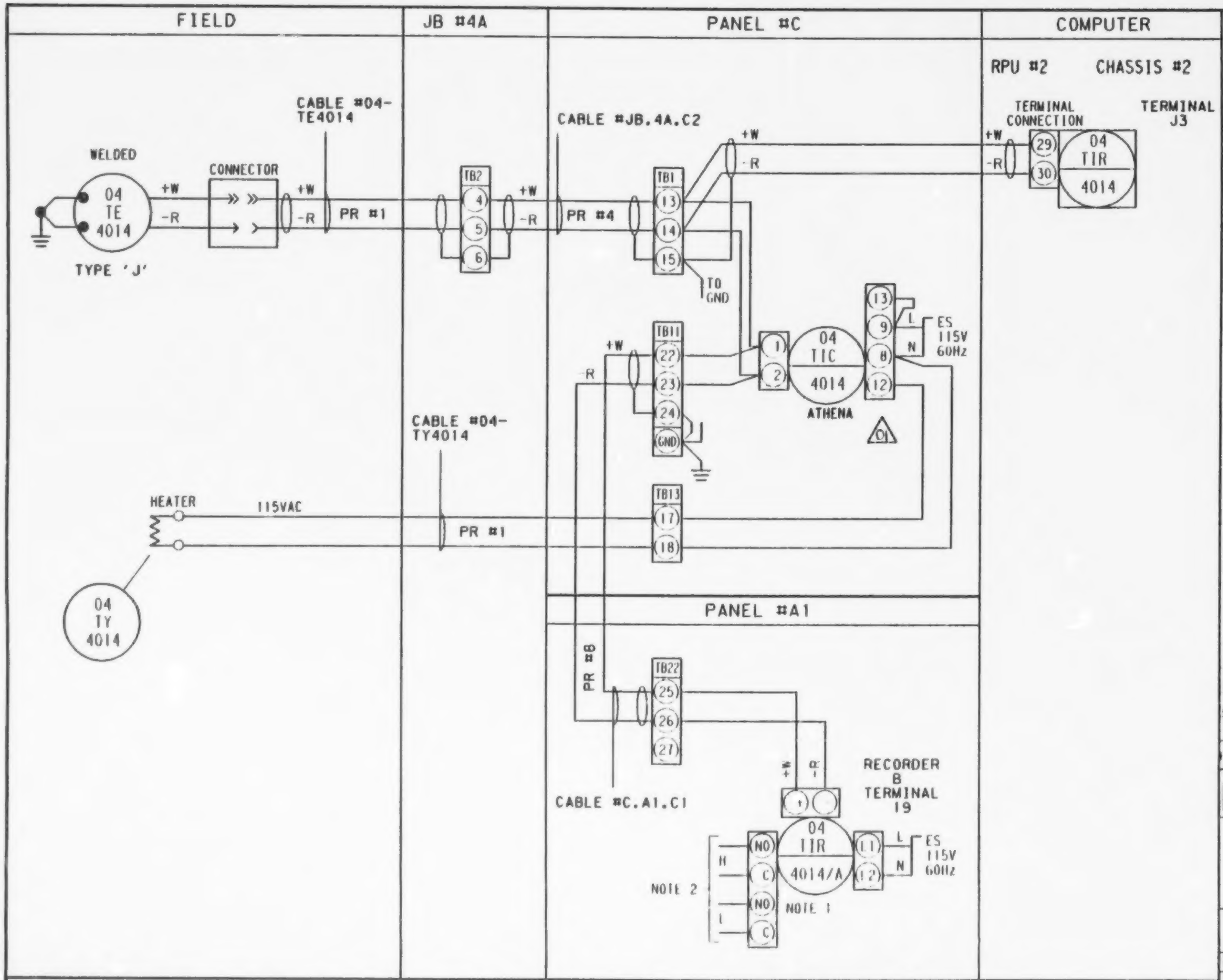

NOTES:

1. POINT-ON "YEW" MULTIPOINT RECORDER.
2. ALARM-WIRED TO COMMON PANEL ALARM. ONE SET OF ALARM CONTACTS PER RECORDER ARE COMMON TO ALL POINTS.

GENERAL NOTES:

A. 24 VAC Power Supply from GFC, Hammond Series Power Supply in panel.

B. 4-20mA signals to computer are shunted by EMR with a resistor to provide voltage signal to computer card.

C. Compatibility of voltage signals to computer programmed by EMR.

REV	DATE	DESCRIPTION	CHK	MEC APP	EMR APP
02	86.09	PH.1 FINAL			
01	86.08.4	TIC TERMINAL #'S REVISED	RPw		
00	86.14	FOR EMR APPROVAL	RW		✓

Energy, Mines and Resources Canada — Énergie, Mines et Ressources Canada

LOOP DIAGRAM
04-T-4014

AREA 4

HEAVY OIL SYSTEM

EMR COPROCESSING PILOT PLANT PP3

PID No.	D-3-4 -MP-1		
DRAWN	CAD	DATE	86.07.13
CHKD			REV 02
DESIGN			

Monenco Consultants Limited

WORK ORDER No. DSS 8279-3

REG. No. 203954

LOOP9

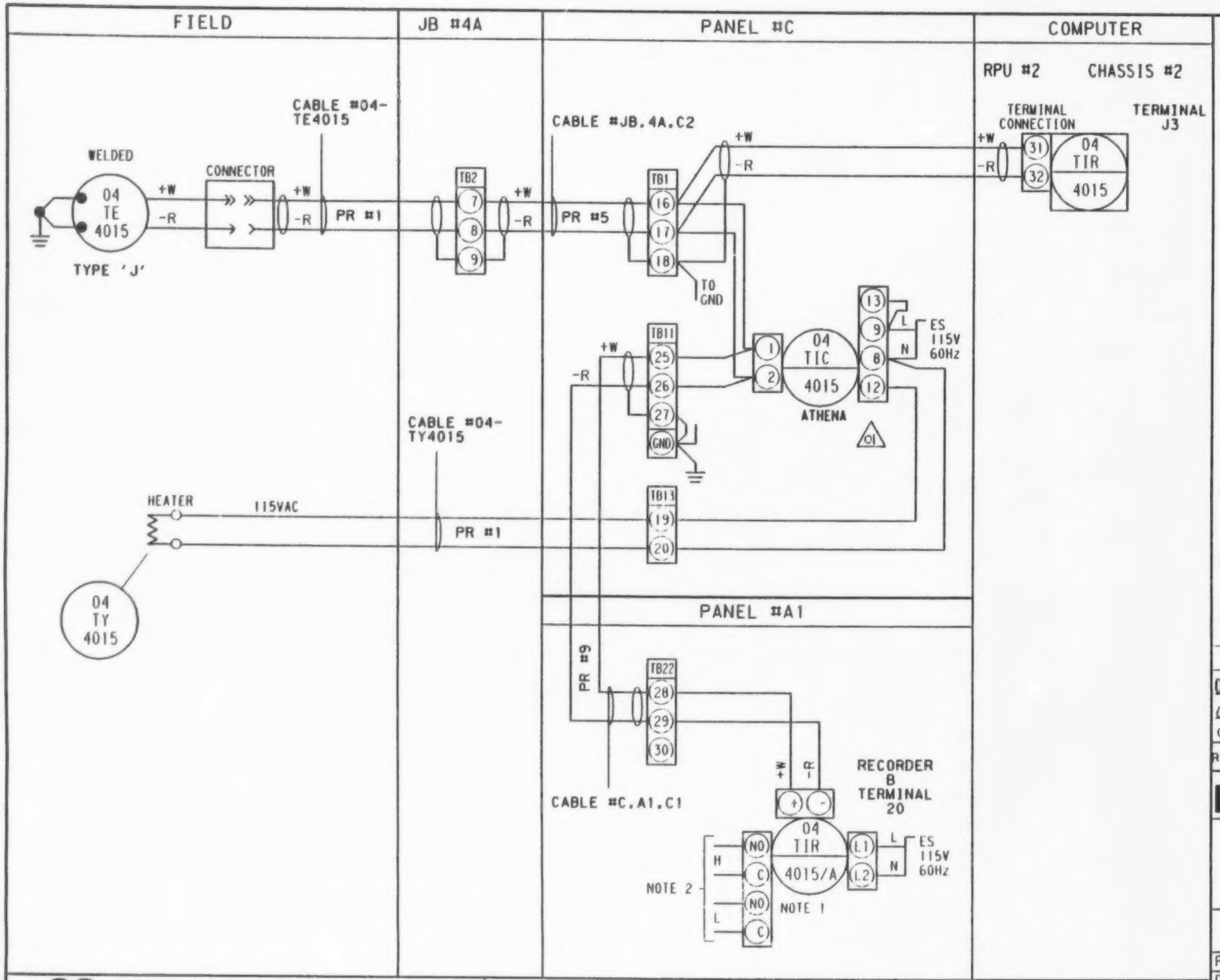

LOOP9

Monenco Consultants Limited

WORK ORDER No. DSS 8279-3

REG. No. 203955

NOTES:

1. POINT-ON "YEW" MULTIPOINT RECORDER.
2. ALARM-WIRED TO COMMON PANEL ALARM. ONE SET OF ALARM CONTACTS PER RECORDER ARE COMMON TO ALL POINTS.

GENERAL NOTES:

A. 24 VAC Power Supply from GFC, Hammond Series Power Supply in panel.

B. 4-20mA signals to computer are shunted by EMR with a resistor to provide voltage signal to computer card.

C. Compatibility of voltage signals to computer programmed by EMR.

REV	DATE	DESCRIPTION	CHK	MEC APP	EMR APP
02	86.09	PH.1 FINAL	P	WAE	
01	86.08.4	TIC TERMINAL #'S REVISED	RPJ		
00	JUL 86.14	FOR EMR APPROVAL	RW		✓

Energy, Mines and Resources Canada / Énergie, Mines et Ressources Canada

LOOP DIAGRAM
04-T-4015
AREA 4
HEAVY OIL SYSTEM

EMR COPROCESSING PILOT PLANT
PP3

PID No.		D-3-4 -MP-1	
DRAWN	CAD	DATE	86.07.13
CHKD			REV
DESIGN			02

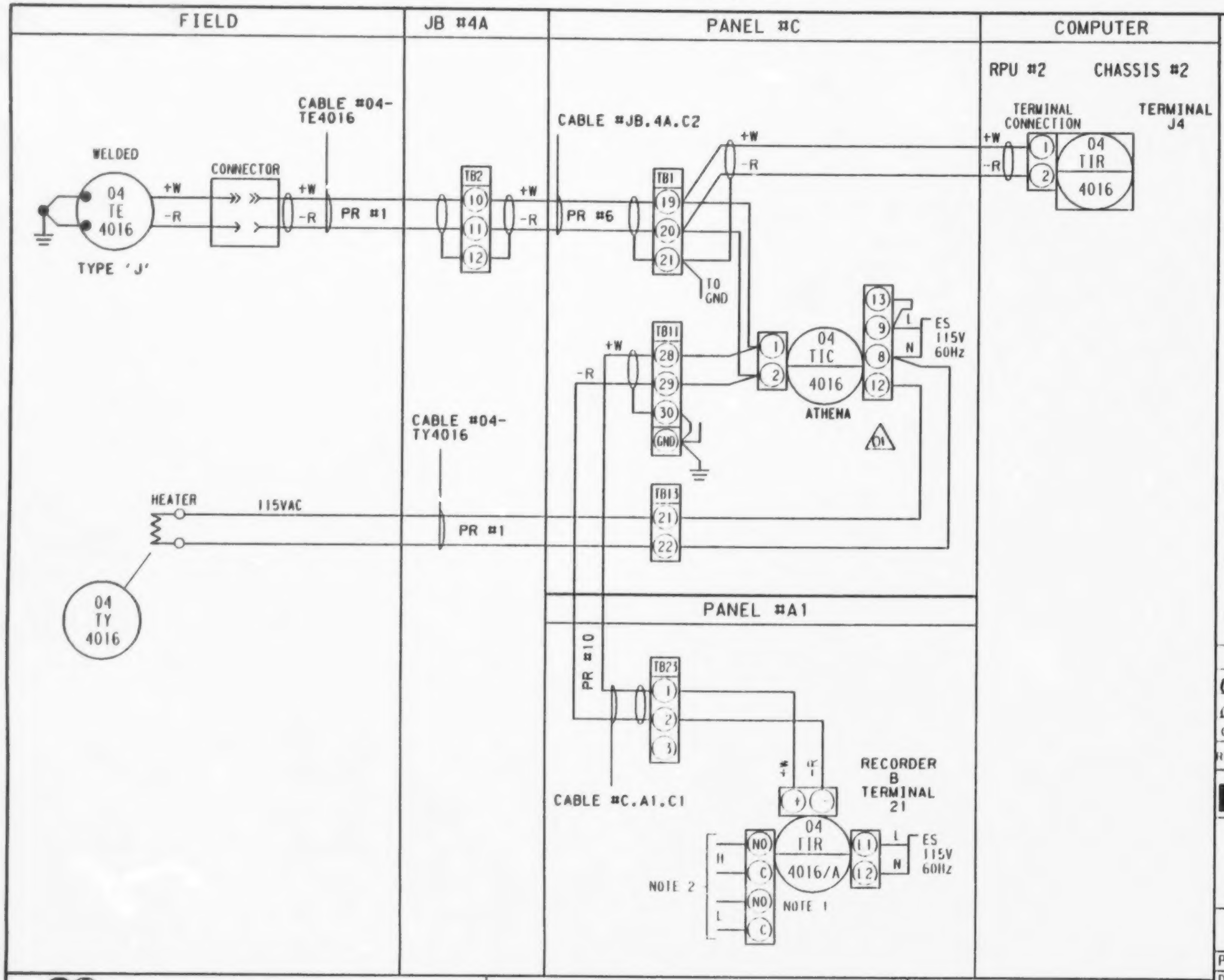

NOTES:

1. POINT-ON "YEW" MULTIPOINT RECORDER.
2. ALARM-WIRED TO COMMON PANEL ALARM. ONE SET OF ALARM CONTACTS PER RECORDER ARE COMMON TO ALL POINTS.

GENERAL NOTES:

A. 24 VAC Power Supply from GFC, Hammond Series Power Supply in panel.

B. 4-20mA signals to computer are shunted by EMR with a resistor to provide voltage signal to computer card.

C. Compatibility of voltage signals to computer programmed by EMR.

REV	DATE	DESCRIPTION	CHK	MEC APP	EMR APP
02	86.09	PH.4 FINAL	P	MP	
01	86.08.4	TIC TERMINAL #'s REVISED	RN		
00	JUL 86.14	FOR EMR APPROVAL	HW		✓

Energy, Mines and Resources Canada — Énergie, Mines et Ressources Canada

LOOP DIAGRAM
04-T-4016
AREA 4
HEAVY OIL SYSTEM

EMR COPROCESSING PILOT PLANT
PP3

PID No.	D-3-4 -MP-1		
DRAWN	CAD	DATE	86.07.1?
CHKD			REV
DESIGN			02

Monenco Consultants Limited — WORK ORDER No. DSS 8279-3 — REG. No. 203956

LOOP9

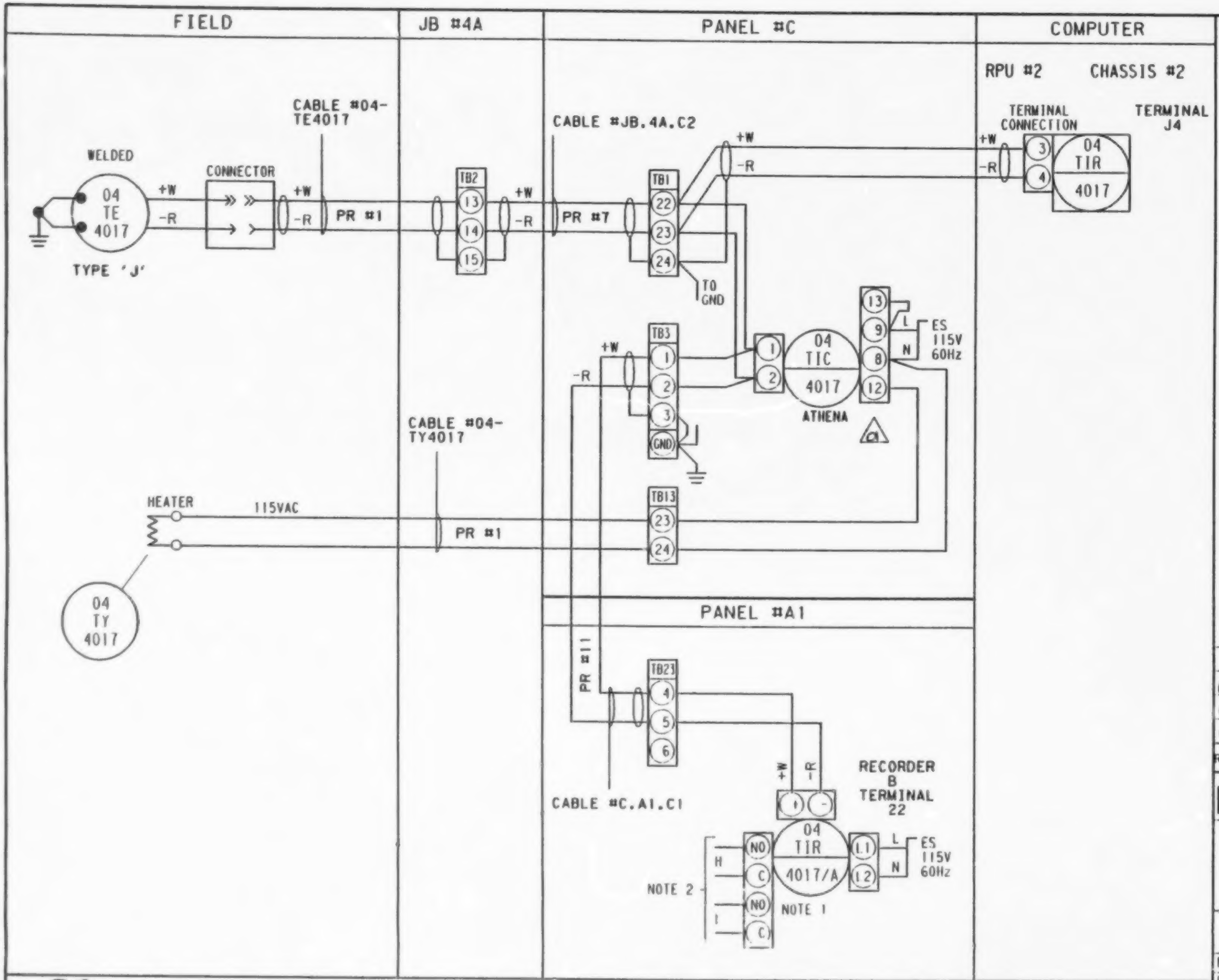

NOTES:
1. POINT-ON "YEW" MULTIPOINT RECORDER.
2. ALARM-WIRED TO COMMON PANEL ALARM. ONE SET OF ALARM CONTACTS PER RECORDER ARE COMMON TO ALL POINTS.

GENERAL NOTES:

A. 24 VAC Power Supply from GFC, Hammond Series Power Supply in panel.

B. 4-20mA signals to computer are shunted by EMR with a resistor to provide voltage signal to computer card.

C. Compatibility of voltage signals to computer programmed by EMR.

REV	DATE	DESCRIPTION	CHK	MEC APP	EMR APP
02	86.09	PH.1 FINAL			
01	86.08.4	TIC TERMINAL #'s REVISED			
00	JUL 86.14	FOR EMR APPROVAL	RW		✓

Energy, Mines and Resources Canada — Énergie, Mines et Ressources Canada

LOOP DIAGRAM
04-T-4017
AREA 4
HEAVY OIL SYSTEM

EMR COPROCESSING PILOT PLANT
PP3

PID No. D-3-4 -MP-1
DRAWN CAD DATE 86.07.13
CHKD
DESIGN
REV 02

Monenco Consultants Limited

WORK ORDER No. DSS 8279-3

REG. No. 203957

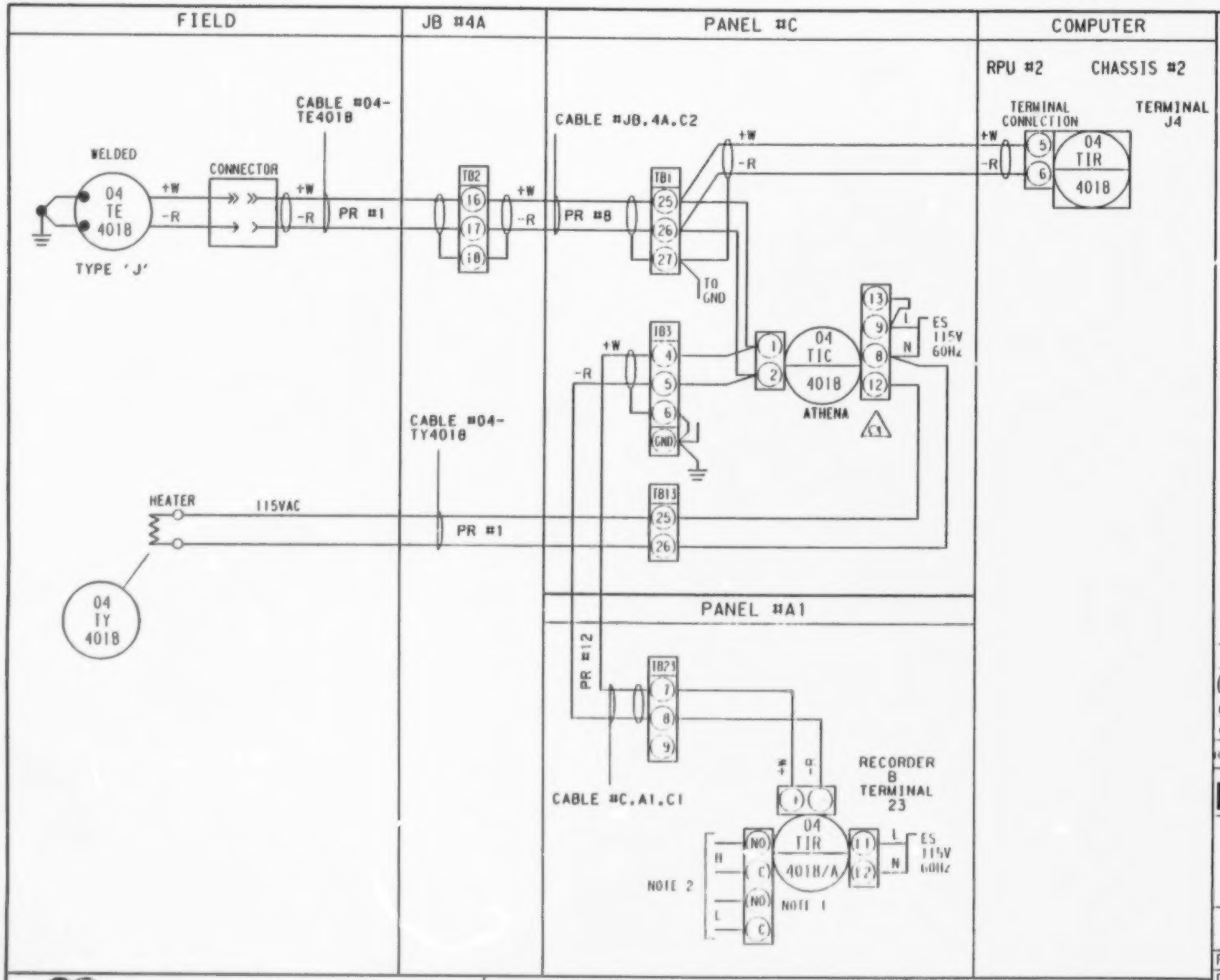

NOTES:
1. POINT-ON "YEW" MULTIPOINT RECORDER.
2. ALARM-WIRED TO COMMON PANEL ALARM. ONE SET OF ALARM CONTACTS PER RECORDER ARE COMMON TO ALL POINTS.

GENERAL NOTES:

A. 24 VAC Power Supply from GFC, Hammond Series Power Supply in panel.

B. 4-20mA signals to computer are shunted by EMR with a resistor to provide voltage signal to computer card.

C. Compatibility of voltage signals to computer programmed by EMR.

REV	DATE	DESCRIPTION	CHK	MEC APP	EMR APP
02	86.09	PH.4 FINAL	CP	MP	
01	86.08.4	TIC TERMINAL #s REVISED	RAJ		
00	JUL 86.14	FOR EMR APPROVAL	RW		✓

Energy, Mines and Resources Canada / Énergie, Mines et Ressources Canada

LOOP DIAGRAM
04-T-4018
AREA 4
HEAVY OIL SYSTEM

EMR COPROCESSING PILOT PLANT
PP3

PID No.	D-3-4 -MP-1		
DRAWN	CAD	DATE	86.07.13
CHKD			REV
DESIGN			02

Monenco Consultants Limited | WORK ORDER No. DSS 8279-3 | REG. No. 203958

LOOP9

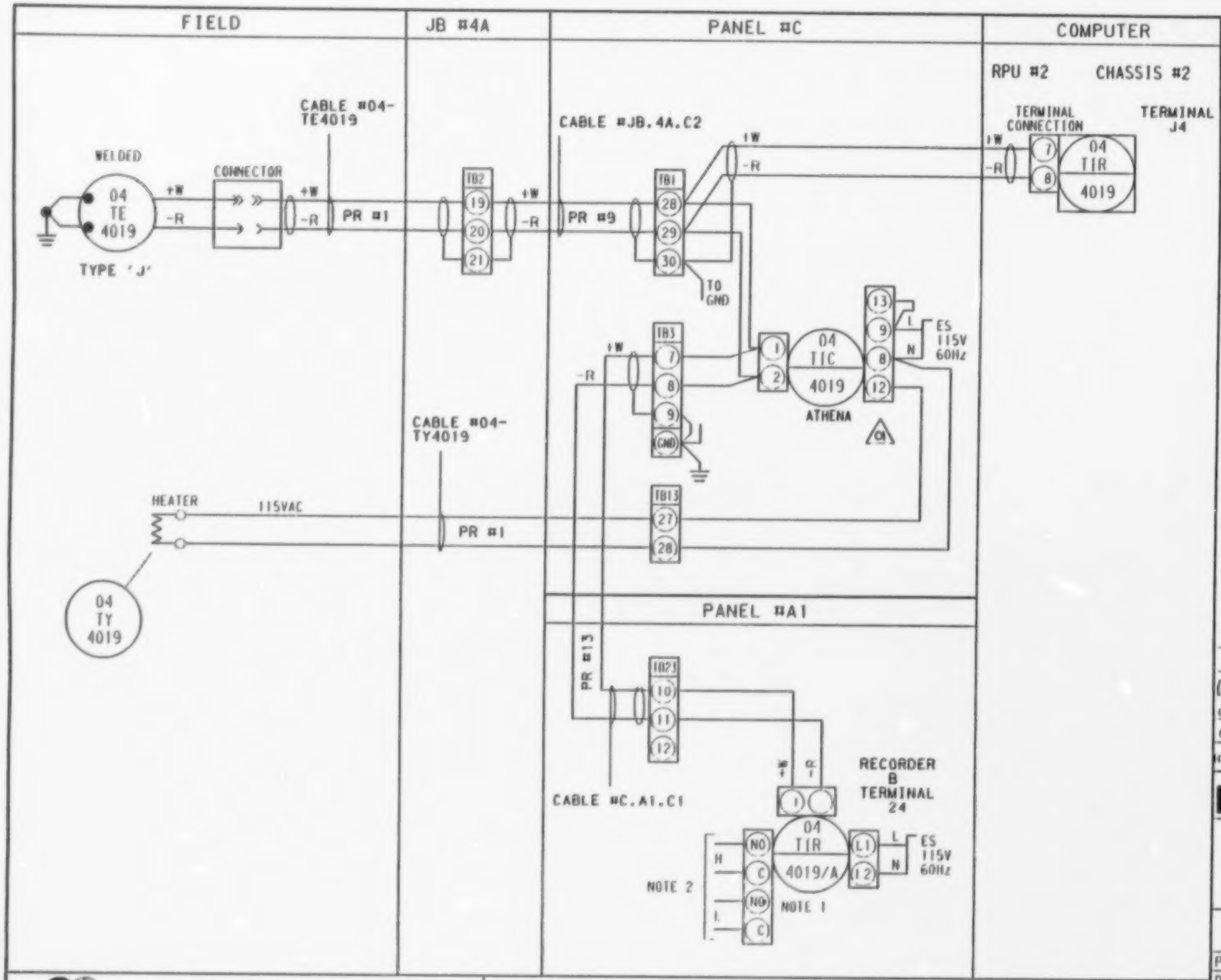

NOTES:

1. POINT-ON "YEW" MULTIPOINT RECORDER.
2. ALARM-WIRED TO COMMON PANEL ALARM. ONE SET OF ALARM CONTACTS PER RECORDER ARE COMMON TO ALL POINTS.

GENERAL NOTES:

A. 24 VAC Power Supply from GFC, Hammond Series Power Supply in panel.

B. 4-20mA signals to computer are shunted by EMR with a resistor to provide voltage signal to computer card.

C. Compatibility of voltage signals to computer programmed by EMR.

REV	DATE	DESCRIPTION	CHK	MEC APP	EMR APP
02	86.09	AH4 FINAL	P		
01	86.08.4	TIC TERMINAL #'S REVISED	RRJ		
00	JUL 86.14	FOR EMR APPROVAL	RW		✓

Energy, Mines and Resources Canada — Énergie, Mines et Ressources Canada

LOOP DIAGRAM
04-T-4019
AREA 4
HEAVY OIL SYSTEM

EMR COPROCESSING PILOT PLANT
PP3

PID No.	D-3-4 -MP-1	
DRAWN	CAD	DATE 86.07.13
CHKD		REV
DESIGN		02

Monenco Consultants Limited — WORK ORDER No. DSS 8279-3 — REG. No. 203959

LOOP9

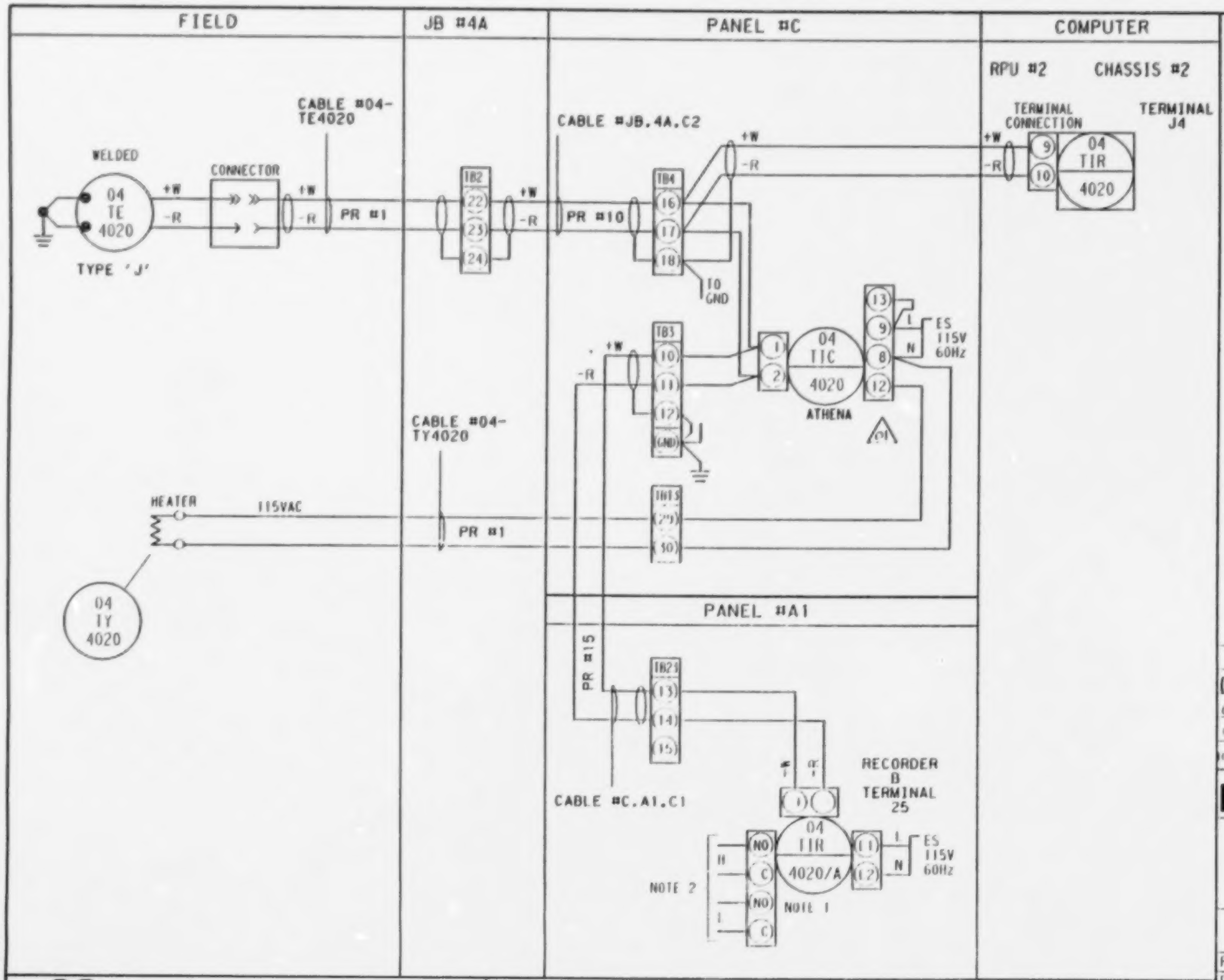

NOTES:
1. POINT-ON "YEW" MULTIPOINT RECORDER.
2. ALARM-WIRED TO COMMON PANEL ALARM. ONE SET OF ALARM CONTACTS PER RECORDER ARE COMMON TO ALL POINTS.

GENERAL NOTES:

A. 24 VAC Power Supply from GIC, Hammond Series Power Supply in panel.

B. 4-20mA signals to computer are shunted by EMR with a resistor to provide voltage signal to computer card.

C. Compatibility of voltage signals to computer programmed by EMR.

REV	DATE	DESCRIPTION	CHK	MEC APP	EMR APP
02	86.09	PIL-1 FINAL			
01	86.08.4	TC TERMINAL #5 REVISED	RR		
00	JUL 86.14	FOR EMR APPROVAL	RW		/

Energy, Mines and Resources Canada — Énergie, Mines et Ressources Canada

LOOP DIAGRAM
04-T-4020
AREA 4
HEAVY OIL SYSTEM

EMR COPROCESSING PILOT PLANT
PP3

PID No.	D-3-4 -MP-1		
DRAWN	CAD	DATE	86.07.13
CHKD		REV	02
DESIGN			

Monenco Consultants Limited | WORK ORDER No. DSS 8279-3 | REG. No. 203960

LOOP9

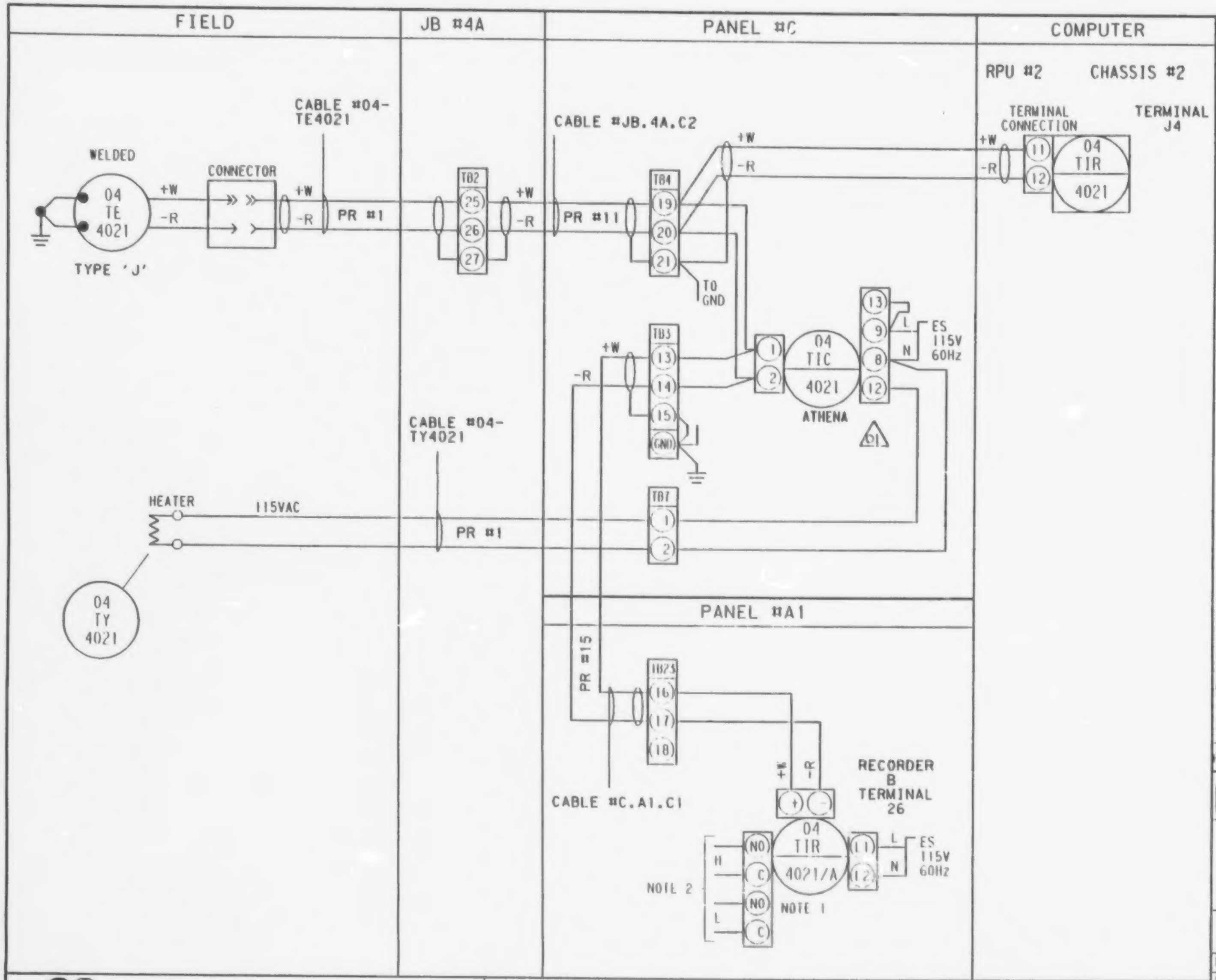

NOTES:

1. POINT-ON "YEW" MULTIPOINT RECORDER.
2. ALARM-WIRED TO COMMON PANEL ALARM. ONE SET OF ALARM CONTACTS PER RECORDER ARE COMMON TO ALL POINTS.

GENERAL NOTES:

A. 24 VAC Power Supply from GFC, Hammond Series Power Supply in panel.

B. 4-20mA signals to computer are shunted by EMR with a resistor to provide voltage signal to computer card.

C. Compatibility of voltage signals to computer programmed by EMR.

REV	DATE	DESCRIPTION	CHK	MEC APP	EMR APP
02	86.09	A1.1 FINAL	JP	WAP	
01	86.08.4	TIC TERMINAL #S REVISED	RPW		
00	JUL 86.14	FOR EMR APPROVAL	RW		✓

Energy, Mines and Resources Canada — Énergie, Mines et Ressources Canada

LOOP DIAGRAM
04-T-4021

AREA 4

HEAVY OIL SYSTEM

EMR COPROCESSING PILOT PLANT PP3

PID No.	D-3-4 -MP-1		
DRAWN	CAD	DATE	86.07.13
CHKD			REV
DESIGN			02

Monenco Consultants Limited

WORK ORDER No. DSS 8279-3

REG. No. 203961

LOOP9

B

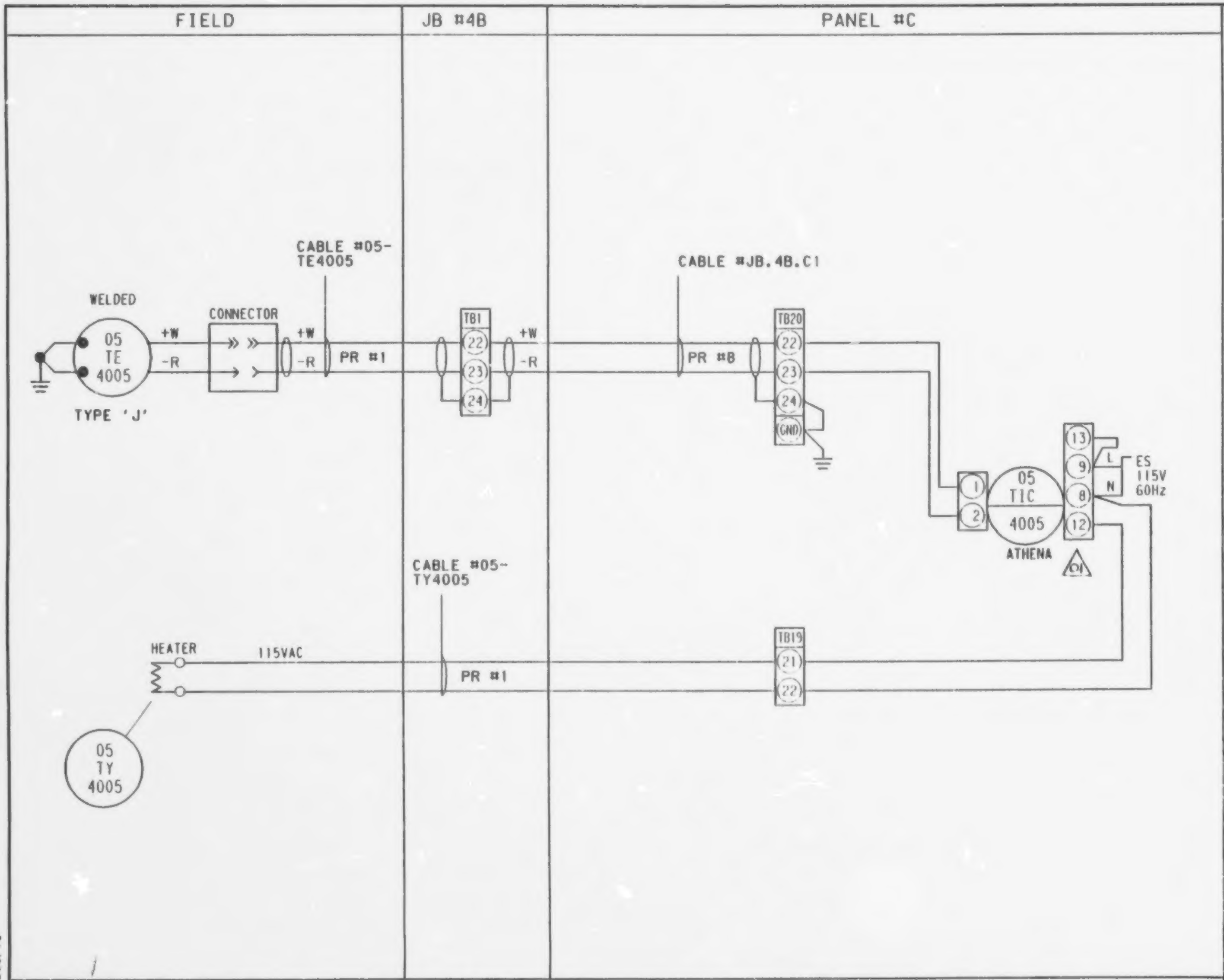

NOTES:

GENERAL NOTES:

A. 24 VAC Power Supply from GFC, Hammond Series Power Supply in panel.

B. 4-20mA signals to computer are shunted by EMR with a resistor to provide voltage signal to computer card.

C. Compatibility of voltage signals to computer programmed by EMR.

REV	DATE	DESCRIPTION	CHK	MEC APP	EMR APP
02	86.09	PH.4 FINAL	CP	WR	
01	86.08.6	TIC TERMINAL #'s REVISED	PAJ		
00	JUL 86.14	FOR EMR APPROVAL	RW		✓

Energy, Mines and Resources Canada / Energie, Mines et Ressources Canada

LOOP DIAGRAM
05-T-4005
AREA 5
LIGHT OIL SYSTEM

EMR COPROCESSING PILOT PLANT
PP3

PID No.	D-3-5 -MP-1		
DRAWN	CAD	DATE	86.07.13
CHKD		REV	02
DESIGN			

LOOP18

Monenco Consultants Limited | WORK ORDER No. DSS 8279-3 | REG. No. 204215

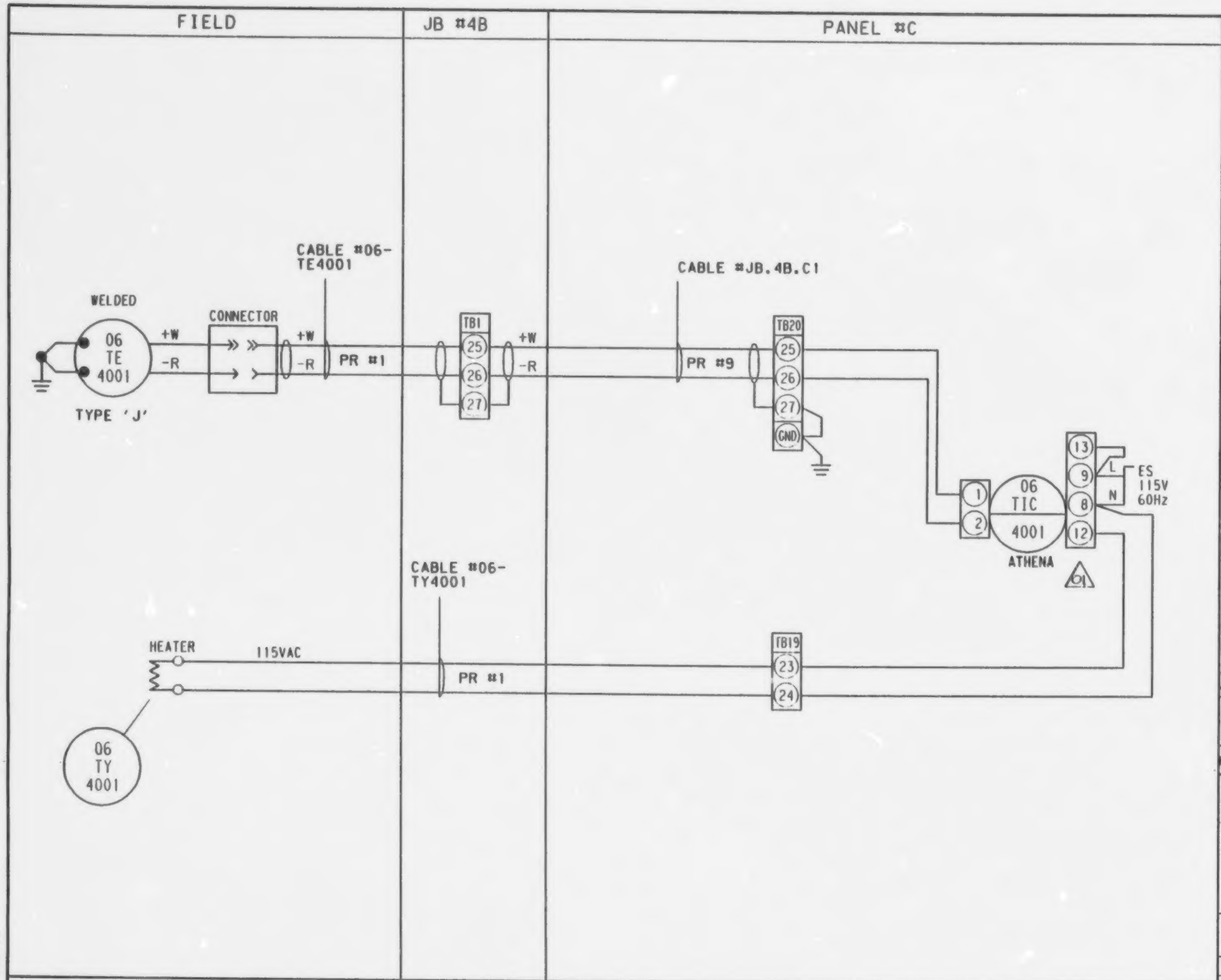

NOTES:

GENERAL NOTES:

A. 24 VAC Power Supply from GFC, Hammond Series Power Supply in panel.

B. 4-20mA signals to computer are shunted by EMR with a resistor to provide voltage signal to computer card.

C. Compatibility of voltage signals to computer programmed by EMR.

REV	DATE	DESCRIPTION	CHK	MEC APP	EMR APP
02	86.09	PH.1 FINAL	CP	[illegible]	
01	86.08.6	TIC [illegible] #5 REVISED	PAJ		
00	JUL 86.14	FOR EMR APPROVAL	RW		✓

Energy, Mines and Resources Canada — Énergie, Mines et Ressources Canada

LOOP DIAGRAM
06-T-4001

AREA 6
WATER SCRUBBER SYSTEM

EMR COPROCESSING PILOT PLANT
PP3

PID No.	D-3-6 -MP-1		
DRAWN	CAD	DATE	86.07.13
CHKD			REV
DESIGN			02

Monenco Consultants Limited

WORK ORDER No. DSS 8279-3

REG. No. 204216

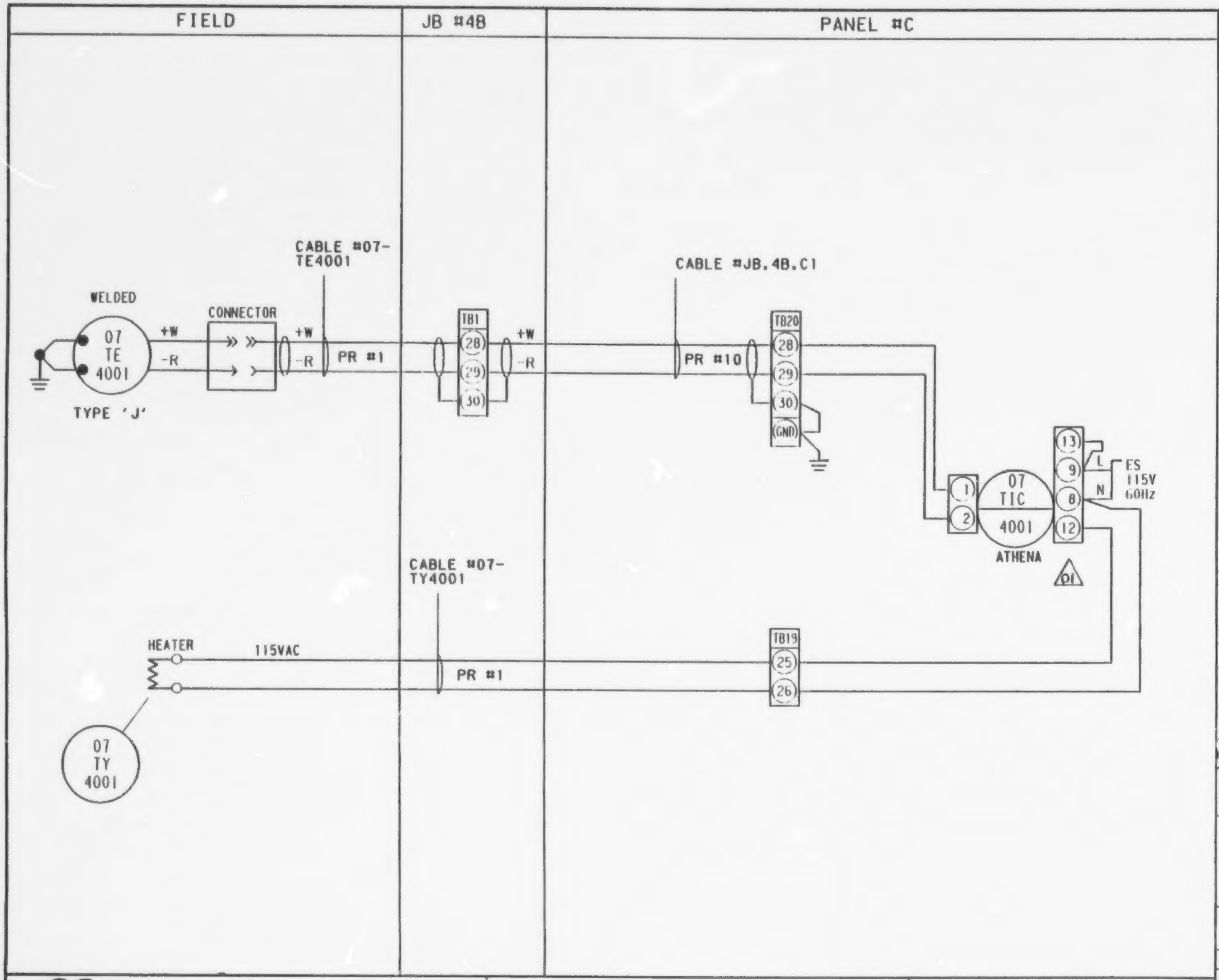

NOTES:

GENERAL NOTES:

A. 24 VAC Power Supply from GFC, Hammond Series Power Supply in panel.

B. 4-20mA signals to computer are shunted by EMR with a resistor to provide voltage signal to computer card.

C. Compatibility of voltage signals to computer programmed by EMR.

REV	DATE	DESCRIPTION	CHK	MEC APP	EMR APP
02	86.09	PH.1 FINAL	CP	WS	
01	86.08.6	TIC TERMINAL #'s REVISED	RPW		
00	JUL 86.14	FOR EMR APPROVAL	RW		✓

Energy, Mines and Resources Canada / Énergie, Mines et Ressources Canada

LOOP DIAGRAM
07-T-4001
AREA 7
OIL SCRUBBER SYSTEM

EMR COPROCESSING PILOT PLANT
PP3

PID No.	D-3-7 -MP-1		
DRAWN	CAD	DATE	86.07.13
CHKD			REV
DESIGN			02

Monenco Consultants Limited | WORK ORDER No. DSS 8279-3 | REG. No. 204217

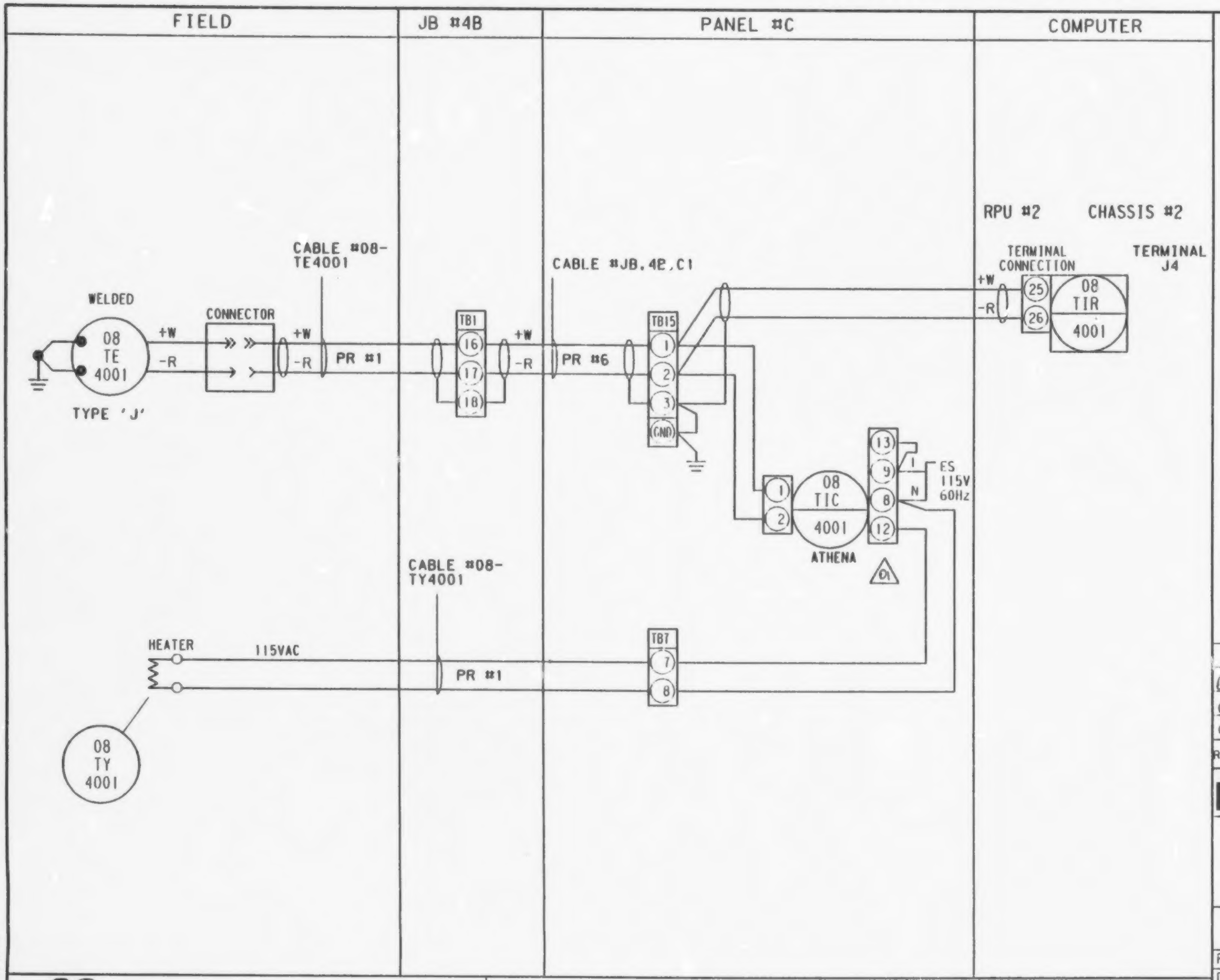

NOTES:

GENERAL NOTES:

A. 24 VAC Power Supply from GFC, Hammond Series Power Supply in panel.

B. 4-20mA signals to computer are shunted by EMR with a resistor to provide voltage signal to computer card.

C. Compatibility of voltage signals to computer programmed by EMR.

REV	DATE	DESCRIPTION	CHK	MEC APP	EMR APP
02	86.09	PH.1 FINAL	CP	WAP	
01	86.08.4	TIC TERMINAL #'s REVISED	RR		
00	JUL 86.13	FOR EMR APPROVAL	RW		✓

Energy, Mines and Resources Canada — Énergie, Mines et Ressources Canada

LOOP DIAGRAM
08-T-4001

AREA 8

RECYCLE GAS SYSTEM

EMR COPROCESSING PILOT PLANT PP3

PID No.	D-3-8 -MP-1		
DRAWN	CAD	DATE	86.07.13
CHKD			REV
DESIGN			02

LOOP4

Monenco Consultants Limited

WORK ORDER No. DSS 8279-3

REG. No. 203996

B

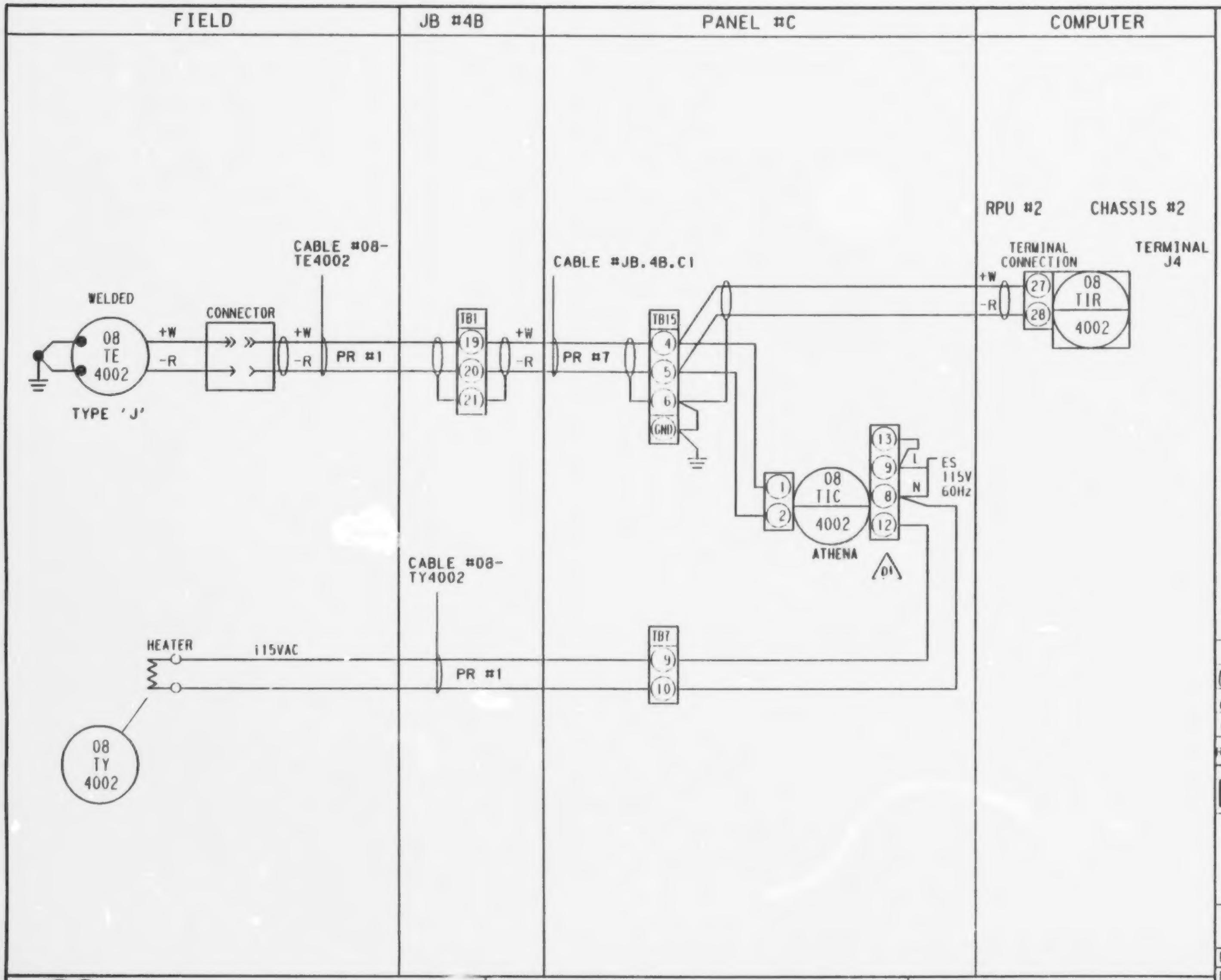

NOTES:

GENERAL NOTES:

A. 24 VAC Power Supply from GFC, Hammond Series Power Supply in panel.

B. 4-20mA signals to computer are shunted by EMR with a resistor to provide voltage signal to computer card.

C. Compatibility of voltage signals to computer programmed by EMR.

REV	DATE	DESCRIPTION	CHK	MEC APP	EMR APP
02	86.09	PH.1 FINAL	CP	WP	
01	86.08.4	TIC TERMINAL #'s REVISED	RW		
00	JUL 86.14	FOR EMR APPROVAL	RW		✓

Energy, Mines and Resources Canada — Énergie, Mines et Ressources Canada

LOOP DIAGRAM 08-T-4002

AREA 8

RECYCLE GAS SYSTEM

EMR COPROCESSING PILOT PLANT PP3

PID No.	D-3-8 -MP-1
DRAWN	CAD
DATE	86.07.13
CHKD	
DESIGN	
REV	02

Monenco Consultants Limited

WORK ORDER No. DSS 8279-3

REG. No. 203997

LOOP4

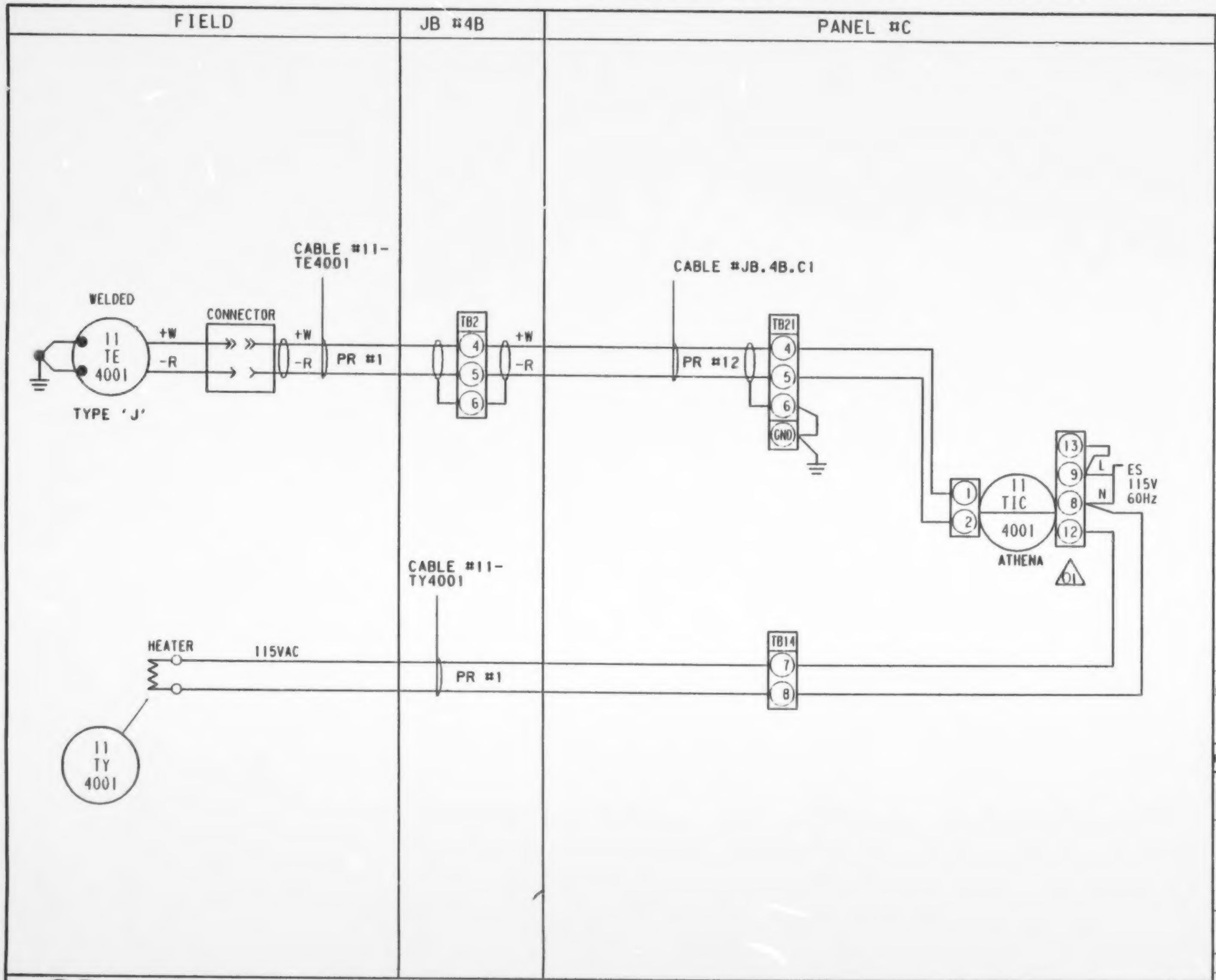

NOTES:

GENERAL NOTES:

A. 24 VAC Power Supply from GFC, Hammond Series Power Supply in panel.

B. 4-20mA signals to computer are shunted by EMR with a resistor to provide voltage signal to computer card.

C. Compatibility of voltage signals to computer programmed by EMR.

REV	DATE	DESCRIPTION	CHK	MEC APP	EMR APP
02	86.09	PH.1 FINAL			
01	86.08.7	TIC TERMINAL #'s REVISED			
00	JUL 86.14	FOR EMR APPROVAL	RW		✓

Energy, Mines and Resources Canada — Energie, Mines et Ressources Canada

LOOP DIAGRAM
11-T-4001
AREA 11
OIL AND VARSOL PURGE SYSTEM

EMR COPROCESSING PILOT PLANT PP3

PID No.	D-3-11-MP-1		
DRAWN	CAD	DATE	86.07.14
CHKD		REV	02
DESIGN			

Monenco Consultants Limited | WORK ORDER No. DSS 8279-3 | REG. No. 204218

LOOP18

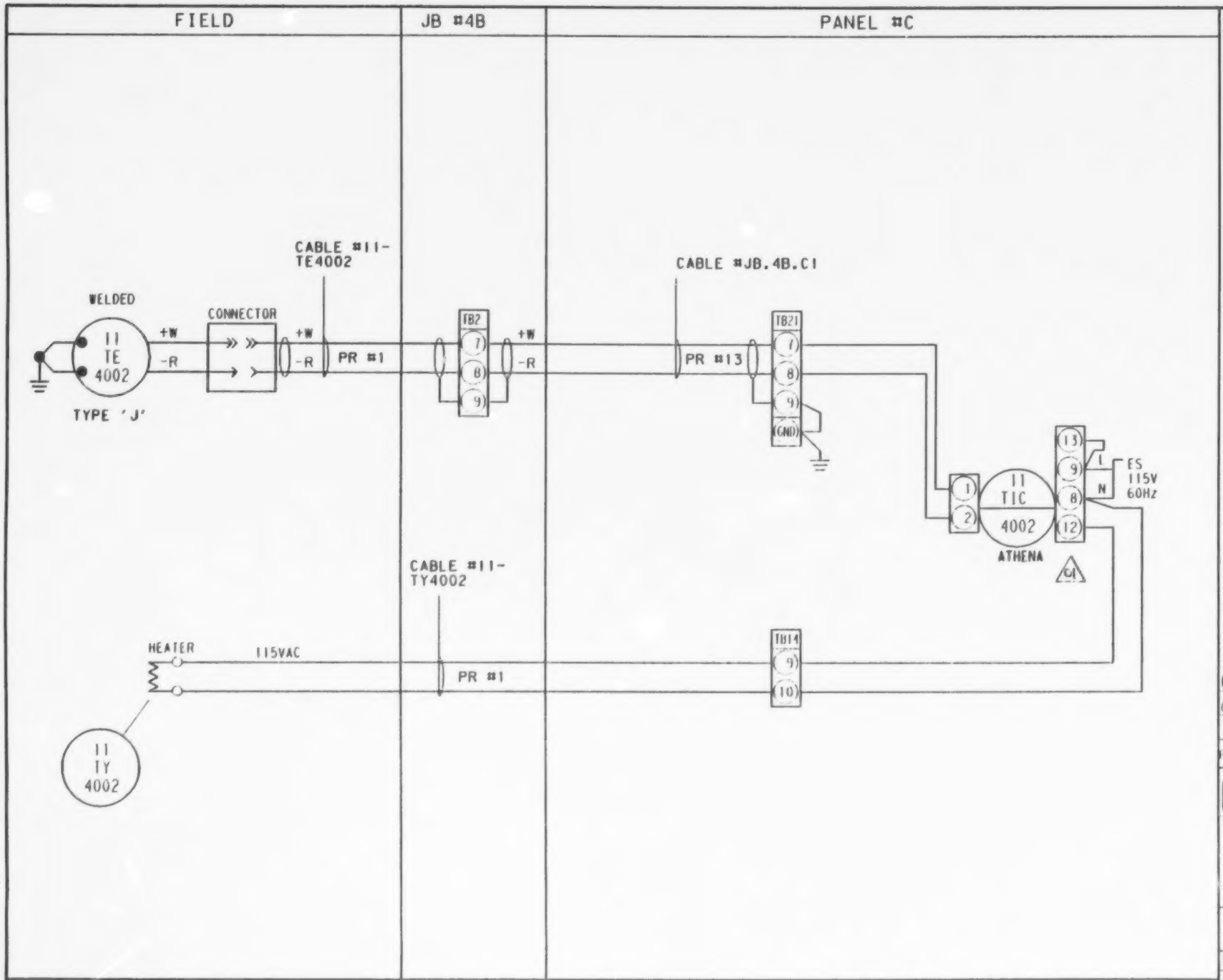

NOTES:

GENERAL NOTES:

A. 24 VAC Power Supply from GFC, Hammond Series Power Supply in panel.

B. 4-20mA signals to computer are shunted by EMR with a resistor to provide voltage signal to computer card.

C. Compatibility of voltage signals to computer programmed by EMR.

REV	DATE	DESCRIPTION	CHK	MEC APP	EMR APP
02	86.09	[illegible] FINAL	CF	[illegible]	
01	86.08.?	TIC TERMINAL #'S REVISED	[illegible]		
00	JUL 86.14	FOR EMR APPROVAL	RW		

Energy, Mines and Resources Canada — Energie, Mines et Ressources Canada

LOOP DIAGRAM
11-T-4002

AREA 11
OIL AND VARSOL PURGE SYSTEM

EMR COPROCESSING PILOT PLANT
PP3

PID No.	D-3-11-MP-1		
DRAWN	CAD	DATE	86.07.13
CHKD			REV
DESIGN			02

Monenco Consultants Limited

WORK ORDER No. DSS 8279-3

REG. No. 204219

LOOP18

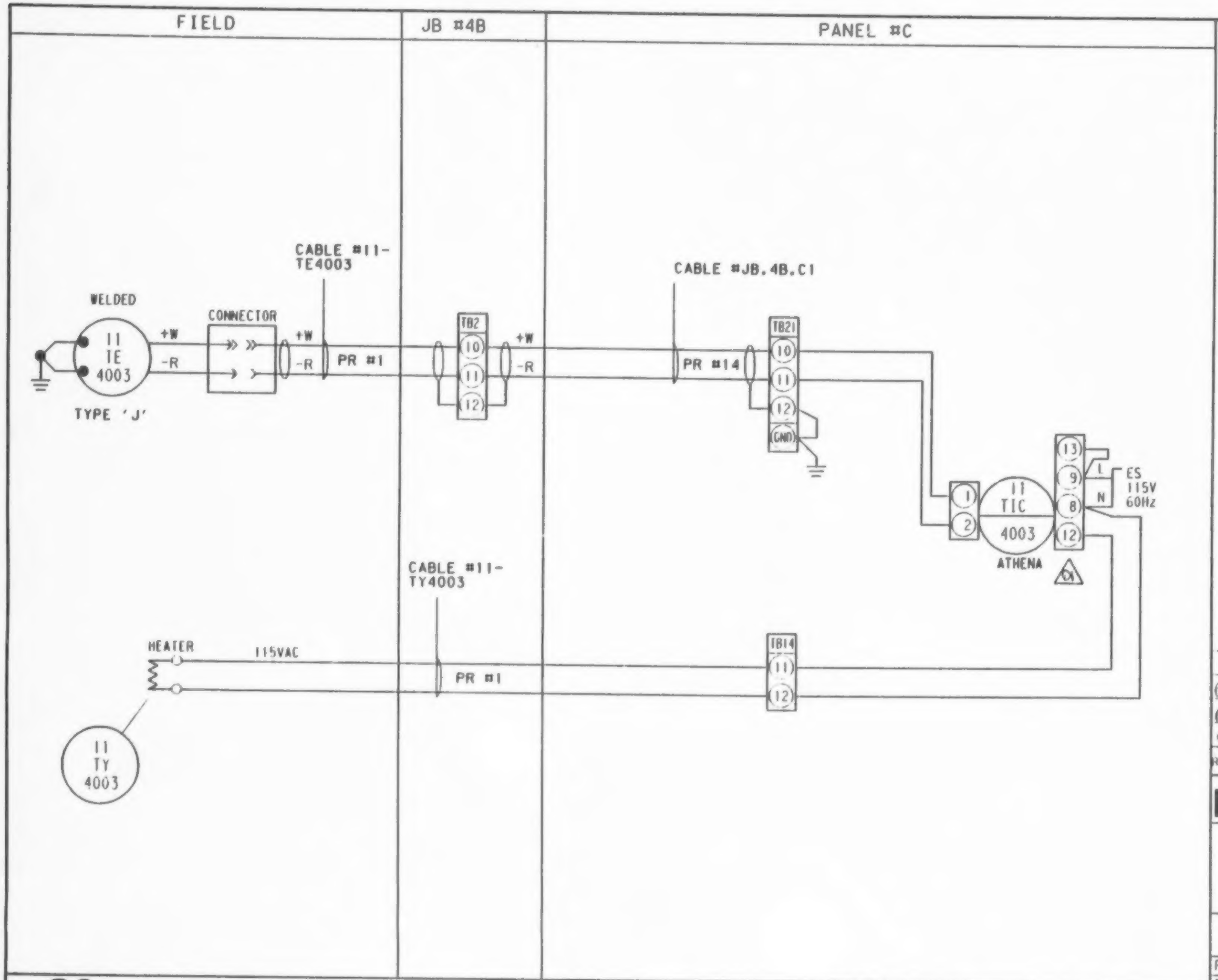

NOTES:

GENERAL NOTES:

A. 24 VAC Power Supply from GFC, Hammond Series Power Supply in panel.

B. 4-20mA signals to computer are shunted by EMR with a resistor to provide voltage signal to computer card.

C. Compatibility of voltage signals to computer programmed by EMR.

REV	DATE	DESCRIPTION	CHK	MEC APP	EMR APP
02	86.09	PH.4 FINAL	CP	MP	
01	86.08.7	TIC TERMINAL #'s REVISED	RW		
00	JUL 86.14	FOR EMR APPROVAL	RW		✓

Energy, Mines and Resources Canada — Énergie, Mines et Ressources Canada

LOOP DIAGRAM
11-T-4003
AREA 11
OIL AND VARSOL PURGE SYSTEM

EMR COPROCESSING PILOT PLANT
PP3

PID No.	D-3-11-MP-1		
DRAWN	CAD	DATE	86.07.13
CHKD		REV	02
DESIGN			

Monenco Consultants Limited

WORK ORDER No. DSS 8279-3

REG. No. 204220

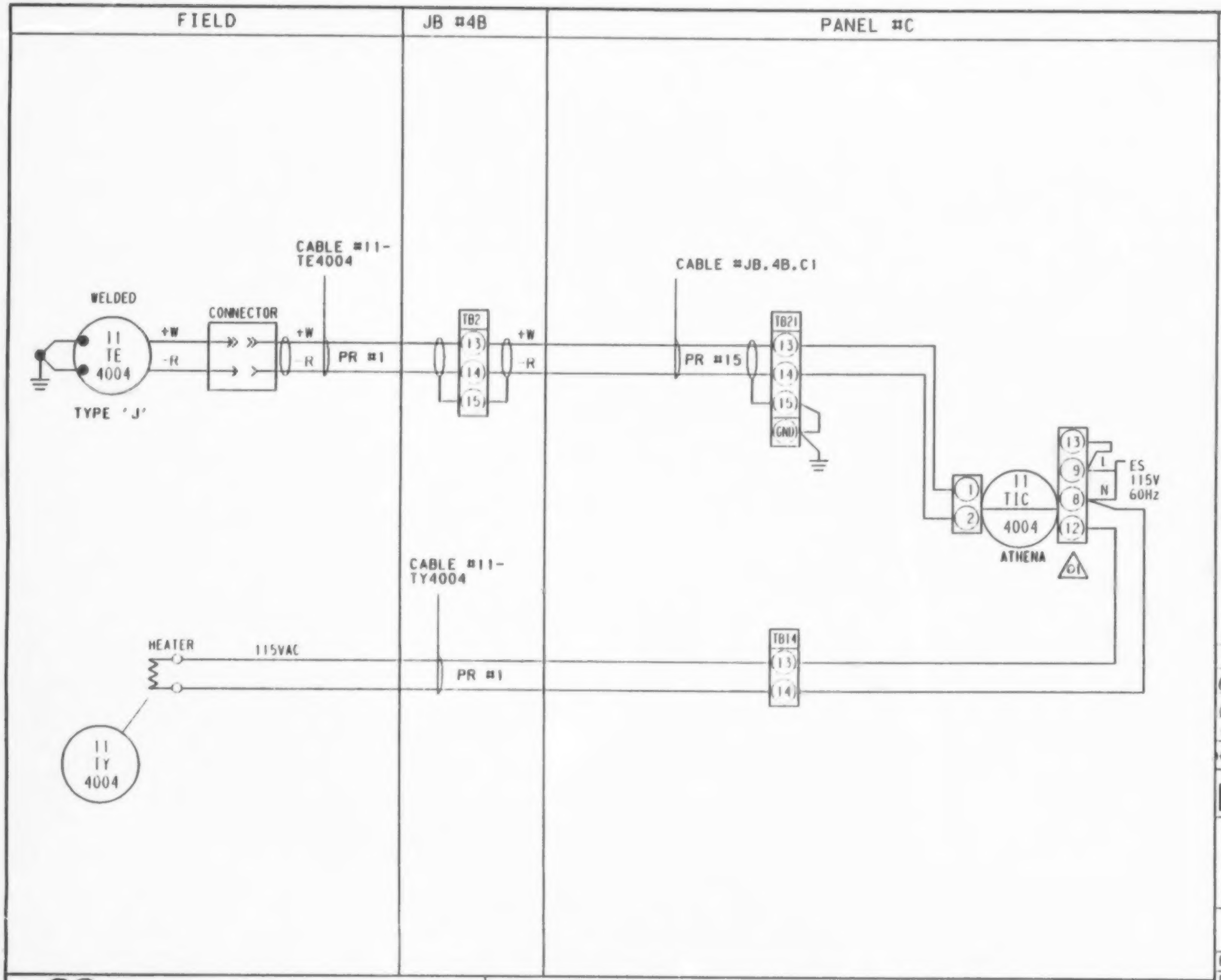

NOTES:

GENERAL NOTES:

A. 24 VAC Power Supply from GFC, Hammond Series Power Supply in panel.

B. 4-20mA signals to computer are shunted by EMR with a resistor to provide voltage signal to computer card.

C. Compatibility of voltage signals to computer programmed by EMR.

REV	DATE	DESCRIPTION	CHK	MEC APP	EMR APP
02	86.09	ISSUE FINAL	CH		
01	86.08.7	TIC TERMINAL #'s REVISED	RAJ		
00	JUL 86.14	FOR EMR APPROVAL	HW		✓

Energy, Mines and Resources Canada / Énergie, Mines et Ressources Canada

LOOP DIAGRAM
11-T-4004

AREA 11
OIL AND VARSOL PURGE SYSTEM

EMR COPROCESSING PILOT PLANT
PP3

PID No. D-3-11-MP-1
DRAWN CAD DATE 86.07.15
CHKD
DESIGN
REV 02

Monenco Consultants Limited

WORK ORDER No. DSS 8279-3

REG. No. 204221

LOOP18

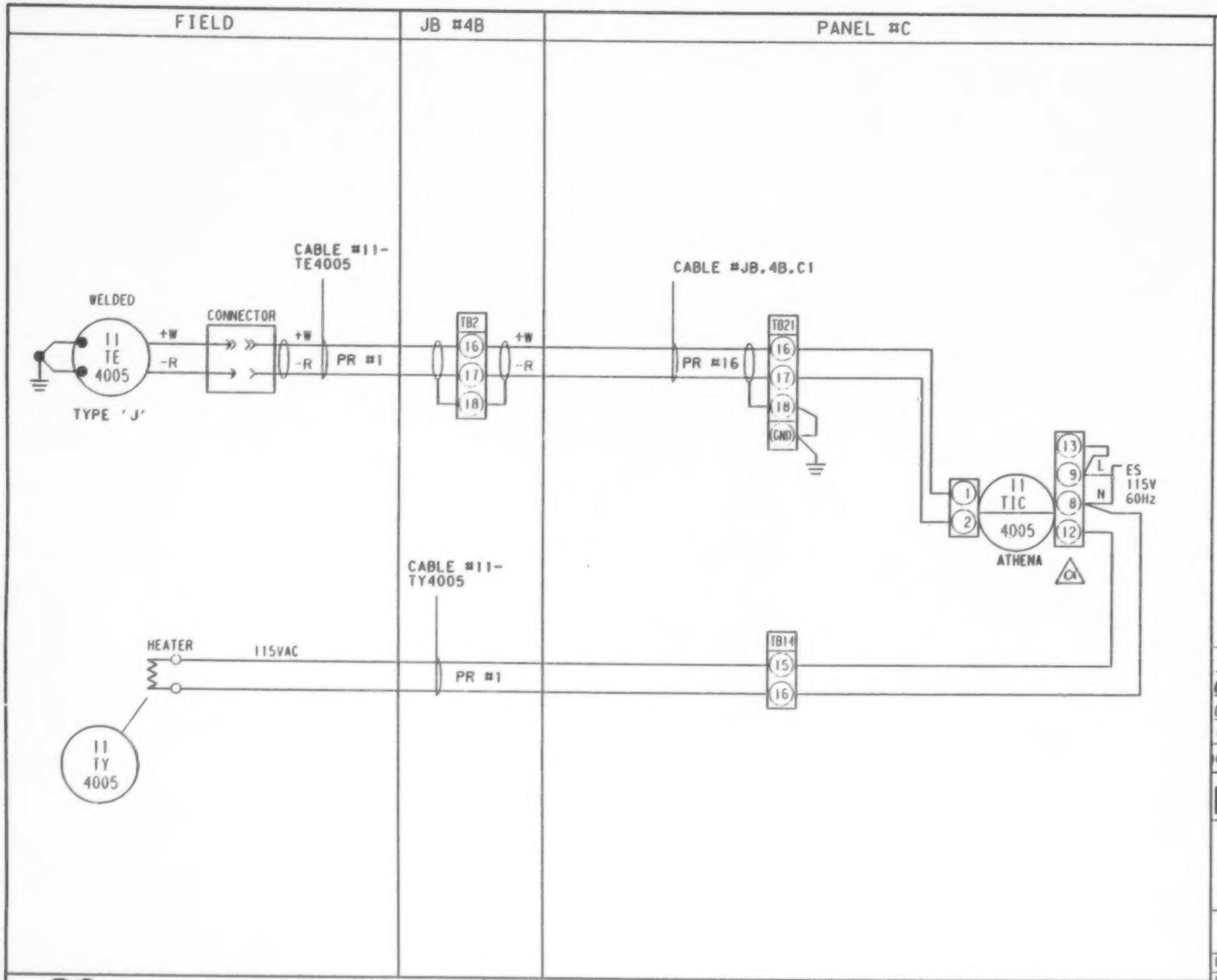

NOTES:

GENERAL NOTES:

A. 24 VAC Power Supply from GFC, Hammond Series Power Supply in panel.

B. 4-20mA signals to computer are shunted by EMR with a resistor to provide voltage signal to computer card.

C. Compatibility of voltage signals to computer programmed by EMR.

REV	DATE	DESCRIPTION	CHK	MEC APP	EMR APP
02	86.09	PH 4 FINAL	CP	WR?	
01	86.08.7	TIC TERMINAL #'s REVISED	RP		
00	JUL 86.14	FOR EMR APPROVAL	RW		✓

Energy, Mines and Resources Canada / Énergie, Mines et Ressources Canada

LOOP DIAGRAM
11-T-4005
AREA 11
OIL AND VARSOL PURGE SYSTEM

EMR COPROCESSING PILOT PLANT
PP3

PID No. D-3-11-MP-1
DRAWN CAD DATE 86.0?.1?
CHKD
DESIGN
REV 02

Monenco Consultants Limited | WORK ORDER No. DSS 8279-3 | REG. No. 204222

LOOP18

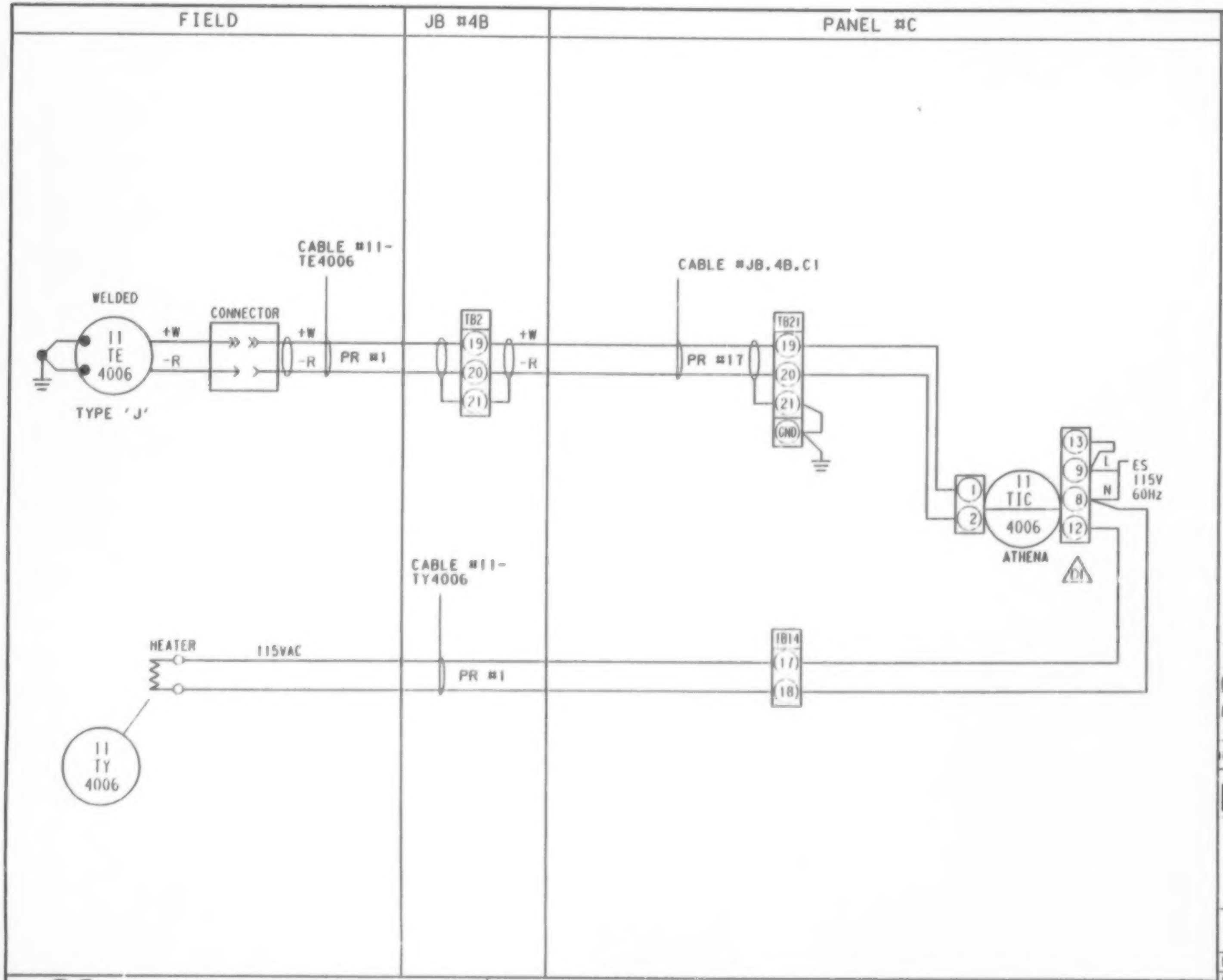

NOTES:

GENERAL NOTES:

A. 24 VAC Power Supply from GFC, Hammond Series Power Supply in panel.

B. 4-20mA signals to computer are shunted by EMR with a resistor to provide voltage signal to computer card.

C. Compatibility of voltage signals to computer programmed by EMR.

REV	DATE	DESCRIPTION	CHK	MEC APP	EMR APP
02	86.09	[illegible] FINAL	[illegible]	[illegible]	
01	86.09.7	TIC TERMINAL #S REVISED	[illegible]		
00	JUN 86.14	FOR EMR APPROVAL	HW		✓

Energy, Mines and Resources Canada — Énergie, Mines et Ressources Canada

LOOP DIAGRAM
11-T-4006
AREA 11
OIL AND VARSOL PURGE SYSTEM

EMR COPROCESSING PILOT PLANT
PP3

PID No. D-3-11-MP-1
DRAWN CAD DATE 86.07.1
CHKD REV
DESIGN 02

Monenco Consultants Limited | WORK ORDER No. DSS 8279-3 | REG. No. 204223

LOOP18

THERMOCOUPLE LOOPS - WITH PID TEMPERATURE CONTROLLERS

LOOP NUMBER	REGISTRATION NUMBER	LOOP NUMBER	REGISTRATION NUMBER	LOOP NUMBER	REGISTRATION NUMBER
02-T-4005	203940				
02-T-4007	203963				
02-T-4009	203964				
02-T-4011	203965				
02-T-4013	203966				
03-T-4009	203969				
03-T-4010	203970				
03-T-4011	203971				
03-T-4012	203972				
03-T-4013	203973				
03-T-4014	203974				
03-T-4015	203975				
03-T-4016	203976				
03-T-4100	203977				
03-T-4101	203978				
03-T-4102	203979				
03-T-4103	203980				
03-T-4104	203981				
03-T-4105	203982				
03-T-4106	203983				
03-T-4107	203984				
03-T-4130	203987				
03-T-4131	203988				
03-T-4132	203989				
03-T-4133	203990				
04-T-4010	203992				
04-T-4009	203993				
04-T-4008	203994				
04-T-4007	203995				
05-T-4001	204022 (rev 01)				

NOTES:

SHIELDING, GROUNDING, CONDUCTOR IDENTIFICATION:

1. MULTICORE TX WIRE TO HAVE INDIVIDUAL PAIR SHIELDS. ALL OTHER SIGNALS UNSHIELDED.
2. ENSURE SHIELD CONTINUITY FROM SOURCE TO RECEIVER THROUGH INTERMEDIATE TERMINALS.
3. GROUND SHIELD AT INSTRUMENT PANEL ONLY. JUMPER ALL SHIELDS PER LOOP. IF RECEIVER AND SOURCE ARE IN FIELD, GROUND SHIELD AT SOURCE INSTRUMENT.
4. INTERNAL WIRING IN PANELS NOT TO BE SHIELDED.
5. ALL OUTER CASES OF INSTRUMENT CASES TO BE GROUNDED.
6. CONDUCTOR IDENTIFICATION:

   a) SIGNAL WIRE - CABLE NUMBER TO USE TAG No. OF SOURCE INSTRUMENT PLUS SERIAL No.-1, -2, etc.

   b) TX WIRE - USE SIGNAL WIRE DESIGNATION FOR CABLE No. AND PAIR No.

SYMBOLS:

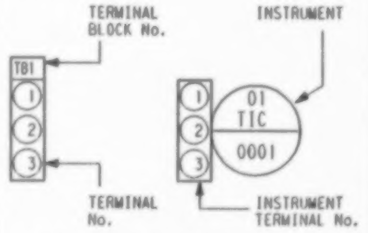

SEE PID, INSTRUMENT SYMBOL SHEET D-3-01-MP-2 FOR INSTRUMENT SYMBOL IDENTIFICATION PER ISA S51.1.

REV	DATE	DESCRIPTION	CHK	MEC APP	EMR APP
02	86.09	PH.4 FINAL	CP	[illegible]	
01	86.07.29	LOOP + REG. NO. ADDED	RPW		
00	86.07.14	FOR EMR APPROVAL	RPW		✓

Energy, Mines and Resources Canada — Énergie, Mines et Ressources Canada

LIST OF THERMOCOUPLE LOOPS - WITH PID TEMPERATURE CONTROLLERS

INSTRUMENT LOOP DIAGRAM COVER SHEET

EMR COPROCESSING PILOT PLANT PP3

DRAWN | CAD | DATE 86.07.03
CHKD | REV 02
DESIGN

Monenco Consultants Limited

WORK ORDER No. DSS 8279-3

REG. No. 204301

LOOP

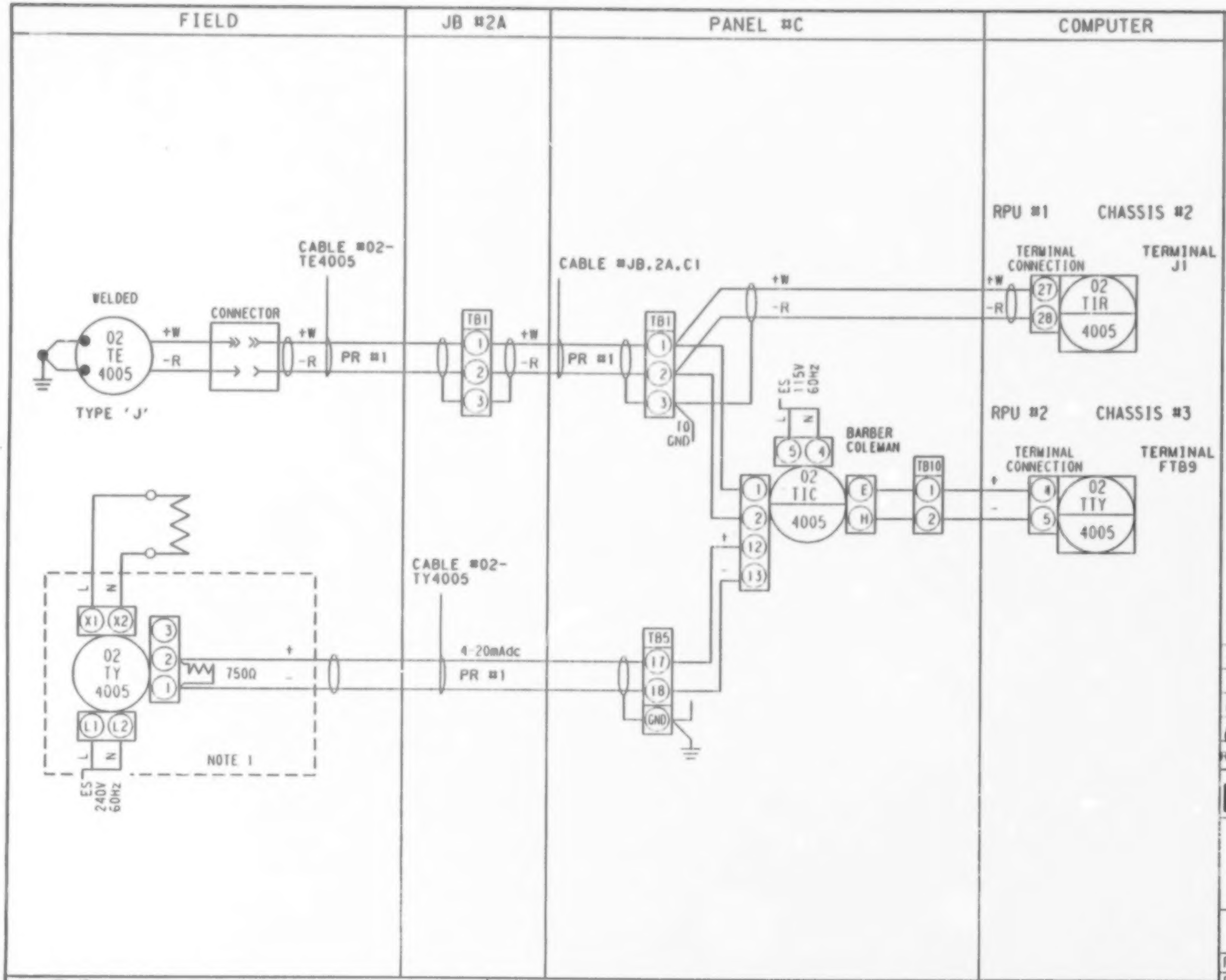

NOTES:
1. SCR's ARE MOUNTED IN SEPARATE PANEL, LOCATED IN THE OPERATING AISLE.

GENERAL NOTES:

A. 24 VAC Power Supply from GFC, Hammond Series Power Supply in panel.

B. 4-20mA signals to computer are shunted by EMR with a resistor to provide voltage signal to computer card.

C. Compatibility of voltage signals to computer programmed by EMR.

REV	DATE	DESCRIPTION	CHK	MEC APP	EMR APP
01	86.09	REV.1 FINAL	cP	[illegible]	
00	86.07.14	FOR EMR APPROVAL	RPW		✓

Energy, Mines and Resources Canada — Énergie, Mines et Ressources Canada

LOOP DIAGRAM
02-T-4005
AREA 2
FEED PREHEAT AND DUMP SYSTEM

EMR COPROCESSING PILOT PLANT
PP3

PID No. D-3-2 -MP-1
DRAWN CAD DATE 86.05.15
CHKD REV 01
DESIGN

Monenco Consultants Limited | WORK ORDER No. DSS 8279-3 | REG. No. 203940

LOOP3

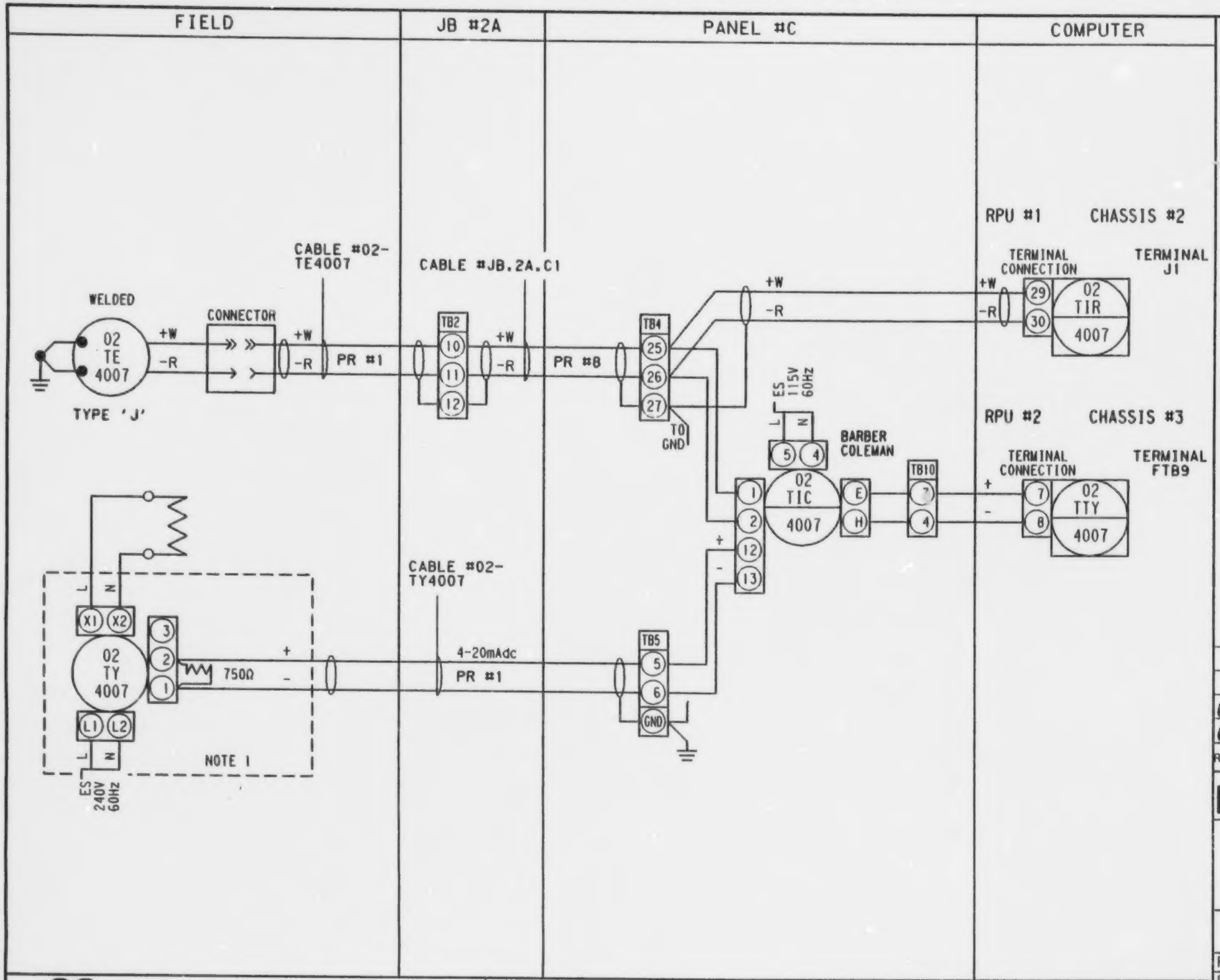

NOTES:
1. SCR's ARE MOUNTED IN SEPARATE PANEL, LOCATED IN THE OPERATING AISLE.

GENERAL NOTES:

A. 24 VAC Power Supply from GFC, Hammond Series Power Supply in panel.

B. 4-20mA signals to computer are shunted by EMR with a resistor to provide voltage signal to computer card.

C. Compatibility of voltage signals to computer programmed by EMR.

REV	DATE	DESCRIPTION	CHK	MEC APP	EMR APP
01	86.09	PH.1 FINAL	CP	[illegible]	
00	86.07.14	FOR EMR APPROVAL	RAW		✓

Energy, Mines and Resources Canada / Énergie, Mines et Ressources Canada

LOOP DIAGRAM
02-T-4007
2
FEED PREHEAT AND DUMP SYSTEM

EMR COPROCESSING PILOT PLANT
PP3

PID No.	D-3-2 -MP-1
DRAWN	CAD
DATE	86.06.12
CHKD	
DESIGN	
REV	01

Monenco Consultants Limited

WORK ORDER No. DSS 8279-3

REG. No. 203963

LOOP3

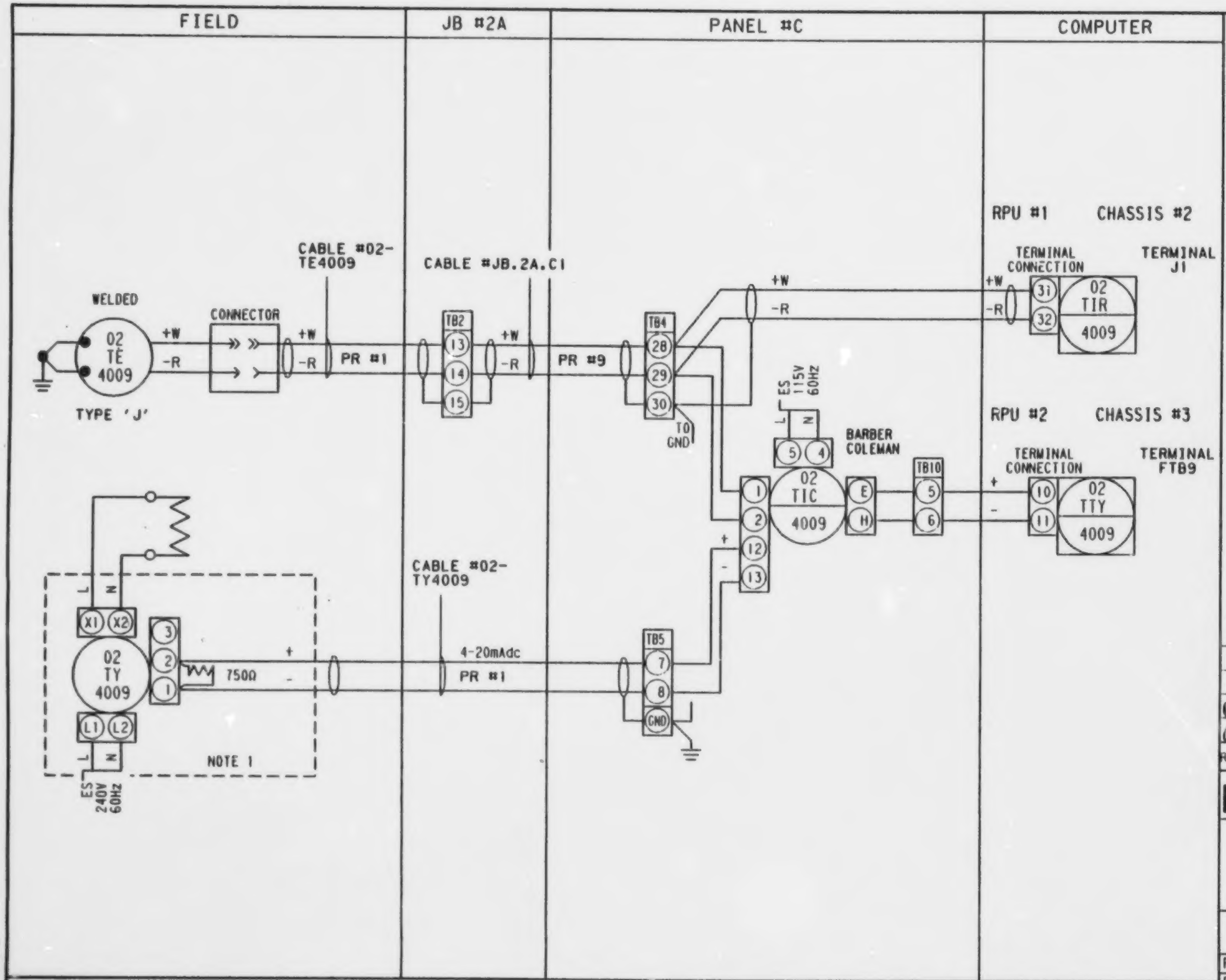

NOTES:

1. SCR's ARE MOUNTED IN SEPARATE PANEL, LOCATED IN THE OPERATING AISLE.

GENERAL NOTES:

A. 24 VAC Power Supply from GFC, Hammond Series Power Supply in panel.

B. 4-20mA signals to computer are shunted by EMR with a resistor to provide voltage signal to computer card.

C. Compatibility of voltage signals to computer programmed by EMR.

REV	DATE	DESCRIPTION	CHK	MEC APP	EMR APP
01	86.09	PH.1 FINAL			
00	86.07.14	FOR EMR APPROVAL			✓

Energy, Mines and Resources Canada / Énergie, Mines et Ressources Canada

LOOP DIAGRAM
02-T-4009
2
FEED PREHEAT AND DUMP SYSTEM

EMR COPROCESSING PILOT PLANT
PP3

PID No.	D-3-2 -MP-1		
DRAWN	CAD	DATE	86.06.12
CHKD			REV
DESIGN			01

Monenco Consultants Limited

WORK ORDER No. DSS 8279-3

REG. No. 203964

LOOP3

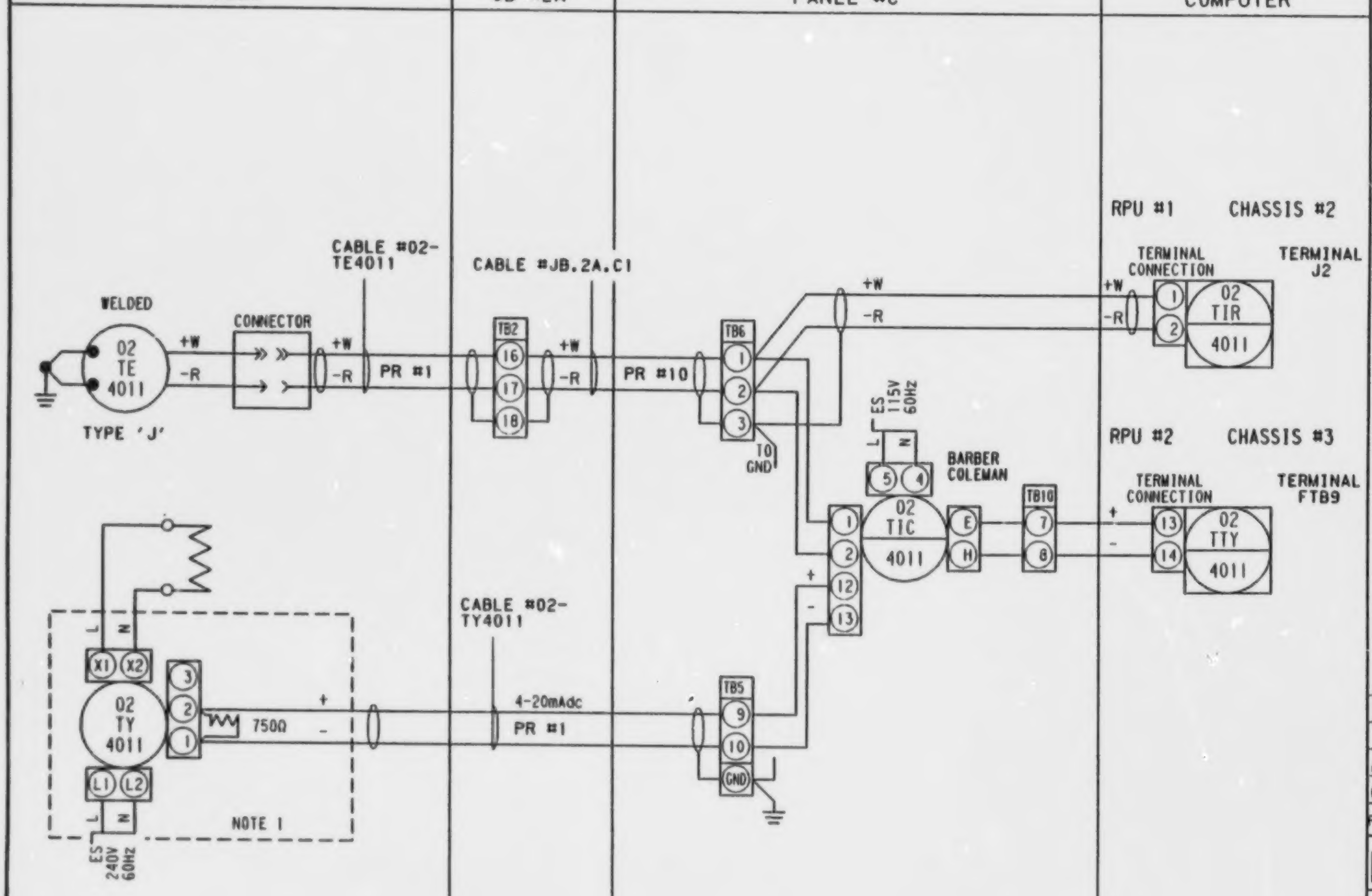

NOTES:
1. SCR's ARE MOUNTED IN SEPARATE PANEL, LOCATED IN THE OPERATING AISLE.

GENERAL NOTES:

A. 24 VAC Power Supply from GFC, Hammond Series Power Supply in panel.

B. 4-20mA signals to computer are shunted by EMR with a resistor to provide voltage signal to computer card.

C. Compatibility of voltage signals to computer programmed by EMR.

REV	DATE	DESCRIPTION	CHK	MEC APP	EMR APP
01	86.09	PH.1 FINAL	OP	MP	
00	86.07.14	FOR EMR APPROVAL	RAW		✓

Energy, Mines and Resources Canada — Énergie, Mines et Ressources Canada

LOOP DIAGRAM
02-T-4011
2
FEED PREHEAT AND DUMP SYSTEM

EMR COPROCESSING PILOT PLANT
PP3

PID No.	D-3-2 -MP-1		
DRAWN	CAD	DATE	86.06.12
CHKD			REV
DESIGN			01

Monenco Consultants Limited

WORK ORDER No. DSS 8279-3

REG. No. 203965

LOOP3

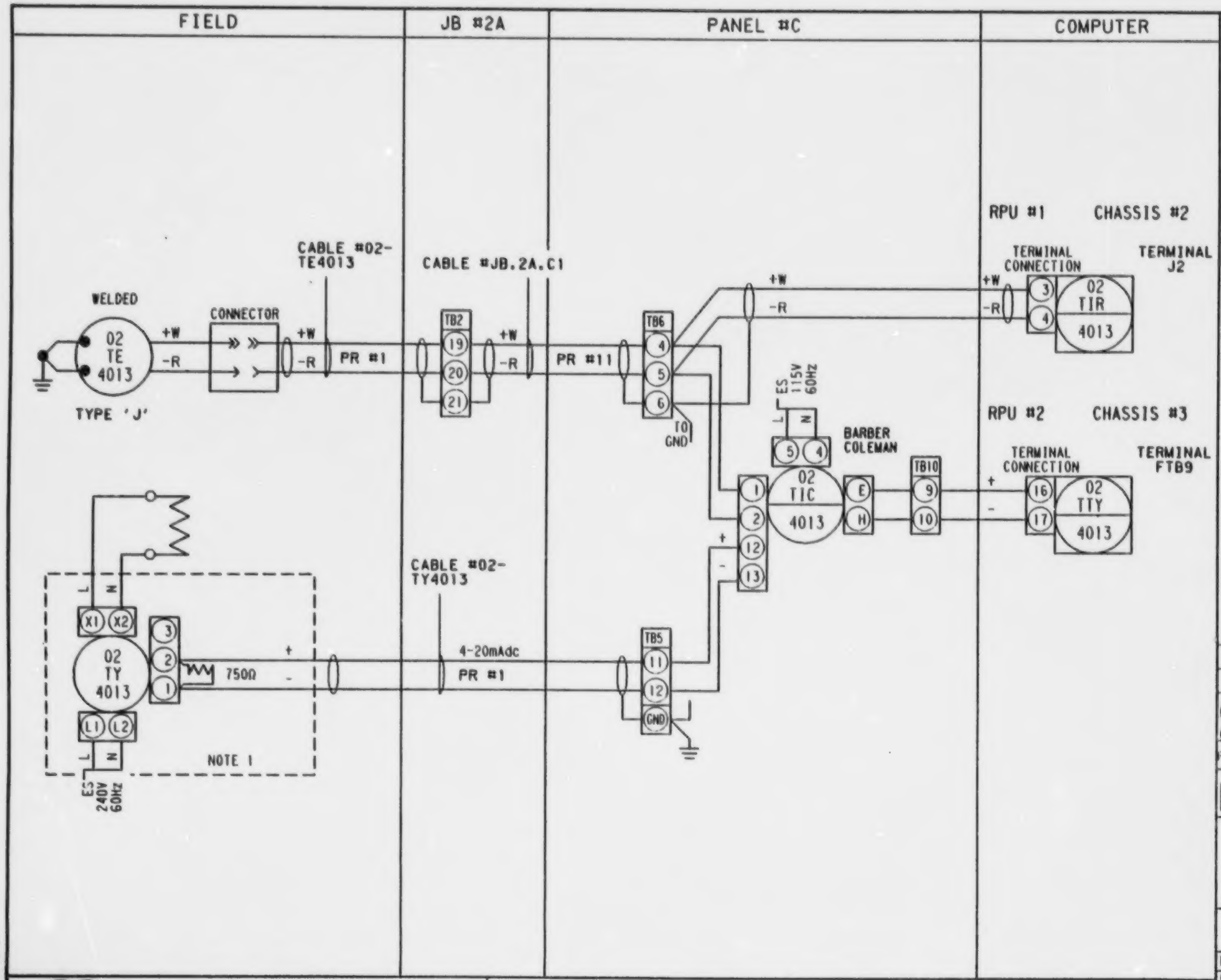

NOTES:
1. SCR's ARE MOUNTED IN SEPARATE PANEL, LOCATED IN THE OPERATING AISLE.

GENERAL NOTES:

A. 24 VAC Power Supply from GFC, Hammond Series Power Supply in panel.

B. 4-20mA signals to computer are shunted by EMR with a resistor to provide voltage signal to computer card.

C. Compatibility of voltage signals to computer programmed by EMR.

REV	DATE	DESCRIPTION	CHK	MEC APP	EMR APP
01	86.09	AU.1 FINAL	CP		
00	86.07.14	FOR EMR APPROVAL	RW		✓

Energy, Mines and Resources Canada / Énergie, Mines et Ressources Canada

LOOP DIAGRAM
02-T-4013
2
FEED PREHEAT AND DUMP SYSTEM

EMR COPROCESSING PILOT PLANT
PP3

PID No.	D-3-2 -MP-1		
DRAWN	CAD	DATE	86.06.12
CHKD			REV
DESIGN			01

Monenco Consultants Limited | WORK ORDER No. DSS 8279-3 | REG. No. 203966

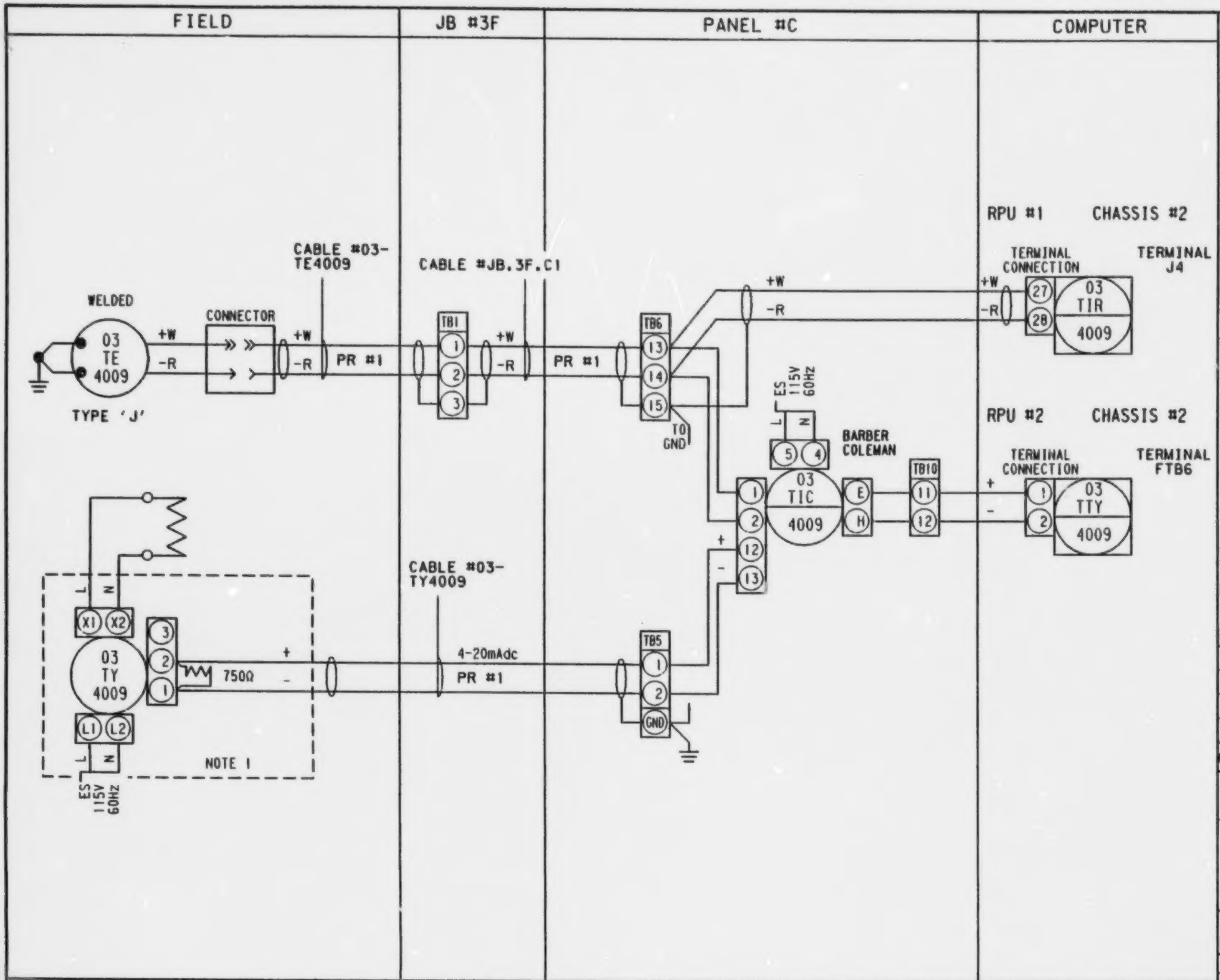

NOTES:
1. SCR's ARE MOUNTED IN SEPARATE PANEL, LOCATED IN THE OPERATING AISLE.

GENERAL NOTES:

A. 24 VAC Power Supply from GFC, Hammond Series Power Supply in panel.

B. 4-20mA signals to computer are shunted by EMR with a resistor to provide voltage signal to computer card.

C. Compatibility of voltage signals to computer programmed by EMR.

REV	DATE	DESCRIPTION	CHK	MEC APP	EMR APP
01	86.09	P11.1 FINAL	CP	[illegible]	
00	86.07.14	FOR EMR APPROVAL	RPW		✓

Energy, Mines and Resources Canada — Énergie, Mines et Ressources Canada

LOOP DIAGRAM
03-T-4009
AREA 3
REACTOR AND SAMPLING SYSTEM

EMR COPROCESSING PILOT PLANT
PP3

PID No.	D-3-3 -MP-1
DRAWN CAD	DATE 86.06.12
CHKD	REV 01
DESIGN	

Monenco Consultants Limited | WORK ORDER No. DSS 8279-3 | REG. No. 203969

LOOP3

B

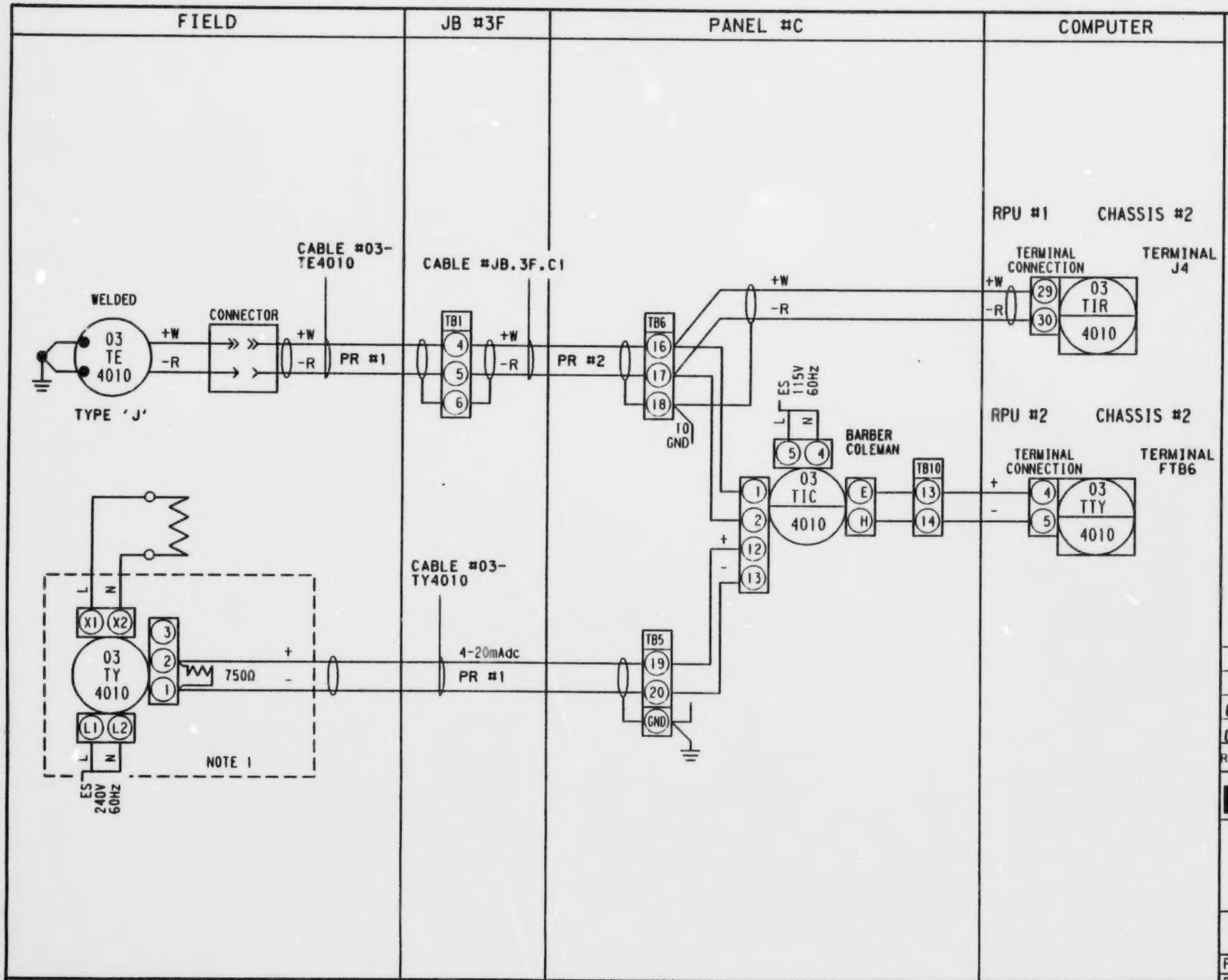

NOTES:

1. SCR's ARE MOUNTED IN SEPARATE PANEL, LOCATED IN THE OPERATING AISLE.

GENERAL NOTES:

A. 24 VAC Power Supply from GFC, Hammond Series Power Supply in panel.

B. 4-20mA signals to computer are shunted by EMR with a resistor to provide voltage signal to computer card.

C. Compatibility of voltage signals to computer programmed by EMR.

REV	DATE	DESCRIPTION	CHK	MEC APP	EMR APP
01	86.09	All 1 FINAL			
00	86.02.14	FOR EMR APPROVAL	RPW		✓

Energy, Mines and Resources Canada / Énergie, Mines et Ressources Canada

LOOP DIAGRAM
03-T-4010
AREA 3
REACTOR AND SAMPLING SYSTEM

EMR COPROCESSING PILOT PLANT
PP3

PID No.	D-3-3 -MP-1		
DRAWN	CAD	DATE	86.06.12
CHKD			REV
DESIGN			01

Monenco Consultants Limited

WORK ORDER No. DSS 8279-3

REG. No. 203970

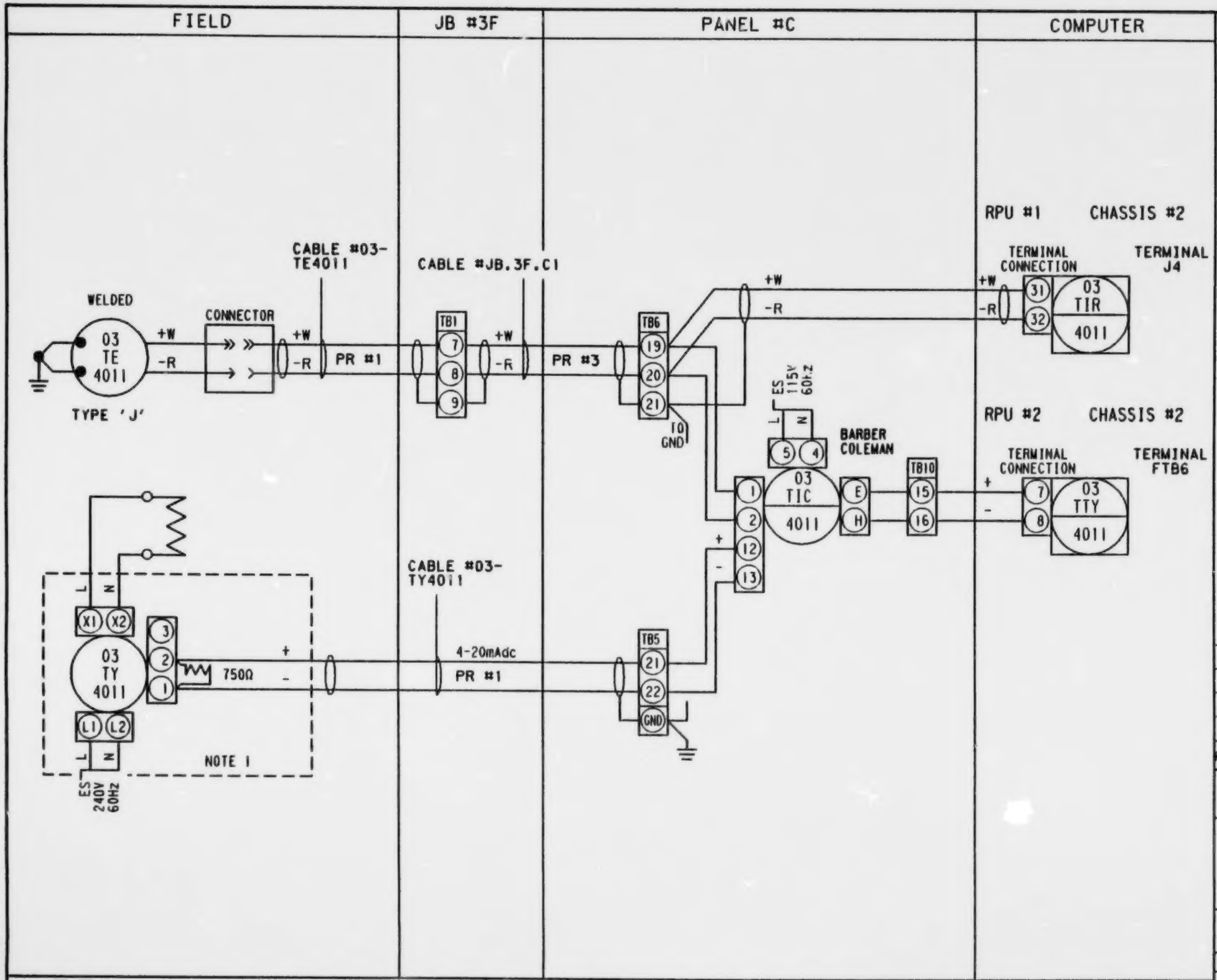

NOTES:
1. SCR's ARE MOUNTED IN SEPARATE PANEL, LOCATED IN THE OPERATING AISLE.

GENERAL NOTES:

A. 24 VAC Power Supply from GFC, Hammond Series Power Supply in panel.

B. 4-20mA signals to computer are shunted by EMR with a resistor to provide voltage signal to computer card.

C. Compatibility of voltage signals to computer programmed by EMR.

REV	DATE	DESCRIPTION	CHK	MEC APP	EMR APP
01	86.09	PH.1 FINAL	CP	[illegible]	
00	86.07.14	FOR EMR APPROVAL	RAV		✓

Energy, Mines and Resources Canada — Énergie, Mines et Ressources Canada

LOOP DIAGRAM
03-T-4011
AREA 3
REACTOR AND SAMPLING SYSTEM

EMR COPROCESSING PILOT PLANT
PP3

PID No.	D-3-3 -MP-1	
DRAWN	CAD	DATE 86.06.12
CHKD		REV
DESIGN		01

Monenco Consultants Limited

WORK ORDER No. DSS 8279-3

REG. No. 203971

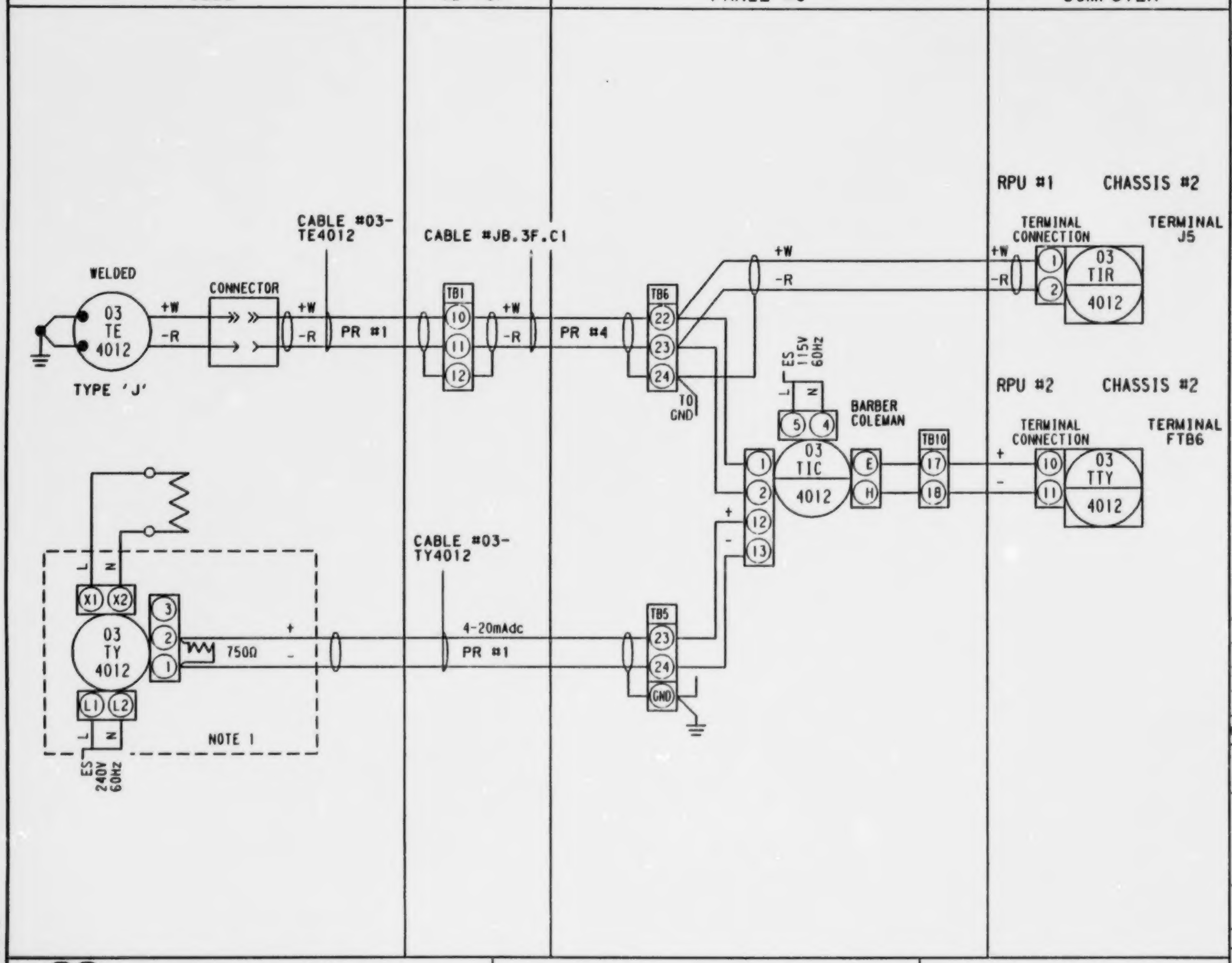

NOTES:

1. SCR's ARE MOUNTED IN SEPARATE PANEL, LOCATED IN THE OPERATING AISLE.

GENERAL NOTES:

A. 24 VAC Power Supply from GFC, Hammond Series Power Supply in panel.

B. 4-20mA signals to computer are shunted by EMR with a resistor to provide voltage signal to computer card.

C. Compatibility of voltage signals to computer programmed by EMR.

REV	DATE	DESCRIPTION	CHK	MEC APP	EMR APP
01	86.09	PH.4 FINAL	GP	WRP	
0	86.07.14	FOR EMR APPROVAL	RPW		✓

Energy, Mines and Resources Canada — Énergie, Mines et Ressources Canada

LOOP DIAGRAM
03-T-4012
AREA 3
REACTOR AND SAMPLING SYSTEM

EMR COPROCESSING PILOT PLANT
PP3

PID No. D-3-3 -MP-1
DRAWN CAD DATE 86.06.12
CHKD
DESIGN
REV 01

Monenco Consultants Limited

WORK ORDER No. DSS 8279-3

REG. No. 203972

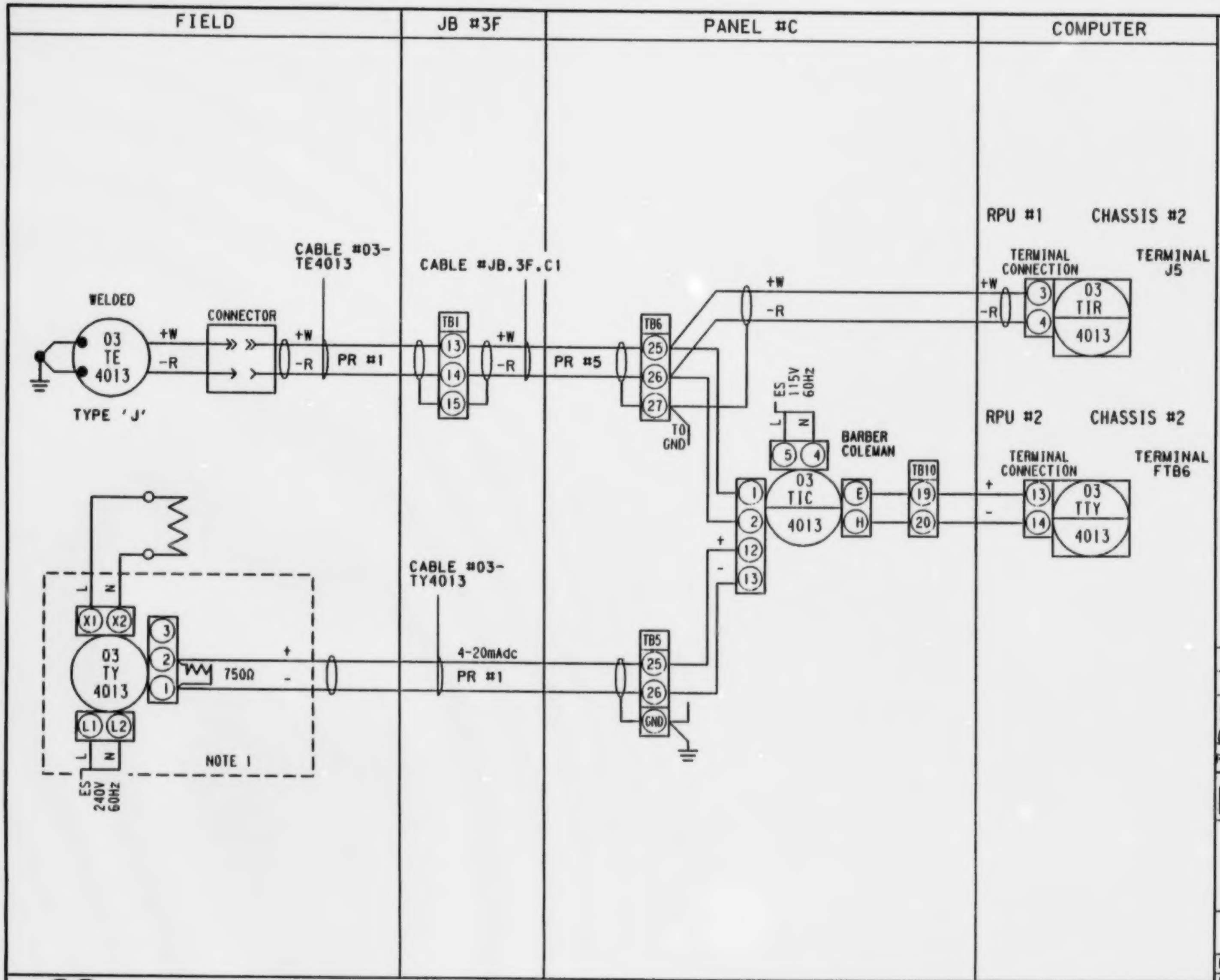

NOTES:
1. SCR's ARE MOUNTED IN SEPARATE PANEL, LOCATED IN THE OPERATING AISLE.

GENERAL NOTES:

A. 24 VAC Power Supply from GFC, Hammond Series Power Supply in panel.

B. 4-20mA signals to computer are shunted by EMR with a resistor to provide voltage signal to computer card.

C. Compatibility of voltage signals to computer programmed by EMR.

REV	DATE	DESCRIPTION	CHK	MEC APP	EMR APP
01	86.09	AH.1 FINAL			
00	86.02.14	FOR EMR APPROVAL	PAW		✓

Energy, Mines and Resources Canada — Énergie, Mines et Ressources Canada

LOOP DIAGRAM
03-T-4013
AREA 3
REACTOR AND SAMPLING SYSTEM

EMR COPROCESSING PILOT PLANT
PP3

PID No.	D-3-3 -MP-1		
DRAWN	CAD	DATE	86.06.12
CHKD		REV	01
DESIGN			

Monenco Consultants Limited | WORK ORDER No. DSS 8279-3 | REG. No. 203973

LOOP3

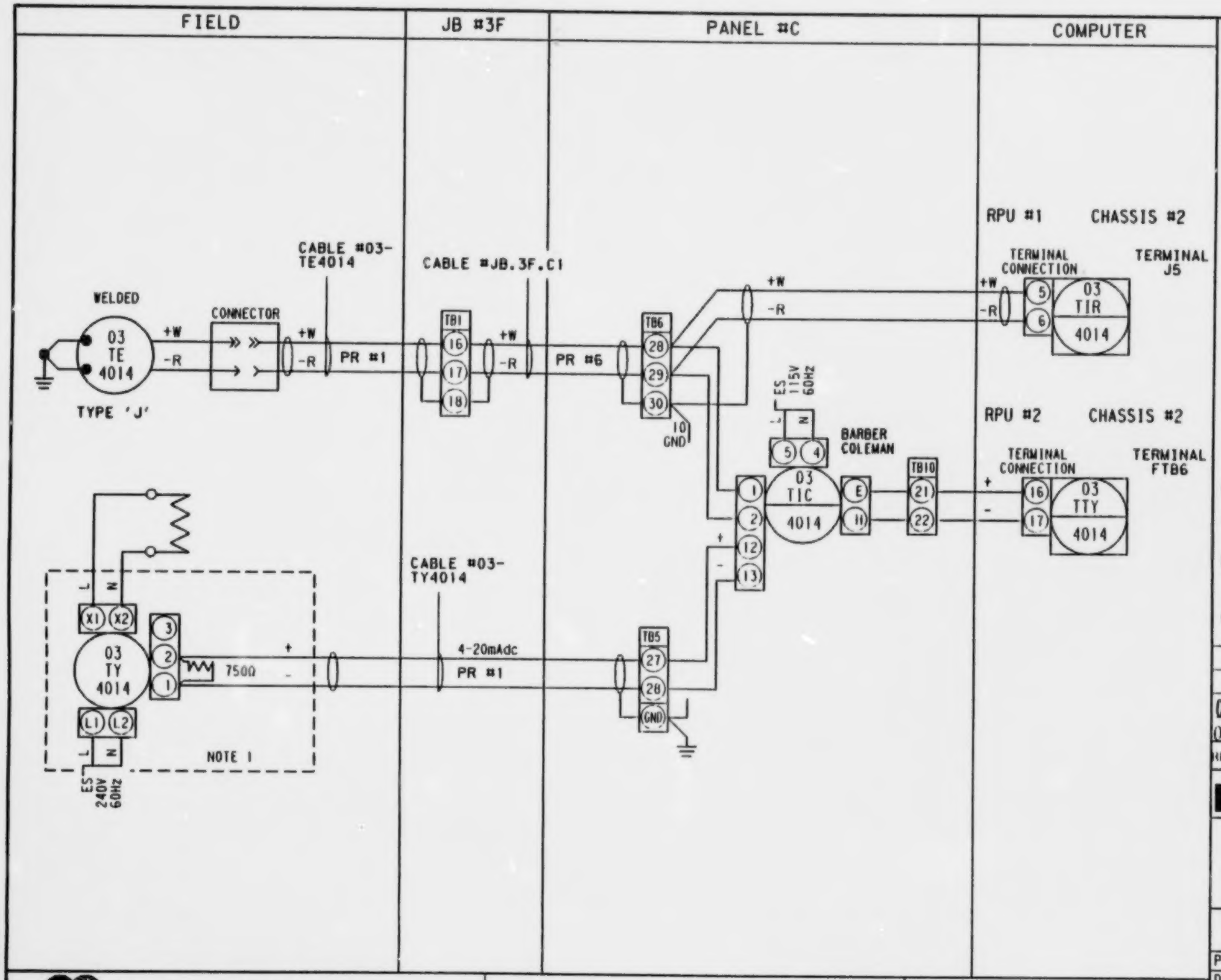

NOTES:

1. SCR's ARE MOUNTED IN SEPARATE PANEL, LOCATED IN THE OPERATING AISLE.

GENERAL NOTES:

A. 24 VAC Power Supply from GFC, Hammond Series Power Supply in panel.

B. 4-20mA signals to computer are shunted by EMR with a resistor to provide voltage signal to computer card.

C. Compatibility of voltage signals to computer programmed by EMR.

REV	DATE	DESCRIPTION	CHK	MEC APP	EMR APP
01	86.09	PH.1 FINAL			
(0)	86.07.14	FOR EMR APPROVAL	RPW		✓

Energy, Mines and Resources Canada — Énergie, Mines et Ressources Canada

LOOP DIAGRAM
03-T-4014

AREA 3
REACTOR AND SAMPLING SYSTEM

EMR COPROCESSING PILOT PLANT
PP3

PID No.	D-3-3 -MP-1		
DRAWN	CAD	DATE	86.06.12
CHKD			REV
DESIGN			01

Monenco Consultants Limited

WORK ORDER No. DSS 8279-3

REG. No. 203974

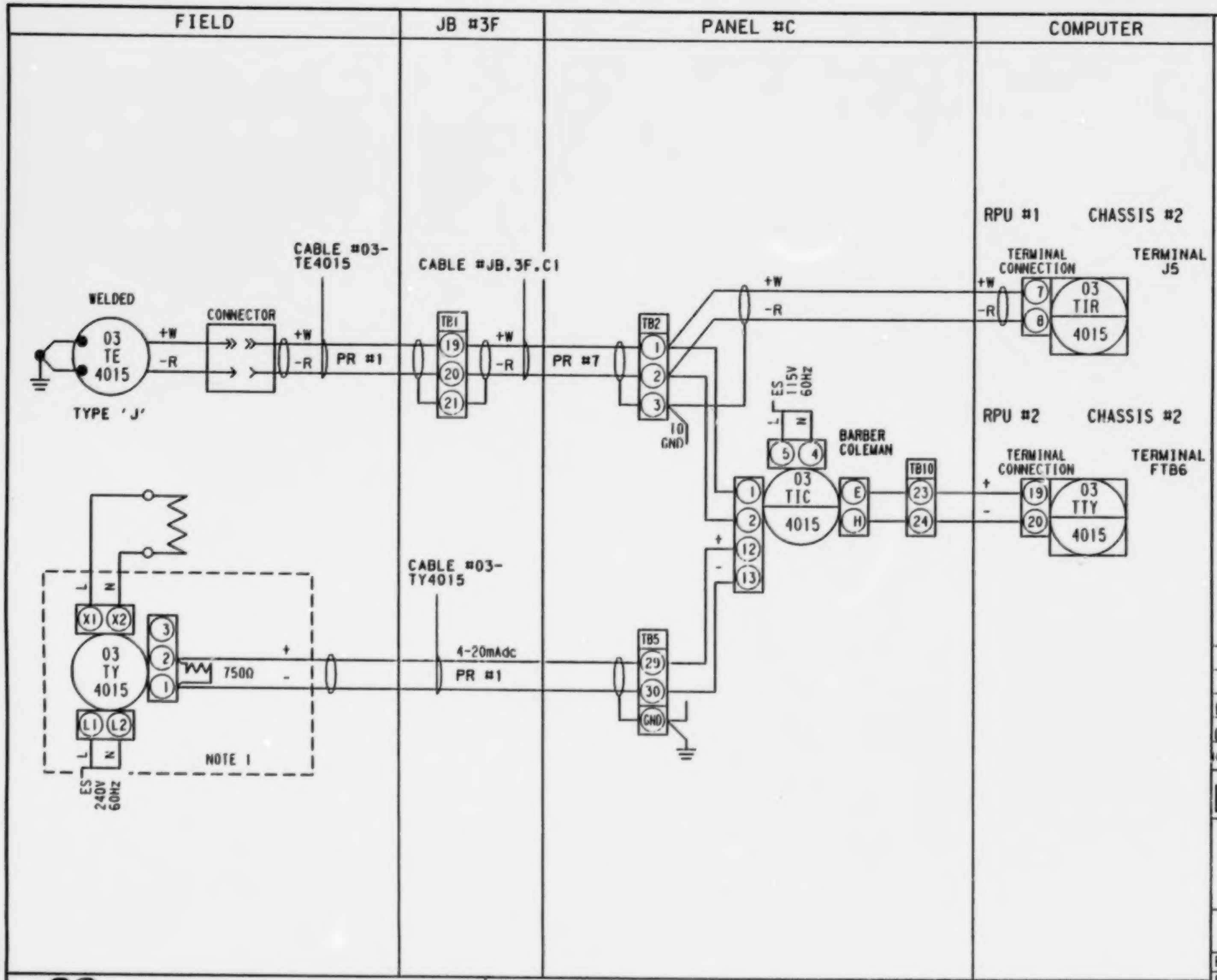

NOTES:
1. SCR's ARE MOUNTED IN SEPARATE PANEL, LOCATED IN THE OPERATING AISLE.

GENERAL NOTES:

A. 24 VAC Power Supply from GFC, Hammond Series Power Supply in panel.

B. 4-20mA signals to computer are shunted by EMR with a resistor to provide voltage signal to computer card.

C. Compatibility of voltage signals to computer programmed by EMR.

REV	DATE	DESCRIPTION	CHK	MEC APP	EMR APP
01	86.09	PH.1 FINAL	[illegible]	[illegible]	
00	86.07.14	FOR EMR APPROVAL	PPW		✓

Energy, Mines and Resources Canada / Énergie, Mines et Ressources Canada

LOOP DIAGRAM
03-T-4015
AREA 3
REACTOR AND SAMPLING SYSTEM

EMR COPROCESSING PILOT PLANT
PP3

PID No.	D-3-3 -MP-1		
DRAWN	CAD	DATE	86.06.12
CHKD			REV
DESIGN			01

Monenco Consultants Limited

WORK ORDER No. DSS 8279-3

REG. No. 203975

LOOP3

B

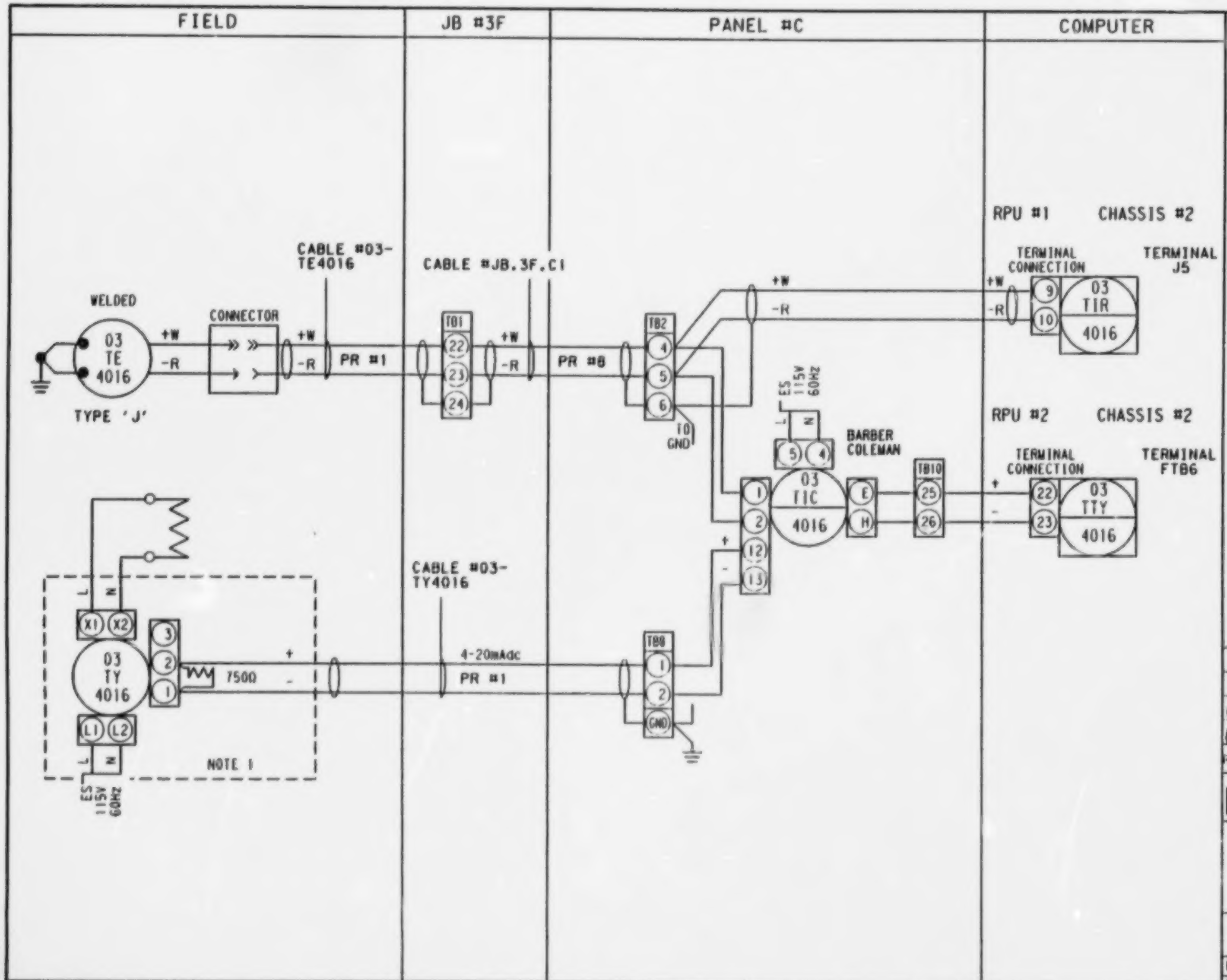

NOTES:
1. SCR's ARE MOUNTED IN SEPARATE PANEL, LOCATED IN THE OPERATING AISLE.

GENERAL NOTES:

A. 24 VAC Power Supply from GFC, Hammond Series Power Supply in panel.

B. 4-20mA signals to computer are shunted by EMR with a resistor to provide voltage signal to computer card.

C. Compatibility of voltage signals to computer programmed by EMR.

REV	DATE	DESCRIPTION	CHK	MEC APP	EMR APP
01	86.09	AS.1 FINAL			
00	86.07.14	FOR EMR APPROVAL			✓

Energy, Mines and Resources Canada — Énergie, Mines et Ressources Canada

LOOP DIAGRAM
03-T-4016
AREA 3
REACTOR AND SAMPLING SYSTEM

EMR COPROCESSING PILOT PLANT
PP3

PID No.	D-3-3 -MP-1	
DRAWN	CAD	DATE 86.06.12
CHKD		REV 01
DESIGN		

Monenco Consultants Limited | WORK ORDER No. DSS 8279-3 | REG. No. 203976

LOOP3

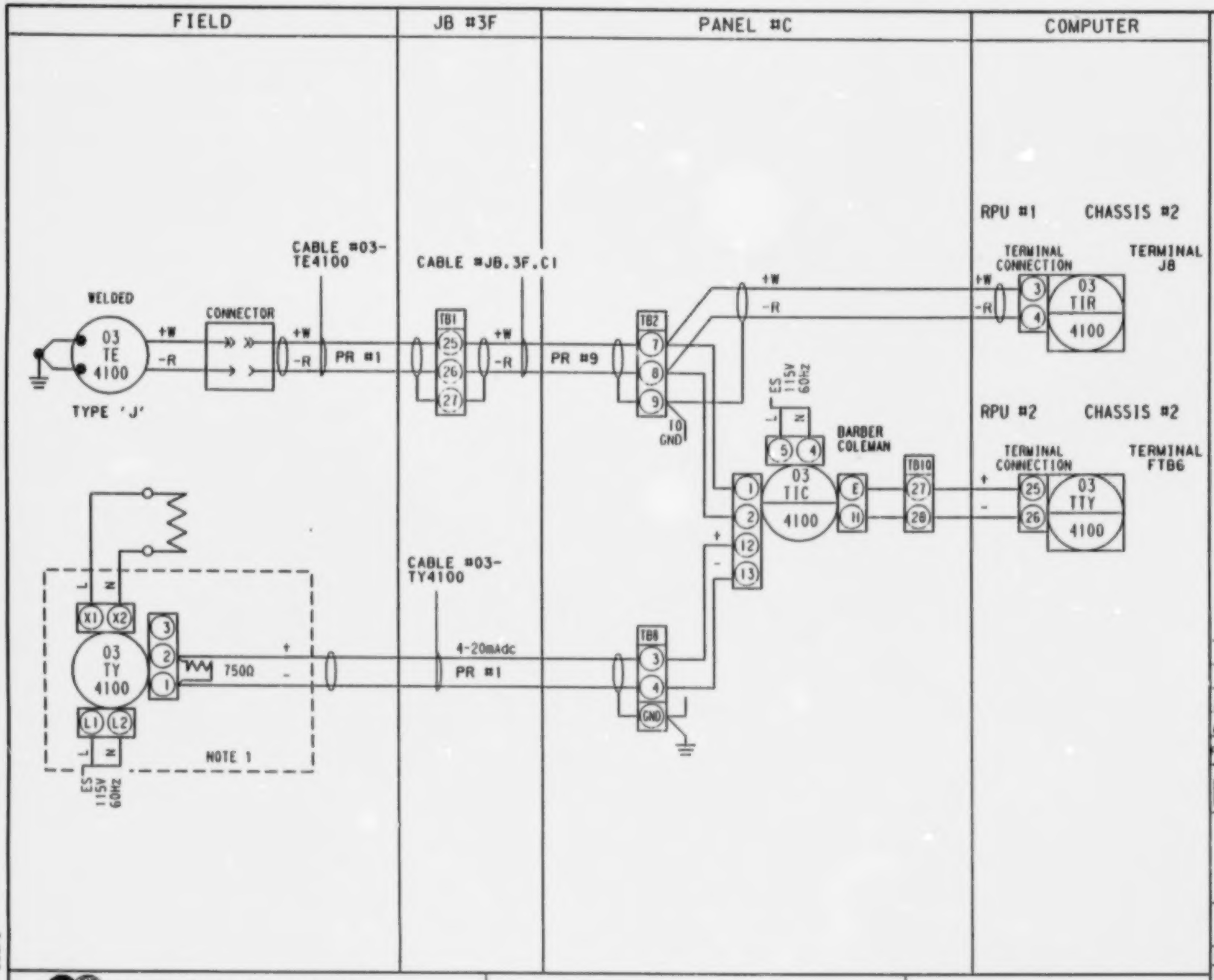

NOTES:
1. SCR's ARE MOUNTED IN SEPARATE PANEL, LOCATED IN THE OPERATING AISLE.

GENERAL NOTES:

A. 24 VAC Power Supply from GFC, Hammond Series Power Supply in panel.

B. 4-20mA signals to computer are shunted by EMR with a resistor to provide voltage signal to computer card.

C. Compatibility of voltage signals to computer programmed by EMR.

REV	DATE	DESCRIPTION	CHK	MEC APP	EMR APP
01	86.09	ALL FINAL			
00	86.07.14	FOR EMR APPROVAL	RW		✓

Energy, Mines and Resources Canada — Énergie, Mines et Ressources Canada

LOOP DIAGRAM
03-T-4100
AREA 3
REACTOR AND SAMPLING SYSTEM

EMR COPROCESSING PILOT PLANT PP3

PID No. D-3-3 -MP-2
DRAWN CAD DATE 86.06.12
CHKD
DESIGN
REV 01

Monenco Consultants Limited

WORK ORDER No. DSS 8279-3

REG. No. 203977

LOOP3

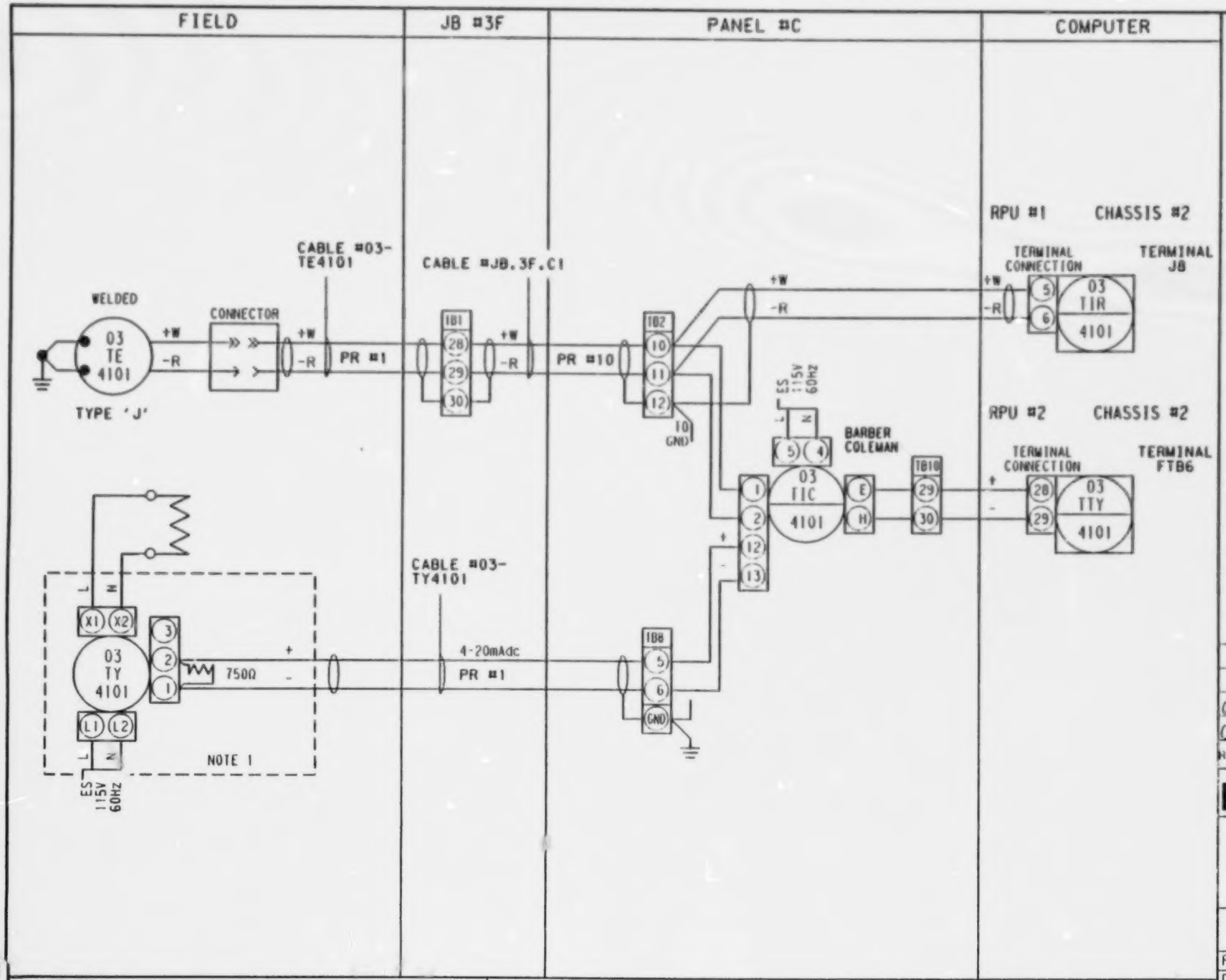

NOTES:
1. SCR's ARE MOUNTED IN SEPARATE PANEL, LOCATED IN THE OPERATING AISLE.

GENERAL NOTES:

A. 24 VAC Power Supply from GFC, Hammond Series Power Supply in panel.

B. 4-20mA signals to computer are shunted by EMR with a resistor to provide voltage signal to computer card.

C. Compatibility of voltage signals to computer programmed by EMR.

REV	DATE	DESCRIPTION	CHK	MEC APP	EMR APP
01	86.09	PAL FINAL	CP	MAP	
00	86.07.14	FOR EMR APPROVAL	RPW		✓

Energy, Mines and Resources Canada / Énergie, Mines et Ressources Canada

LOOP DIAGRAM
03-T-4101
AREA 3
REACTOR AND SAMPLING SYSTEM

EMR COPROCESSING PILOT PLANT
PP3

PID No.		D-3-3 -MP-2	
DRAWN	CAD	DATE	86.06.12
CHKD			REV
DESIGN			01

Monenco Consultants Limited | WORK ORDER No. DSS 8279-3 | REG. No. 203978

LOOP3

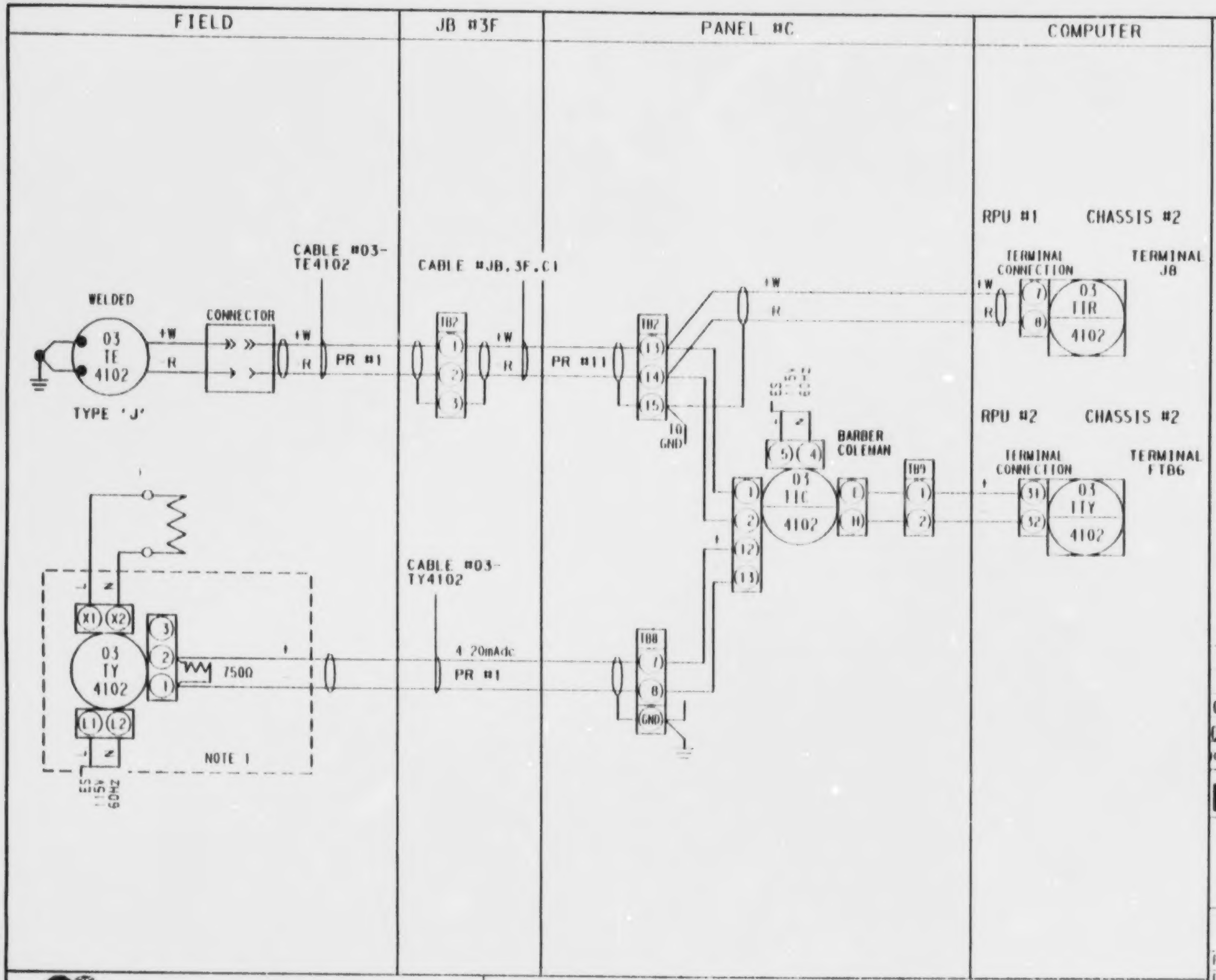

NOTES:

1. SCR'S ARE MOUNTED IN SEPARATE PANEL, LOCATED IN THE OPERATING AISLE.

GENERAL NOTES:

A. 24 VAC Power Supply from GFC, Hammond Series Power Supply in panel.

B. 4 20mA signals to computer are shunted by EMR with a resistor to provide voltage signal to computer card.

C. Compatibility of voltage signals to computer programmed by EMR.

REV	DATE	DESCRIPTION	CHK	MEC APP	EMR APP
01	86.09	AI.I FINAL	CP	WP	
00	86.01A	FOR EMR APPROVAL	PPV		✓

Energy, Mines and Resources Canada — Énergie, Mines et Ressources Canada

LOOP DIAGRAM
03-T-4102
AREA 3
REACTOR AND SAMPLING SYSTEM

EMR COPROCESSING PILOT PLANT
PP3

PID No.	D-3-3 -MP-2		
DRAWN	CAD	DATE	86.06.12
CHKD			REV
DESIGN			01

Monenco Consultants Limited

WORK ORDER No. DSS 8279-3

REG. No. 203979

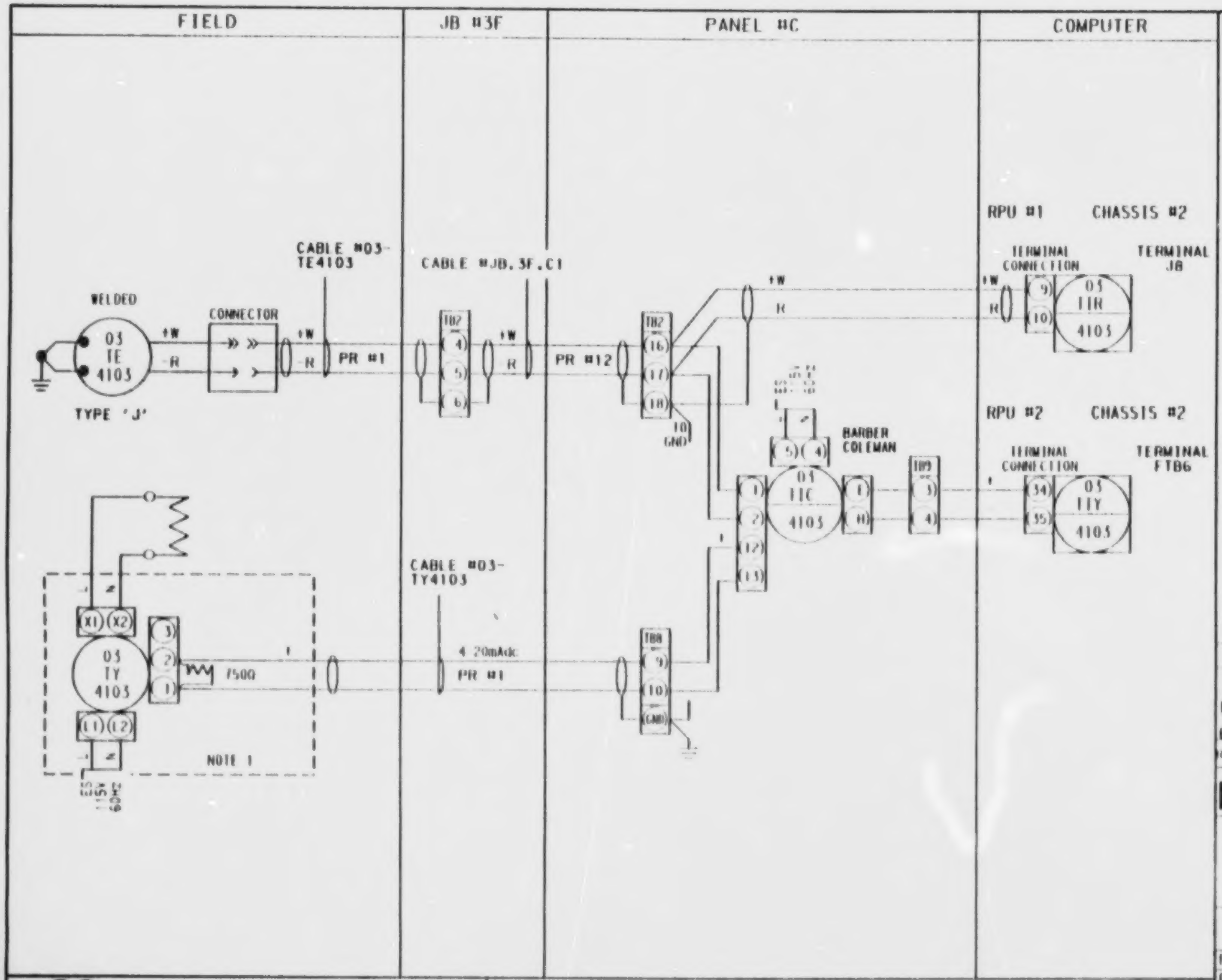

NOTES:

1. SCR's ARE MOUNTED IN SEPARATE PANEL, LOCATED IN THE OPERATING AISLE.

GENERAL NOTES:

A. 24 VAC Power Supply from GFC, Hammond Series Power Supply in panel.

B. 4-20mA signals to computer are shunted by EMR with a resistor to provide voltage signal to computer card.

C. Compatibility of voltage signals to computer programmed by EMR.

REV	DATE	DESCRIPTION	CHK	MEC APP	EMR APP
01	86.09	AS FINAL			
00	86.07.14	FOR EMR APPROVAL			✓

Energy, Mines and Resources Canada — Énergie, Mines et Ressources Canada

LOOP DIAGRAM
03-T-4103

AREA 3
REACTOR AND SAMPLING SYSTEM

EMR COPROCESSING PILOT PLANT
PP3

PID No.		D-3-3 -MP-2	
DRAWN	CAD	DATE	86.06.12
CHKD			REV
DESIGN			01

Monenco Consultants Limited

WORK ORDER No. DSS 8279-3

REG. No. 203980

LOOP3

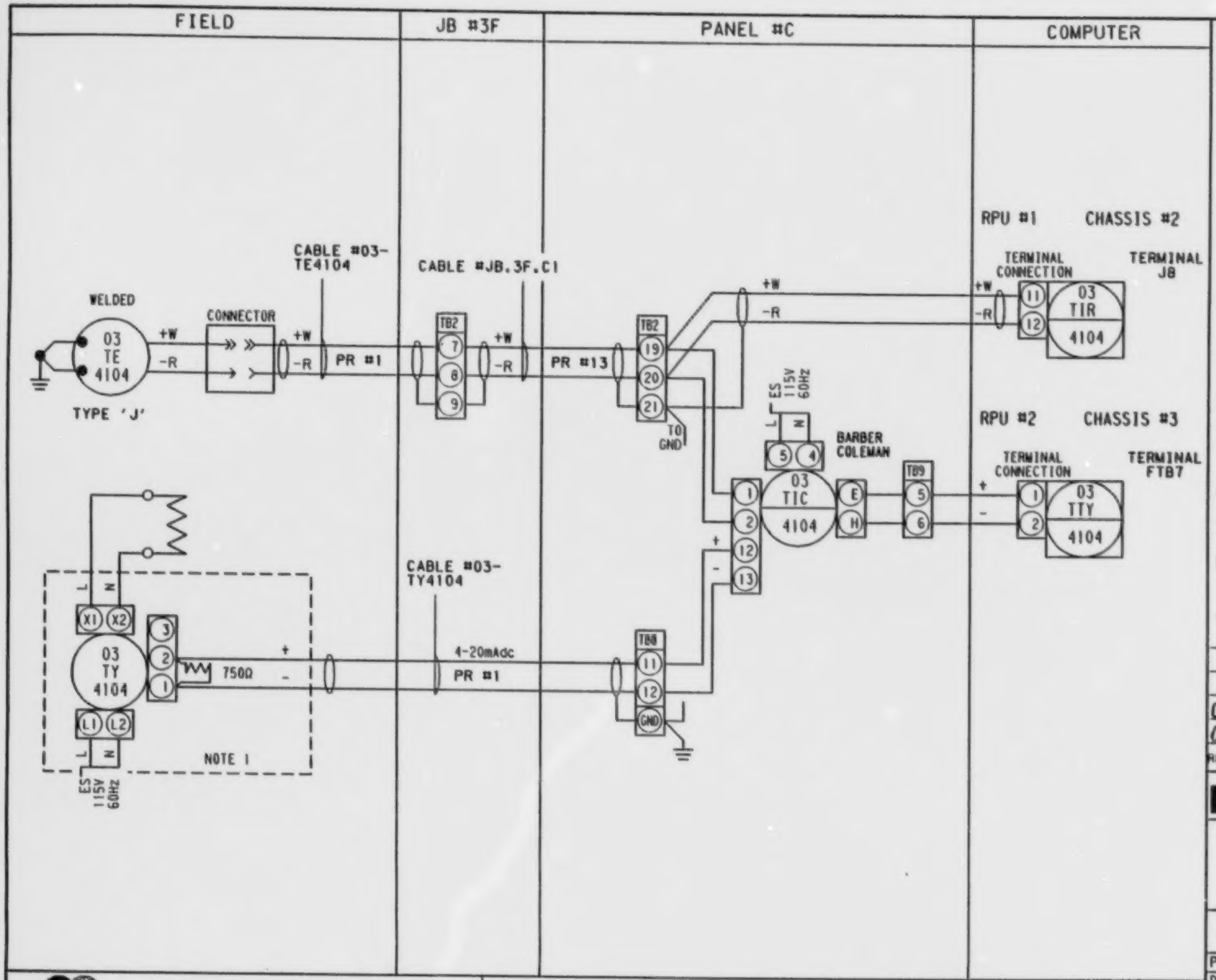

NOTES:
1. SCR's ARE MOUNTED IN SEPARATE PANEL, LOCATED IN THE OPERATING AISLE.

GENERAL NOTES:

A. 24 VAC Power Supply from GFC, Hammond Series Power Supply in panel.

B. 4-20mA signals to computer are shunted by EMR with a resistor to provide voltage signal to computer card.

C. Compatibility of voltage signals to computer programmed by EMR.

REV	DATE	DESCRIPTION	CHK	MEC APP	EMR APP
01	86.09	PH.1 FINAL	CP	GMP	
0	86.07.14	FOR EMR APPROVAL	R/W		✓

Energy, Mines and Resources Canada / Énergie, Mines et Ressources Canada

LOOP DIAGRAM
03-T-4104
AREA 3
REACTOR AND SAMPLING SYSTEM

EMR COPROCESSING PILOT PLANT
PP3

PID No.	D-3-3 -MP-2		
DRAWN	CAD	DATE	86.06.12
CHKD		REV	01
DESIGN			

Monenco Consultants Limited | WORK ORDER No. DSS 8279-3 | REG. No. 203981

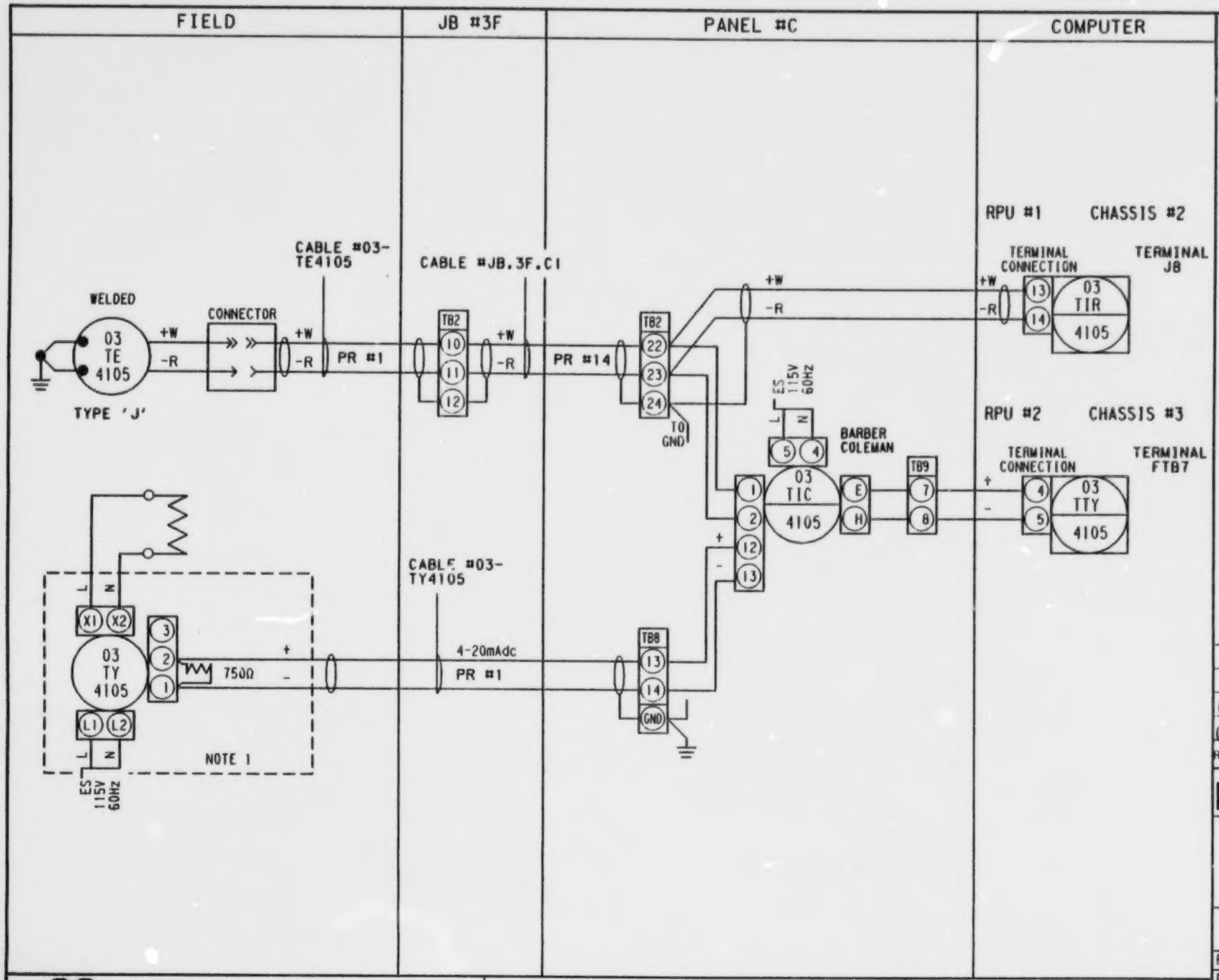

NOTES:
1. SCR's ARE MOUNTED IN SEPARATE PANEL, LOCATED IN THE OPERATING AISLE.

GENERAL NOTES:

A. 24 VAC Power Supply from GFC, Hammond Series Power Supply in panel.

B. 4-20mA signals to computer are shunted by EMR with a resistor to provide voltage signal to computer card.

C. Compatibility of voltage signals to computer programmed by EMR.

REV	DATE	DESCRIPTION	CHK	MEC APP	EMR APP
01	86.09	PH.1 FINAL	cP	WAF	
00	86.07.16	FOR EMR APPROVAL	BV		✓

Energy, Mines and Resources Canada — Énergie, Mines et Ressources Canada

LOOP DIAGRAM
03-T-4105
AREA 3
REACTOR AND SAMPLING SYSTEM

EMR COPROCESSING PILOT PLANT PP3

PID No. D-3-3 -MP-2
DRAWN | CAD | DATE 86.06.12
CHKD | REV 01
DESIGN

Monenco Consultants Limited

WORK ORDER No. DSS 8279-3

REG. No. 203982

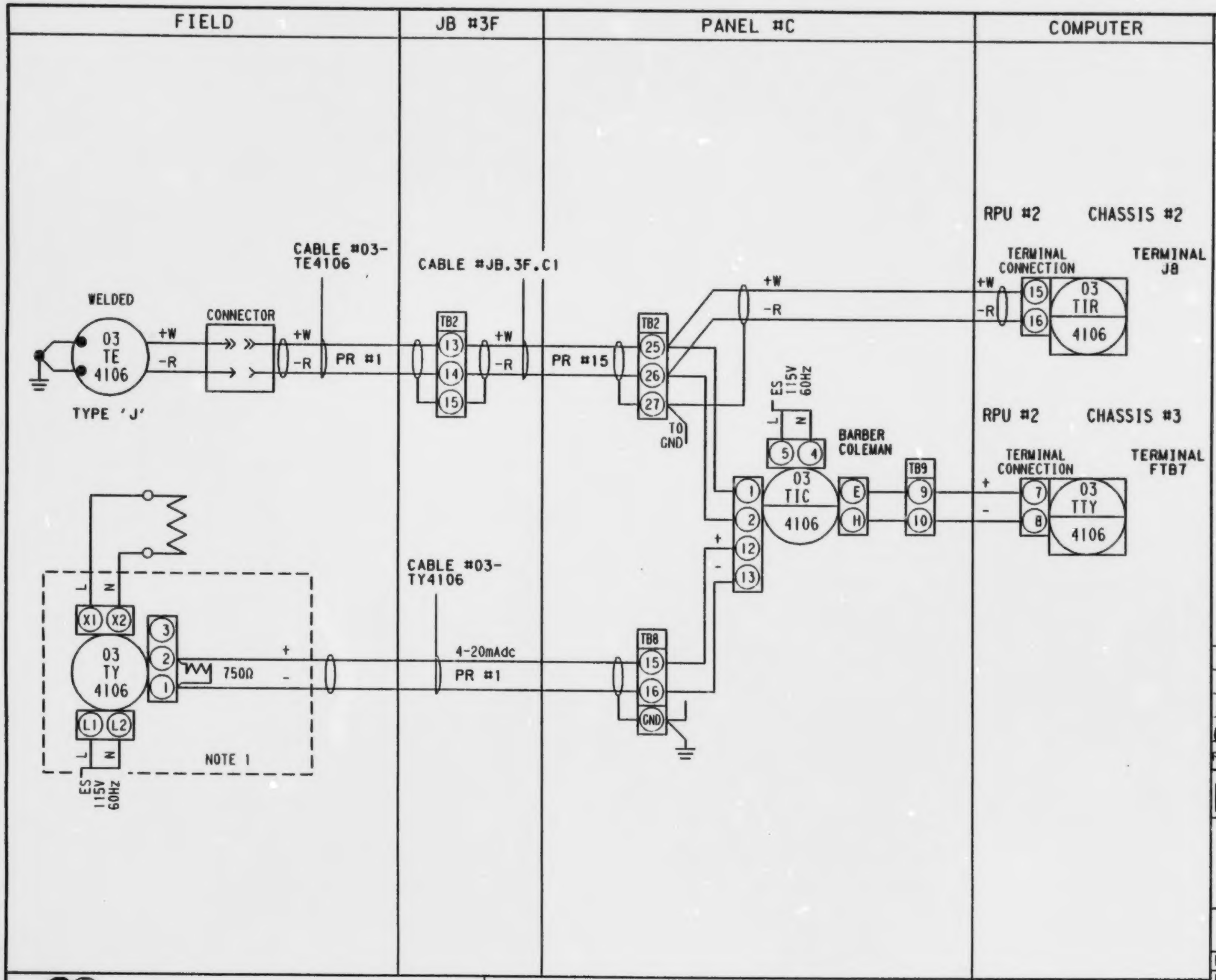

NOTES:
1. SCR's ARE MOUNTED IN SEPARATE PANEL, LOCATED IN THE OPERATING AISLE.

GENERAL NOTES:

A. 24 VAC Power Supply from GFC, Hammond Series Power Supply in panel.

B. 4-20mA signals to computer are shunted by EMR with a resistor to provide voltage signal to computer card.

C. Compatibility of voltage signals to computer programmed by EMR.

REV	DATE	DESCRIPTION	CHK	MEC APP	EMR APP
01	86.09	Pkl. FINAL	CP	[illegible]	
00	86.07.14	FOR EMR APPROVAL	RAV		✓

Energy, Mines and Resources Canada — Énergie, Mines et Ressources Canada

LOOP DIAGRAM
03-T-4106
AREA 3
REACTOR AND SAMPLING SYSTEM

EMR COPROCESSING PILOT PLANT
PP3

PID No.	D-3-3 -MP-2		
DRAWN	CAD	DATE	86.06.12
CHKD		REV	01
DESIGN			

Monenco Consultants Limited

WORK ORDER No. DSS 8279-3

REG. No. 203983

LOOP3

B

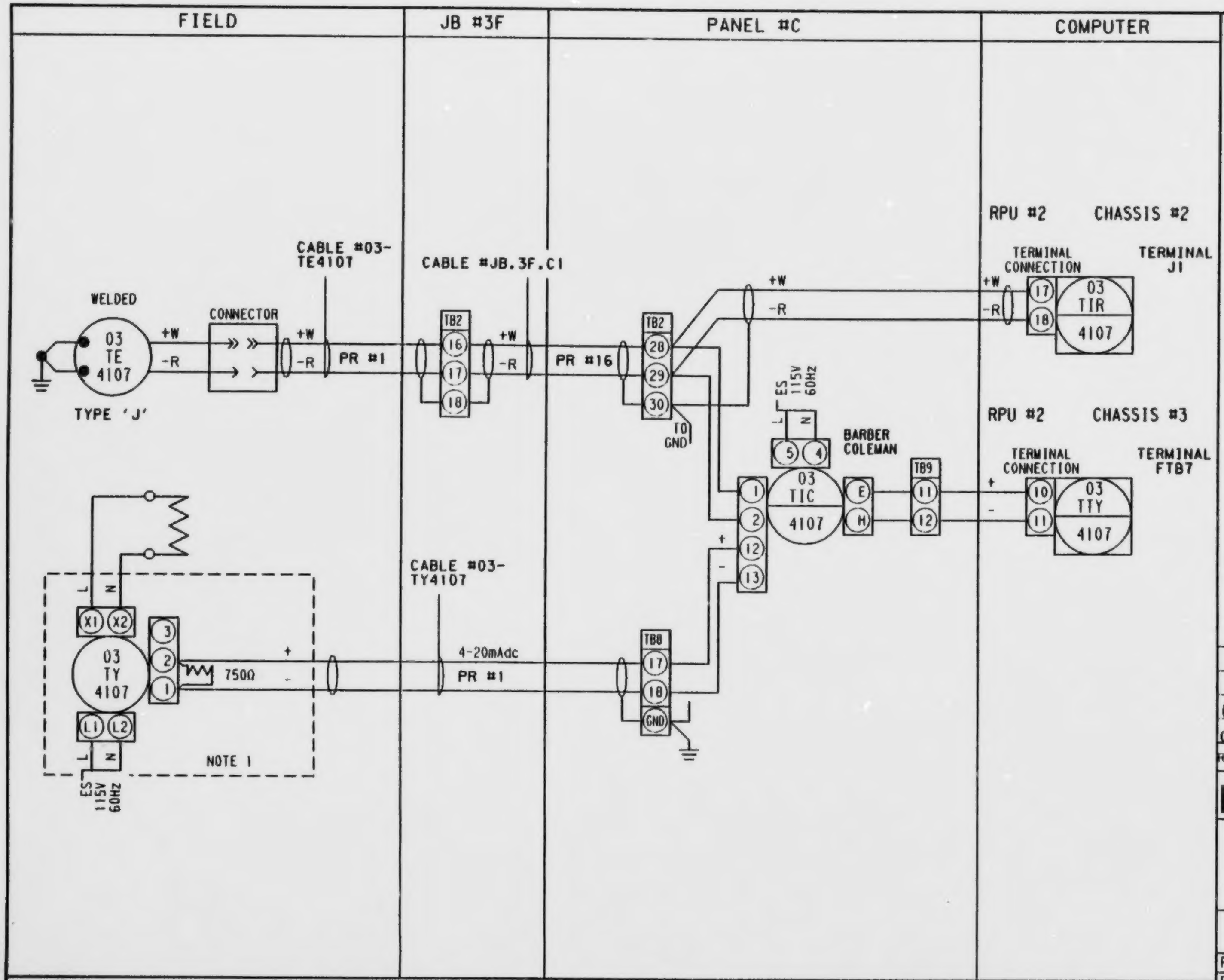

NOTES:

1. SCR's ARE MOUNTED IN SEPARATE PANEL, LOCATED IN THE OPERATING AISLE.

GENERAL NOTES:

A. 24 VAC Power Supply from GFC, Hammond Series Power Supply in panel.

B. 4-20mA signals to computer are shunted by EMR with a resistor to provide voltage signal to computer card.

C. Compatibility of voltage signals to computer programmed by EMR.

REV	DATE	DESCRIPTION	CHK	MEC APP	EMR APP
01	86.09	PH.1 FINAL	CP	MP	
00	86.07.14	FOR EMR APPROVAL	PW		✓

Energy, Mines and Resources Canada — Énergie, Mines et Ressources Canada

LOOP DIAGRAM
03-T-4107
AREA 3
REACTOR AND SAMPLING SYSTEM

EMR COPROCESSING PILOT PLANT
PP3

PID No.		D-3-3 -MP-2	
DRAWN	CAD	DATE	86.06.12
CHKD			REV
DESIGN			01

Monenco Consultants Limited

WORK ORDER No. DSS 8279-3

REG. No. 203984

LOOP3

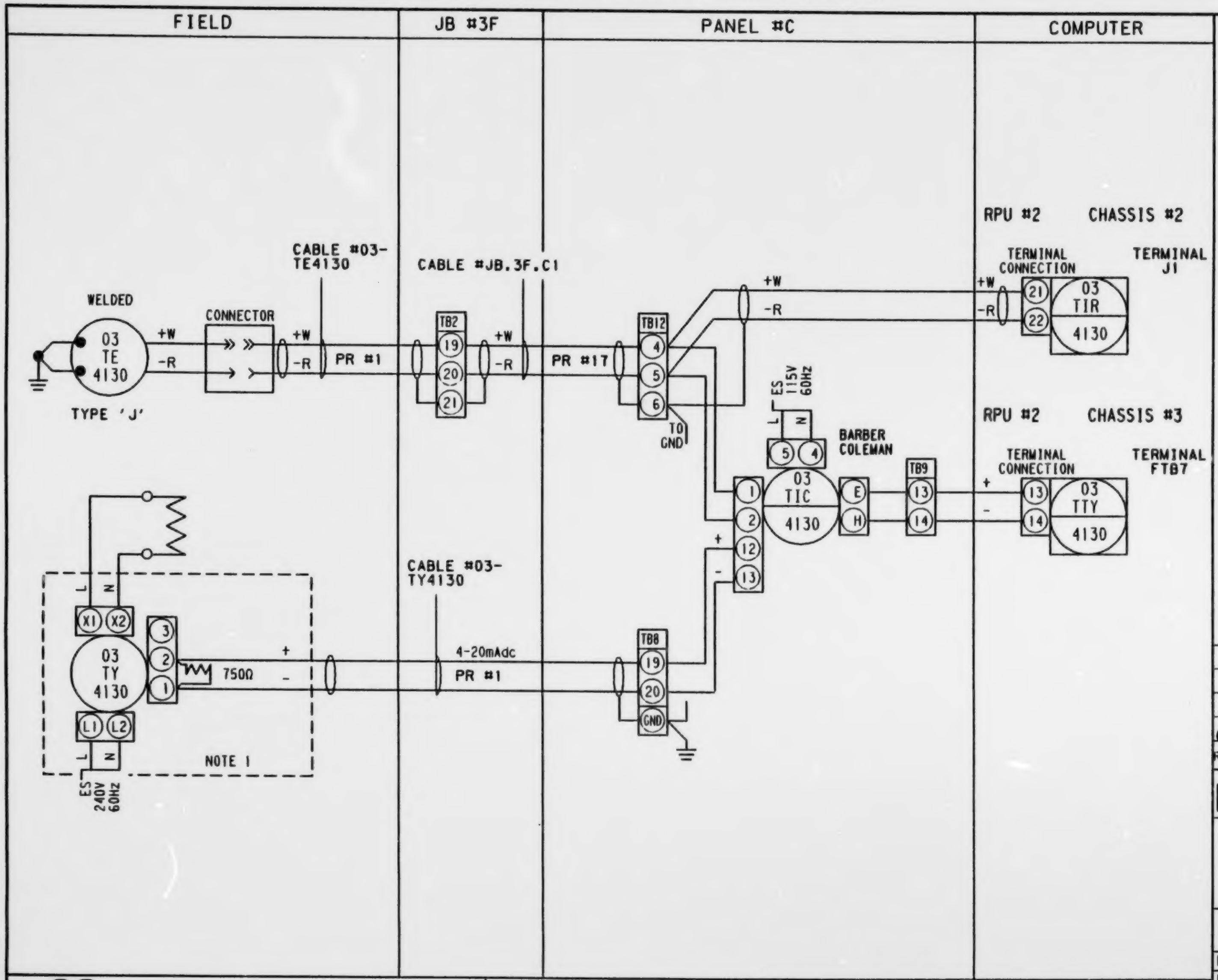

NOTES:
1. SCR's ARE MOUNTED IN SEPARATE PANEL, LOCATED IN THE OPERATING AISLE.

GENERAL NOTES:

A. 24 VAC Power Supply from GFC, Hammond Series Power Supply in panel.

B. 4-20mA signals to computer are shunted by EMR with a resistor to provide voltage signal to computer card.

C. Compatibility of voltage signals to computer programmed by EMR.

REV	DATE	DESCRIPTION	CHK	MEC APP	EMR APP
01	86.09	PH.1 FINAL			
00	86.07.14	FOR EMR APPROVAL	RN		✓

Energy, Mines and Resources Canada — Énergie, Mines et Ressources Canada

LOOP DIAGRAM
03-T-4130
AREA 3
REACTOR AND SAMPLING SYSTEM

EMR COPROCESSING PILOT PLANT
PP3

PID No.	D-3-3 -MP-2
DRAWN	CAD DATE 86.06.16
CHKD	REV
DESIGN	01

Monenco Consultants Limited

WORK ORDER No. DSS 8279-3

REG. No. 203987

LOOP3

B

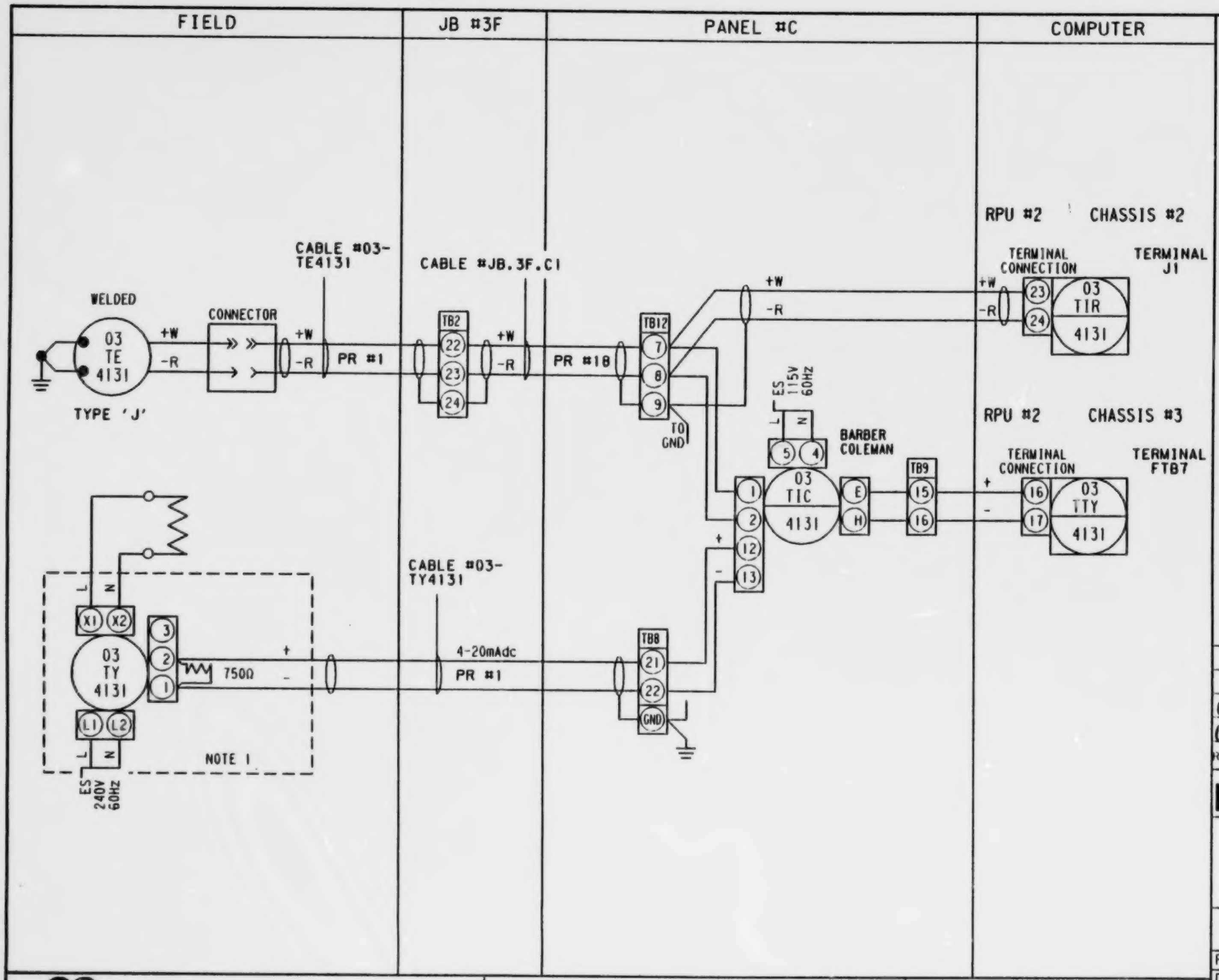

NOTES:
1. SCR's ARE MOUNTED IN SEPARATE PANEL, LOCATED IN THE OPERATING AISLE.

GENERAL NOTES:

A. 24 VAC Power Supply from GFC, Hammond Series Power Supply in panel.

B. 4-20mA signals to computer are shunted by EMR with a resistor to provide voltage signal to computer card.

C. Compatibility of voltage signals to computer programmed by EMR.

REV	DATE	DESCRIPTION	CHK	MEC APP	EMR APP
01	86.09	PH.1 FINAL	CP	[illegible]	
00	86.07.14	FOR EMR APPROVAL	RPW		✓

Energy, Mines and Resources Canada — Énergie, Mines et Ressources Canada

LOOP DIAGRAM
03-T-4131
AREA 3
REACTOR AND SAMPLING SYSTEM

EMR COPROCESSING PILOT PLANT
PP3

PID No.	D-3-3 -MP-2		
DRAWN	CAD	DATE	86.06.16
CHKD			REV
DESIGN			01

Monenco Consultants Limited | WORK ORDER No. DSS 8279-3 | REG. No. 203988

LOOP3

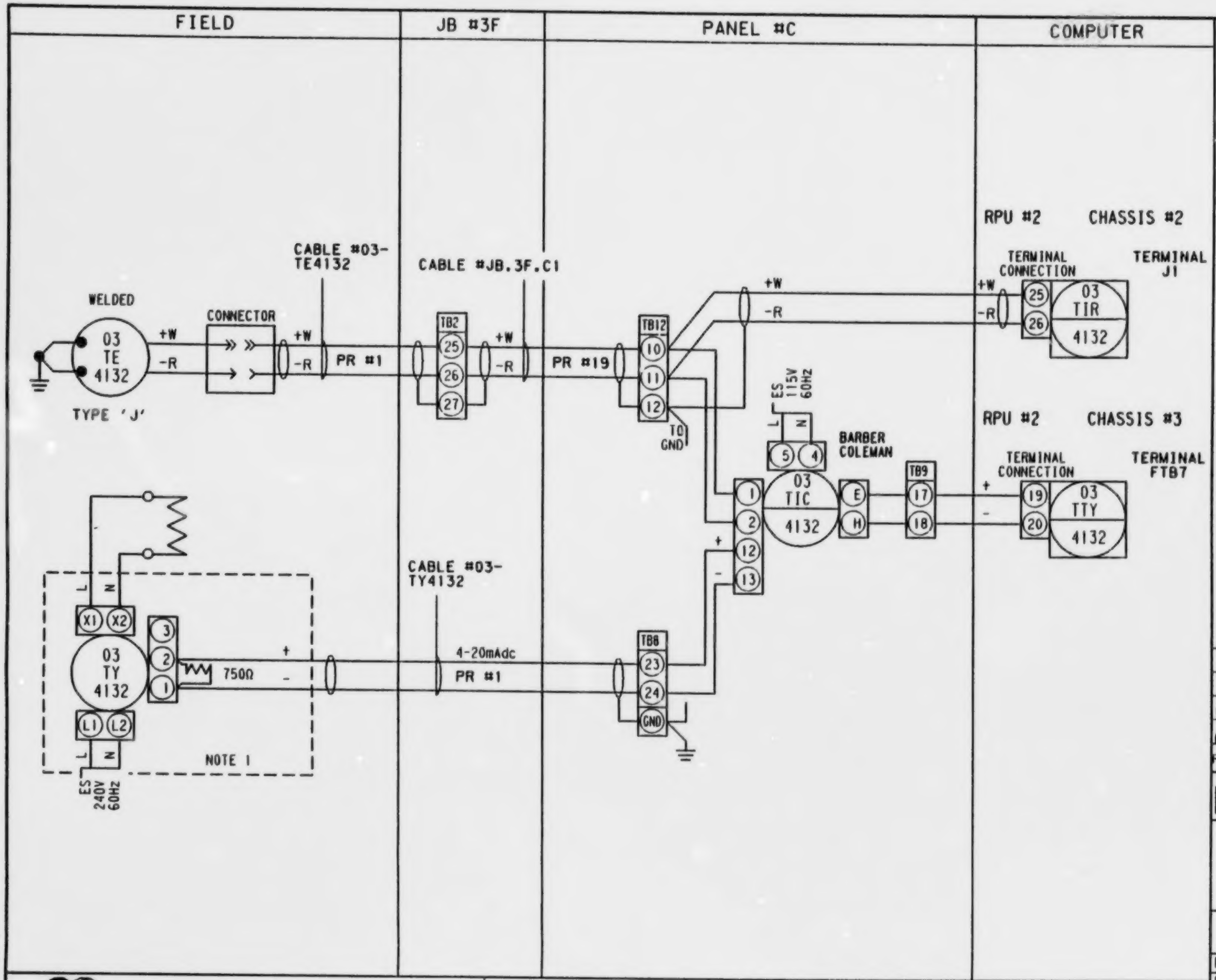

NOTES:

1. SCR's ARE MOUNTED IN SEPARATE PANEL, LOCATED IN THE OPERATING AISLE.

GENERAL NOTES:

A. 24 VAC Power Supply from GFC, Hammond Series Power Supply in panel.

B. 4-20mA signals to computer are shunted by EMR with a resistor to provide voltage signal to computer card.

C. Compatibility of voltage signals to computer programmed by EMR.

REV	DATE	DESCRIPTION	CHK	MEC APP	EMR APP
01	86.09	PILOT FINAL	GP	GMP	
00	86.07.14	FOR EMR APPROVAL	RPL		✓

Energy, Mines and Resources Canada — Énergie, Mines et Ressources Canada

LOOP DIAGRAM
03-T-4132
AREA 3
REACTOR AND SAMPLING SYSTEM

EMR COPROCESSING PILOT PLANT
PP3

PID No. D-3-3 -MP-2
DRAWN CAD DATE 86.06.16
CHKD
DESIGN
REV 01

Monenco Consultants Limited

WORK ORDER No. DSS 8279-3

REG. No. 203989

LOOP3

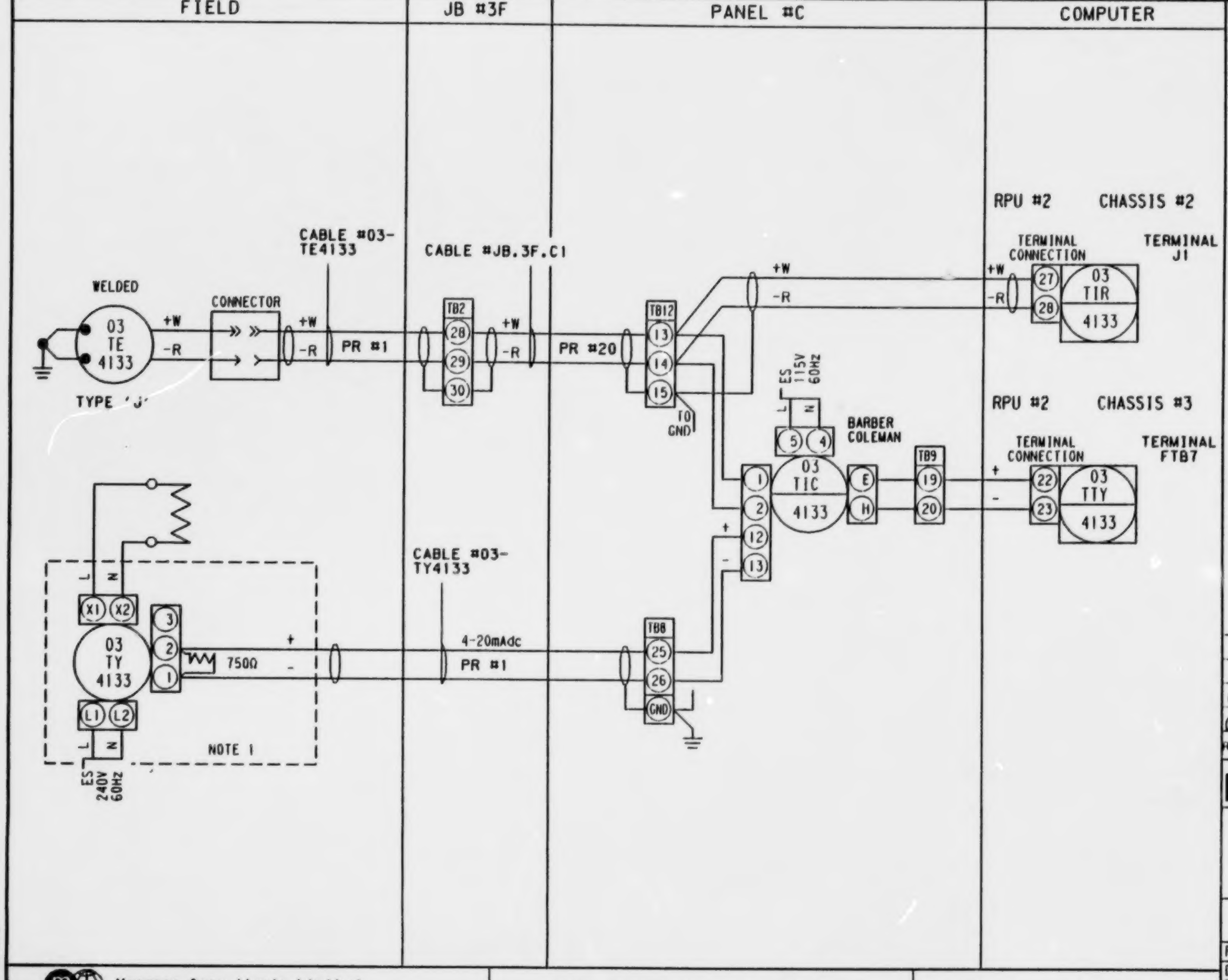

NOTES:

1. SCR's ARE MOUNTED IN SEPARATE PANEL, LOCATED IN THE OPERATING AISLE.

GENERAL NOTES:

A. 24 VAC Power Supply from GFC, Hammond Series Power Supply in panel.

B. 4-20mA signals to computer are shunted by EMR with a resistor to provide voltage signal to computer card.

C. Compatibility of voltage signals to computer programmed by EMR.

REV	DATE	DESCRIPTION	CHK	MEC APP	EMR APP
01	86.09	PH.1 FINAL	CP	GMP	
00	86.07.14	FOR EMR APPROVAL	RPW		✓

Energy, Mines and Resources Canada — Énergie, Mines et Ressources Canada

LOOP DIAGRAM
03-T-4133

AREA 3
REACTOR AND SAMPLING SYSTEM

EMR COPROCESSING PILOT PLANT
PP3

PID No.	D-3-3 -MP-2		
DRAWN	CAD	DATE	86.06.16
CHKD		REV	01
DESIGN			

Monenco Consultants Limited

WORK ORDER No. DSS 8279-3

REG. No. 203990

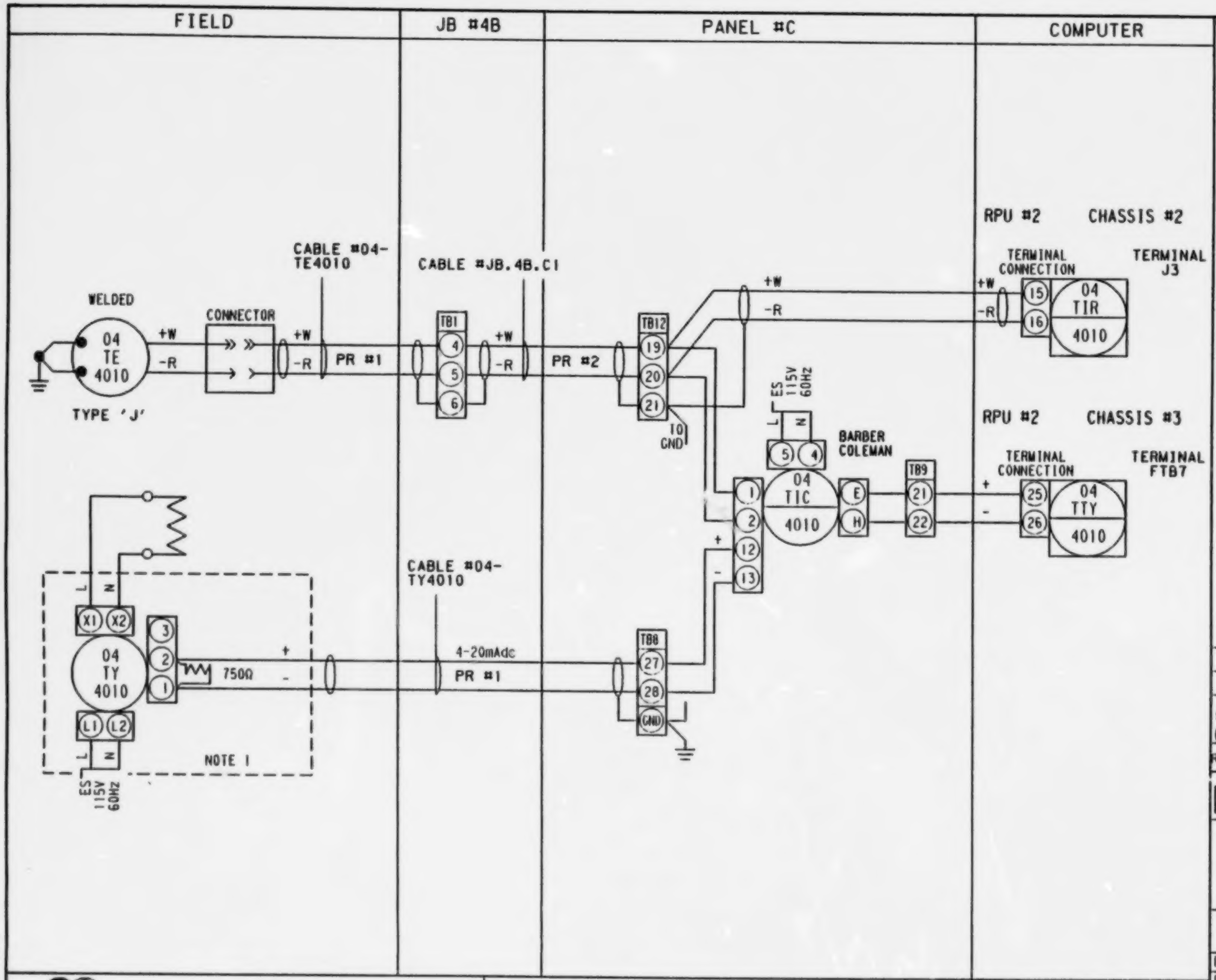

NOTES:
1. SCR's ARE MOUNTED IN SEPARATE PANEL, LOCATED IN THE OPERATING AISLE.

GENERAL NOTES:

A. 24 VAC Power Supply from GFC, Hammond Series Power Supply in panel.

B. 4-20mA signals to computer are shunted by EMR with a resistor to provide voltage signal to computer card.

C. Compatibility of voltage signals to computer programmed by EMR.

REV	DATE	DESCRIPTION	CHK	MEC APP	EMR APP
01	86.09	PH.1 FINAL	CP	WAP	
00	86.07.14	FOR EMR APPROVAL	RAJ		✓

Energy, Mines and Resources Canada — Énergie, Mines et Ressources Canada

LOOP DIAGRAM
04-T-4010
AREA 4
HEAVY OIL SYSTEM

EMR COPROCESSING PILOT PLANT
PP3

PID No.	D-3-4 -MP-1
DRAWN	CAD
DATE	86.06.12
CHKD	
DESIGN	
REV	01

Monenco Consultants Limited

WORK ORDER No. DSS 8279-3

REG. No. 203992

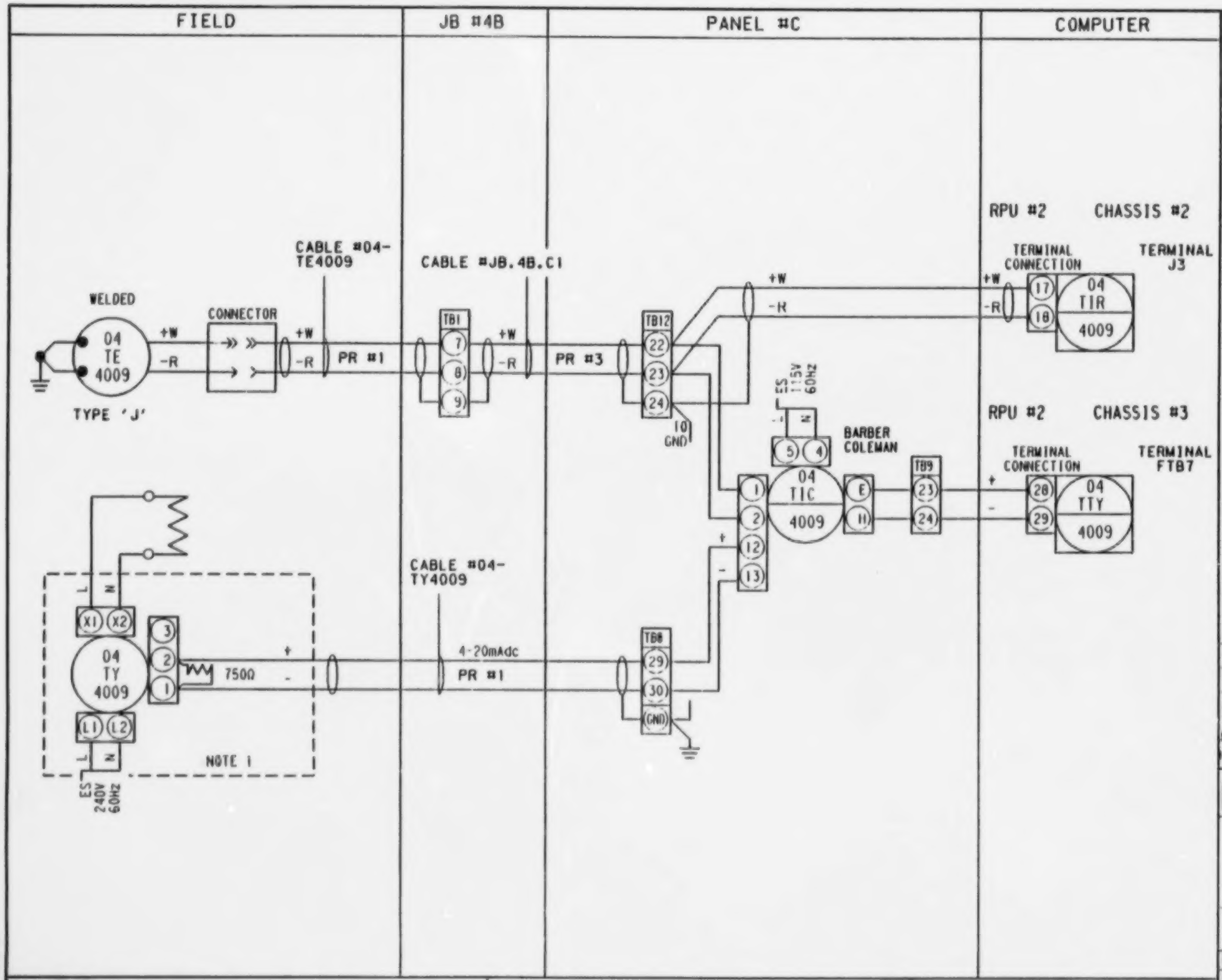

NOTES:

1. SCR's ARE MOUNTED IN SEPARATE PANEL, LOCATED IN THE OPERATING AISLE.

GENERAL NOTES:

A. 24 VAC Power Supply from GFC, Hammond Series Power Supply in panel.

B. 4-20mA signals to computer are shunted by EMR with a resistor to provide voltage signal to computer card.

C. Compatibility of voltage signals to computer programmed by EMR.

REV	DATE	DESCRIPTION	CHK	MEC APP	EMR APP
01	86.09	P&I FINAL	CP	WAR	
00	86.07.14	FOR EMR APPROVAL	RAJ		✓

Energy, Mines and Resources Canada — Énergie, Mines et Ressources Canada

LOOP DIAGRAM
04-T-4009
AREA 4
HEAVY OIL SYSTEM

EMR COPROCESSING PILOT PLANT PP3

PID No.	D-3-4 -MP-1		
DRAWN	CAD	DATE	86.06.12
CHKD			REV 01
DESIGN			

Monenco Consultants Limited | WORK ORDER No. DSS 8279-3 | REG. No. 203993

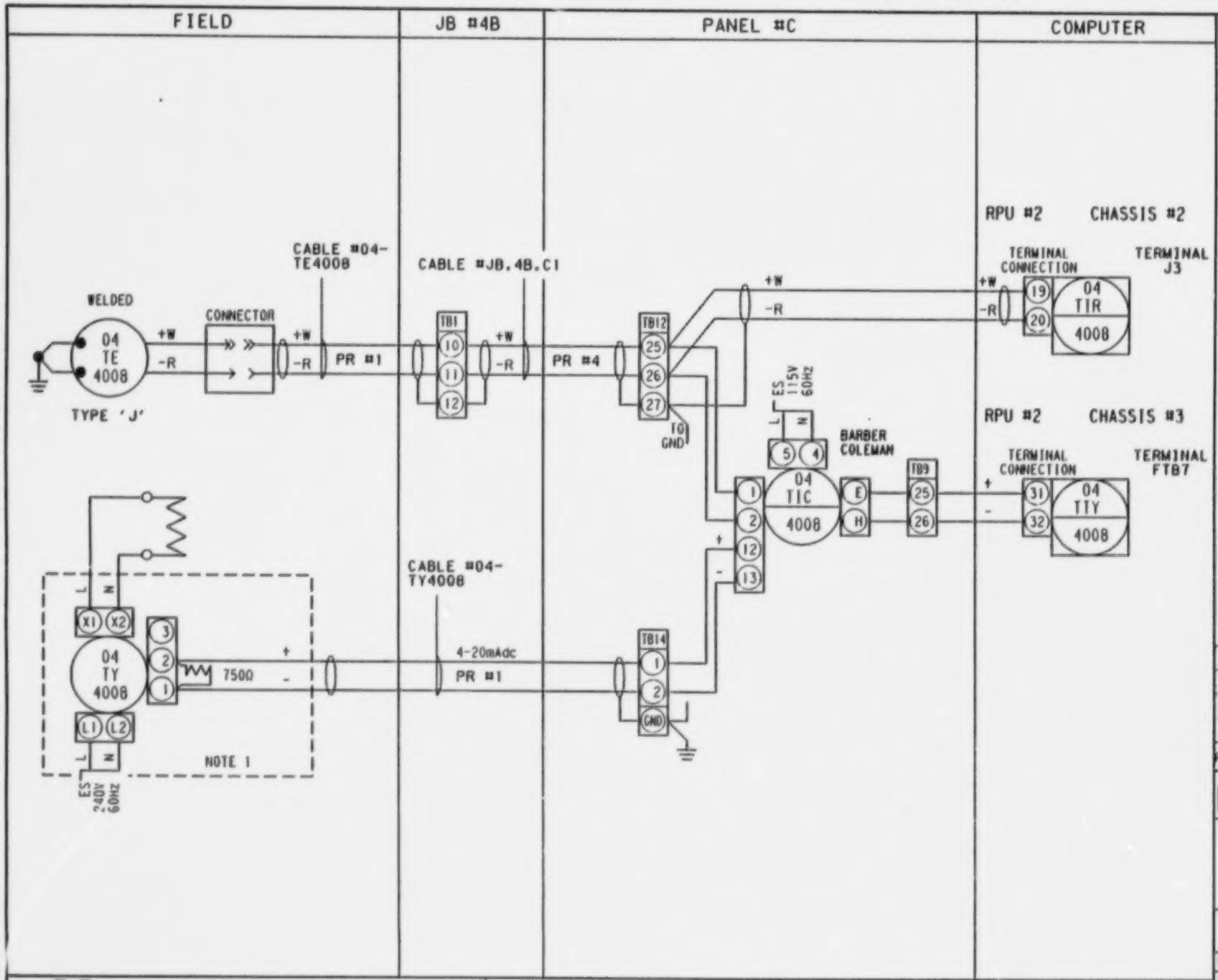

NOTES:

1. SCR's ARE MOUNTED IN SEPARATE PANEL, LOCATED IN THE OPERATING AISLE.

GENERAL NOTES:

A. 24 VAC Power Supply from GFC, Hammond Series Power Supply in panel.

B. 4-20mA signals to computer are shunted by EMR with a resistor to provide voltage signal to computer card.

C. Compatibility of voltage signals to computer programmed by EMR.

REV	DATE	DESCRIPTION	CHK	MEC APP	EMR APP
01	86.09	PH.1 FINAL	CP	GMP	
00	86.07.14	FOR EMR APPROVAL	RPW		✓

Energy, Mines and Resources Canada — Énergie, Mines et Ressources Canada

LOOP DIAGRAM
04-T-4008
AREA 4
HEAVY OIL SYSTEM

EMR COPROCESSING PILOT PLANT
PP3

PID No.	D-3-4 -MP-1		
DRAWN	CAD	DATE	86.06.16
CHKD			REV
DESIGN			01

Monenco Consultants Limited | WORK ORDER No. DSS 8279-3 | REG. No. 203994

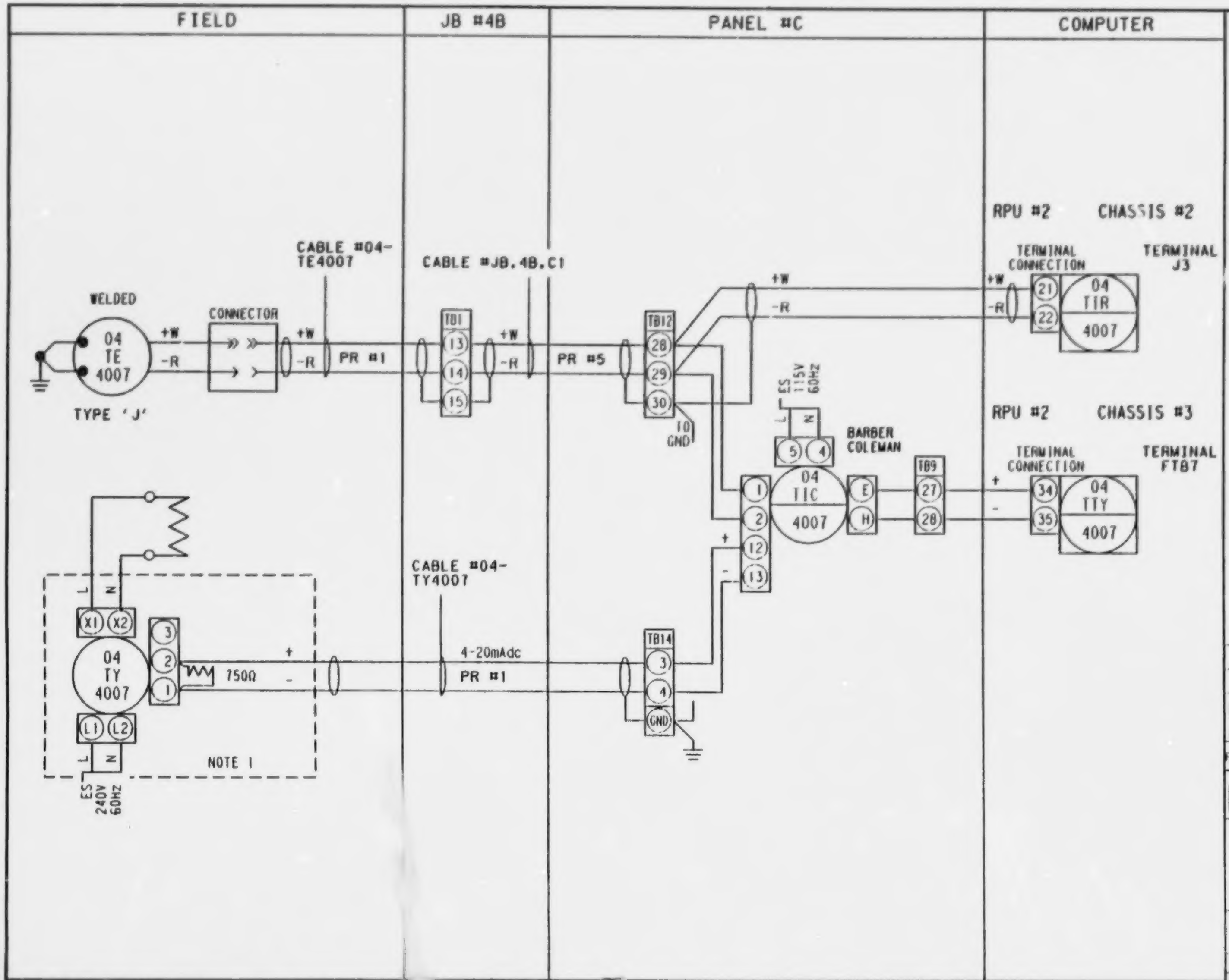

NOTES:

1. SCR's ARE MOUNTED IN SEPARATE PANEL, LOCATED IN THE OPERATING AISLE.

GENERAL NOTES:

A. 24 VAC Power Supply from GFC, Hammond Series Power Supply in panel.

B. 4-20mA signals to computer are shunted by EMR with a resistor to provide voltage signal to computer card.

C. Compatibility of voltage signals to computer programmed by EMR.

REV	DATE	DESCRIPTION	CHK	MEC APP	EMR APP
01	86.09	PH.1 FINAL	CP	UKR	
00	86.07.14	FOR EMR APPROVAL	RAW		✓

Energy, Mines and Resources Canada — Énergie, Mines et Ressources Canada

LOOP DIAGRAM
04-T-4007
AREA 4
HEAVY OIL SYSTEM

EMR COPROCESSING PILOT PLANT
PP3

PID No.	D-3-4 -MP-1		
DRAWN	CAD	DATE	86.06.16
CHKD		REV	01
DESIGN			

Monenco Consultants Limited

WORK ORDER No. DSS 8279-3

REG. No. 203995

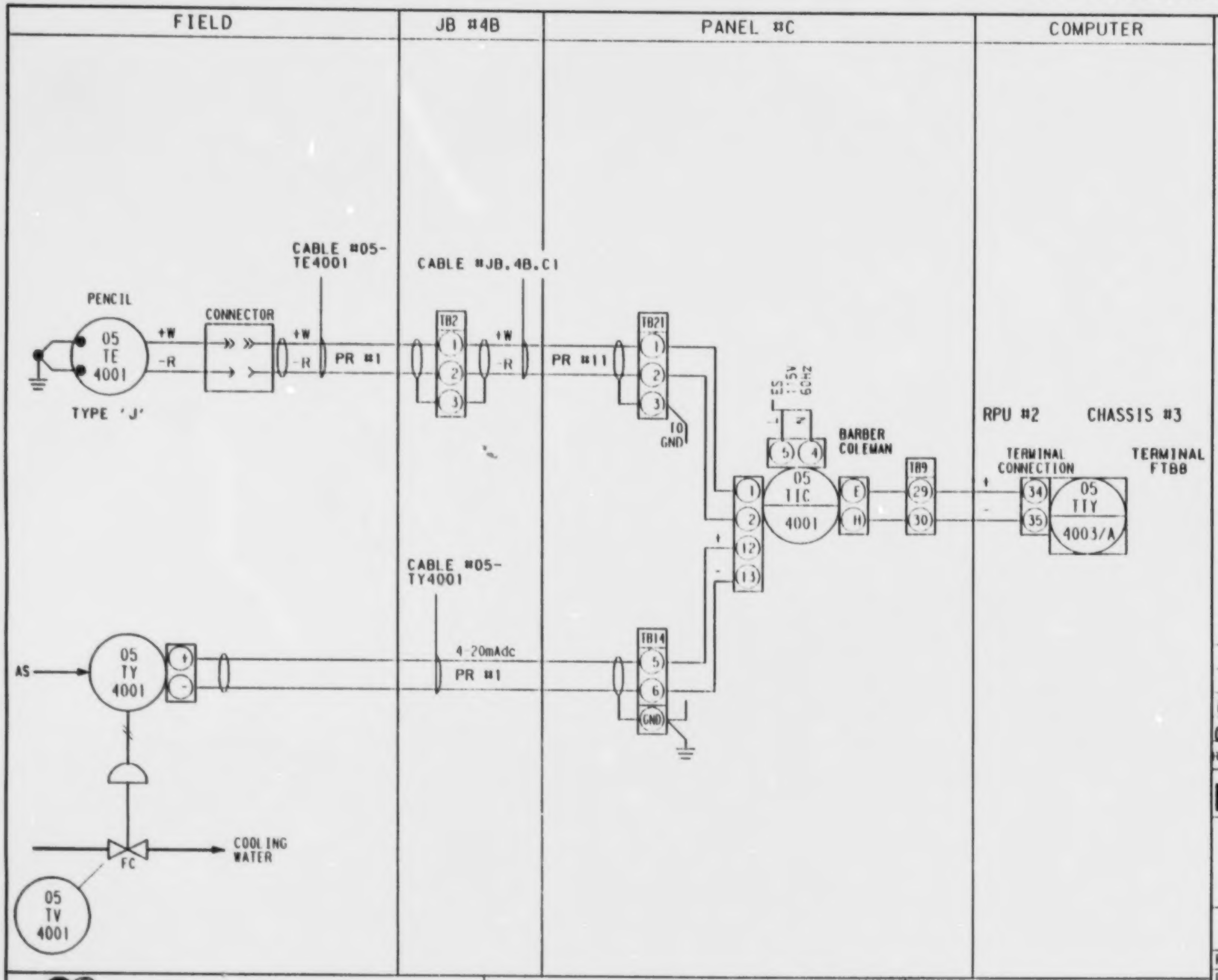

NOTES:

GENERAL NOTES:

A. 24 VAC Power Supply from GFC, Hammond Series Power Supply in panel.

B. 4-20mA signals to computer are shunted by EMR with a resistor to provide voltage signal to computer card.

C. Compatibility of voltage signals to computer programmed by EMR.

REV	DATE	DESCRIPTION	CHK	MEC APP	EMR APP
01	86.09	PIL! FINAL	GP	WAP	·
00	86.07.14	IOC EMR APPROVAL	RAJ		✓

Energy, Mines and Resources Canada — Énergie, Mines et Ressources Canada

LOOP DIAGRAM
05-T-4001
AREA 5
LIGHT OIL SYSTEM

EMR COPROCESSING PILOT PLANT
PP3

PID No.	D-3-5 -MP-1		
DRAWN	CAD	DATE	86.06.12
CHKD			REV
DESIGN			01

Monenco Consultants Limited

WORK ORDER No. DSS 8279-3

REG. No. 204022

THERMOCOUPLE LOOPS - ANALOG INPUT

LOOP NUMBER	REGISTRATION NUMBER	LOOP NUMBER	REGISTRATION NUMBER
01-T-2002/2013	203900	05-T-2002/2004	203944
01-T-2003/2011	203901	05-T-2006	203945
01-T-2014/2022	203923	05-T-2007	203999
		05-T-4003	203985
02-T-2004/2006	203924		
02-T-2008/2010	203925	06-T-2002	203921
02-T-2012/2014	203926		
		07-T-2002	203922
03-T-1017/1018/1019/1020	203902		
03-T-1021/1022/1023/1024	203903		
03-T-1025/1026/1027/1028	203904		
03-T-1029/1030/1031/1032	203905		
03-T-1033/1034/1035/1036	203906		
03-T-1037/1038/1039/1040	203907		
03-T-1041/1042/1043/1044	203908		
03-T-1066/1067/1068/1069	203909		
03-T-1070/1071/1072/1073	203910		
03-T-1074/1075/1076/1077	203911		
03-T-1078/1079/1080/1081	203912		
03-T-1082/1083/1084/1085	203913		
03-T-1086/1087/1088/1089	203914		
03-T-1090/1091/1092/1093	203915		
03-T-1094/1095/1096/1097	203916		
03-T-1098/1099	203917		
03-T-2128/2129/2130/2131	203918		
03-T-2132/2133/2134/2135	203919		
03-T-2136/2137	203920		
03-T-2138	203998		
03-T-2001/2002	203927		
03-T-2003/2004	203928		
03-T-2005/2006	203929		
03-T-2007/2008	203930		
03-T-2057/2058	203931		
03-T-2059/2060	203932		
03-T-2061/2062	203933		
03-T-2063/2064	203934		
03-T-2065	203935		
03-T-2121/2122	203936		
03-T-2123/2124	203937		
03-T-2125/2126	203938		
03-T-2127/2120	203939		
04-T-2001/2006	203941		
04-T-2005/2004	203942		
04-T-2003	203943		

NOTES:

SHIELDING, GROUNDING, CONDUCTOR IDENTIFICATION:

1. MULTICORE TX WIRE TO HAVE INDIVIDUAL PAIR SHIELDS. ALL OTHER SIGNALS UNSHIELDED.
2. ENSURE SHIELD CONTINUITY FROM SOURCE TO RECEIVER THROUGH INTERMEDIATE TERMINALS.
3. GROUND SHIELD AT INSTRUMENT PANEL ONLY. JUMPER ALL SHIELDS PER LOOP. IF RECEIVER AND SOURCE ARE IN FIELD, GROUND SHIELD AT SOURCE INSTRUMENT.
4. INTERNAL WIRING IN PANELS NOT TO BE SHIELDED.
5. ALL OUTER CASES OF INSTRUMENT CASES TO BE GROUNDED.
6. CONDUCTOR IDENTIFICATION:
   a) SIGNAL WIRE - CABLE NUMBER TO USE TAG No. OF SOURCE INSTRUMENT PLUS SERIAL No. 1, 2, etc.
   b) TX WIRE - USE SIGNAL WIRE DESIGNATION FOR CABLE No. AND PAIR No.

SYMBOLS:

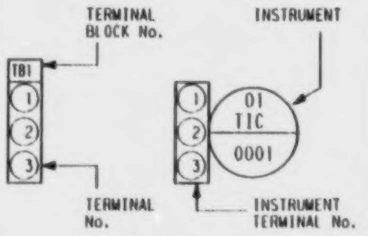

SEE PID, INSTRUMENT SYMBOL SHEET D-3-01-MP-2 FOR INSTRUMENT SYMBOL IDENTIFICATION PER ISA S51.1.

REV	DATE	DESCRIPTION	CHK	MEC APP	EMR APP
01	86.07	AH.I FINAL			
00	86.01.14	FOR EMR APPROVAL	RPN		✓

Energy, Mines and Resources Canada — Énergie, Mines et Ressources Canada

LIST OF THERMOCOUPLE LOOPS - ANALOG INPUT ONLY

INSTRUMENT LOOP DIAGRAM COVER SHEET

EMR COPROCESSING PILOT PLANT PP3

DRAWN | CAD | DATE 86.07.03
CHKD
DESIGN
REV 01

Monenco Consultants Limited — WORK ORDER No. DSS 8279-3 — REG. No. 204302

LOOP

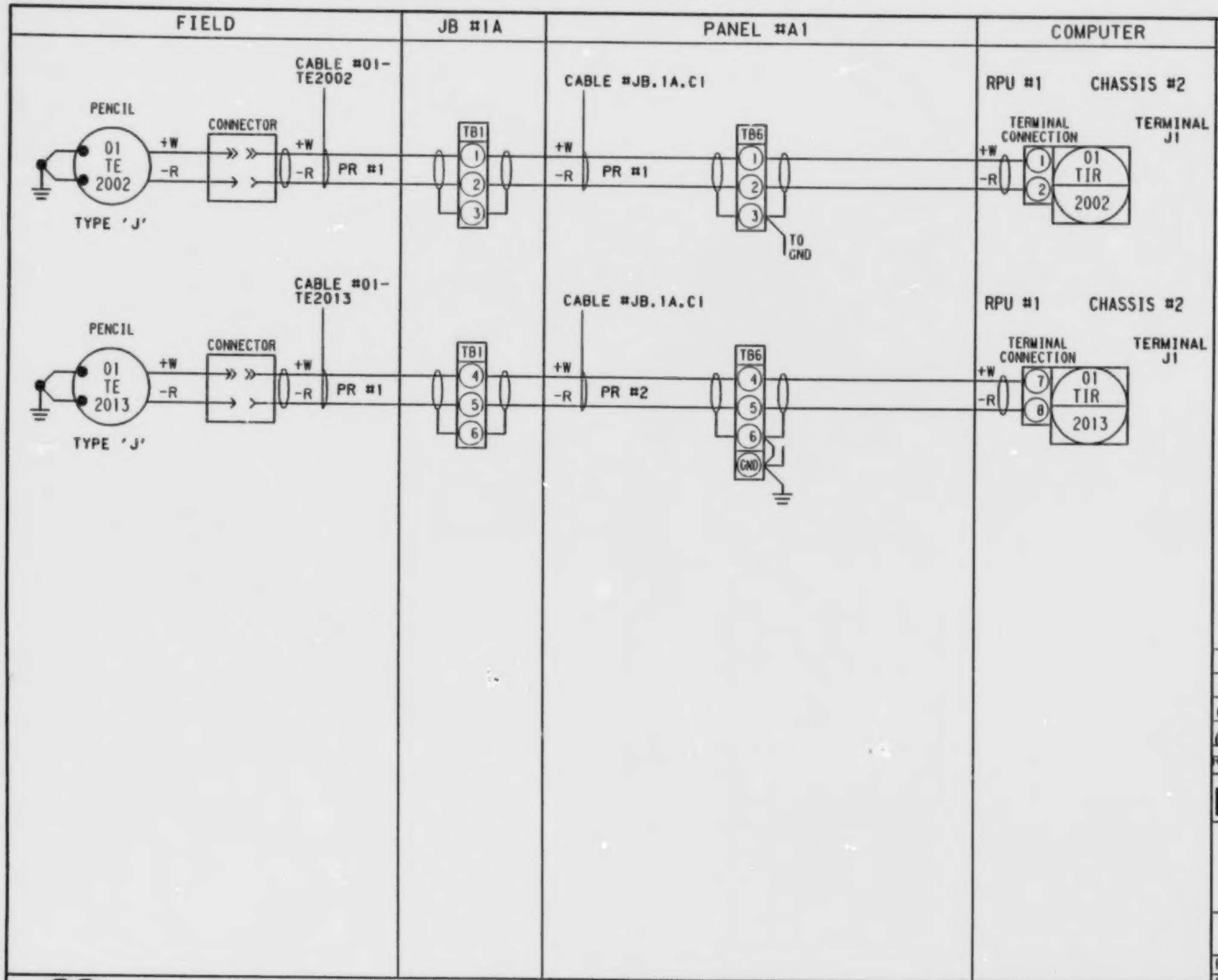

NOTES:

GENERAL NOTES:

A. 24 VAC Power Supply from GFC, Hammond Series Power Supply in panel.

B. 4-20mA signals to computer are shunted by EMR with a resistor to provide voltage signal to computer card.

C. Compatibility of voltage signals to computer programmed by EMR.

REV	DATE	DESCRIPTION	CHK	MEC APP	EMR APP
01	86.09	PH.1 FINAL	CP	GRP	
00	860714	FOR EMR APPROVAL	PAW		✓

Energy, Mines and Resources Canada — Énergie, Mines et Ressources Canada

LOOP DIAGRAM
01-T-2002/2013
AREA 1
SLURRY FEED SYSTEM

EMR COPROCESSING PILOT PLANT
PP3

PID No. D-3-1 -MP-1
DRAWN CAD DATE 86.05.15
CHKD
DESIGN
REV 01

Monenco Consultants Limited

WORK ORDER No. DSS 8279-3

REG. No. 203900

LOOP1

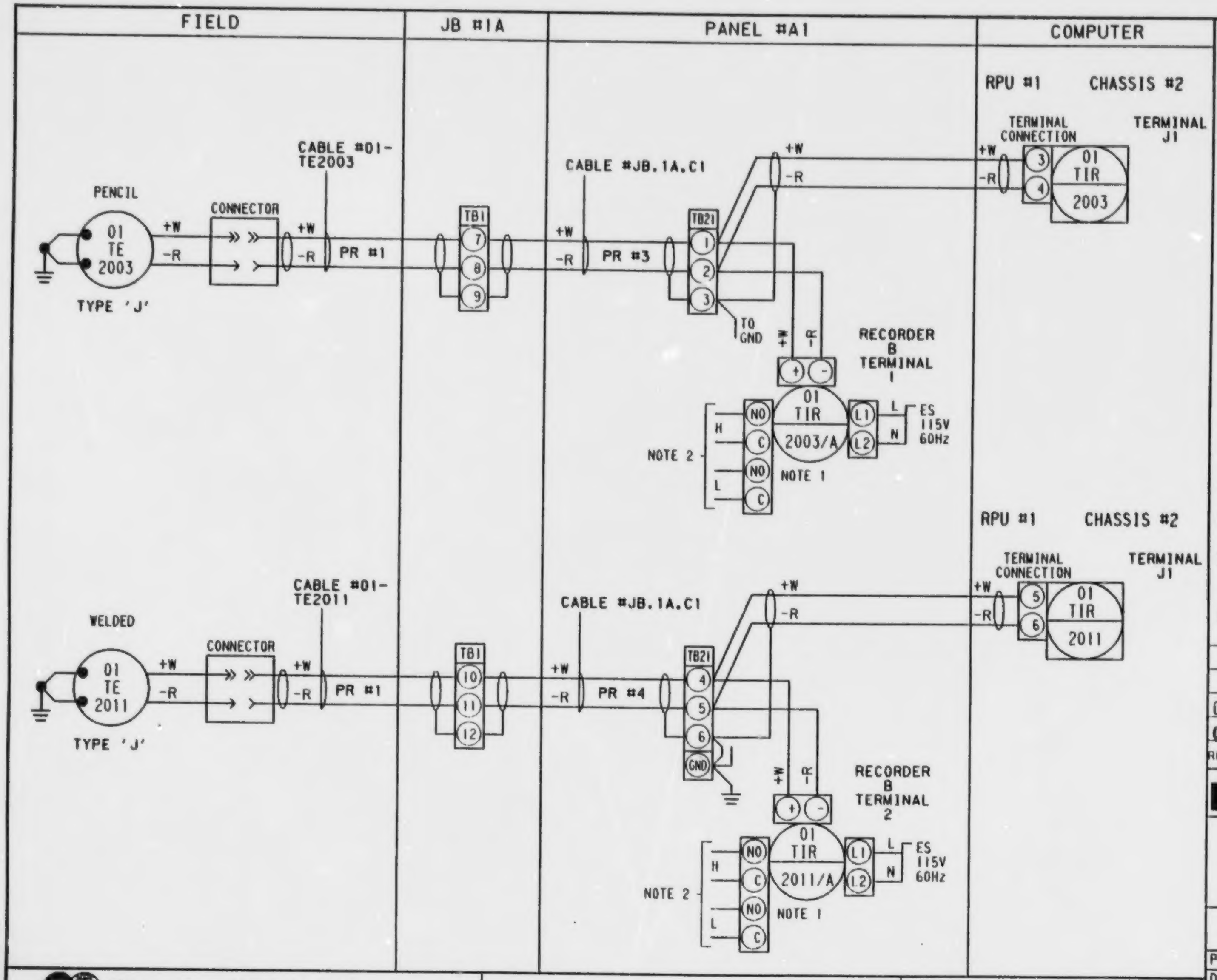

NOTES:
1. POINT-ON "YEW" MULTIPOINT RECORDER.
2. ALARM-WIRED TO COMMON PANEL ALARM. ONE SET OF ALARM CONTACTS PER RECORDER ARE COMMON TO ALL POINTS.

GENERAL NOTES:

A. 24 VAC Power Supply from GFC, Hammond Series Power Supply in panel.

B. 4-20mA signals to computer are shunted by EMR with a resistor to provide voltage signal to computer card.

C. Compatibility of voltage signals to computer programmed by EMR.

REV	DATE	DESCRIPTION	CHK	MEC APP	EMR APP
01	86.09	PH.1 FINAL	OP	WRP	
00	86.07.14	FOR EMR APPROVAL	RPN		✓

Energy, Mines and Resources Canada — Énergie, Mines et Ressources Canada

LOOP DIAGRAM
01-T-2003/2011
AREA 1
SLURRY FEED SYSTEM

EMR COPROCESSING PILOT PLANT
PP3

PID No.		D-3-1 -MP-1	
DRAWN	CAD	DATE	86.05.15
CHKD			REV
DESIGN			01

Monenco Consultants Limited

WORK ORDER No. DSS 8279-3

REG. No. 203901

LOOP12

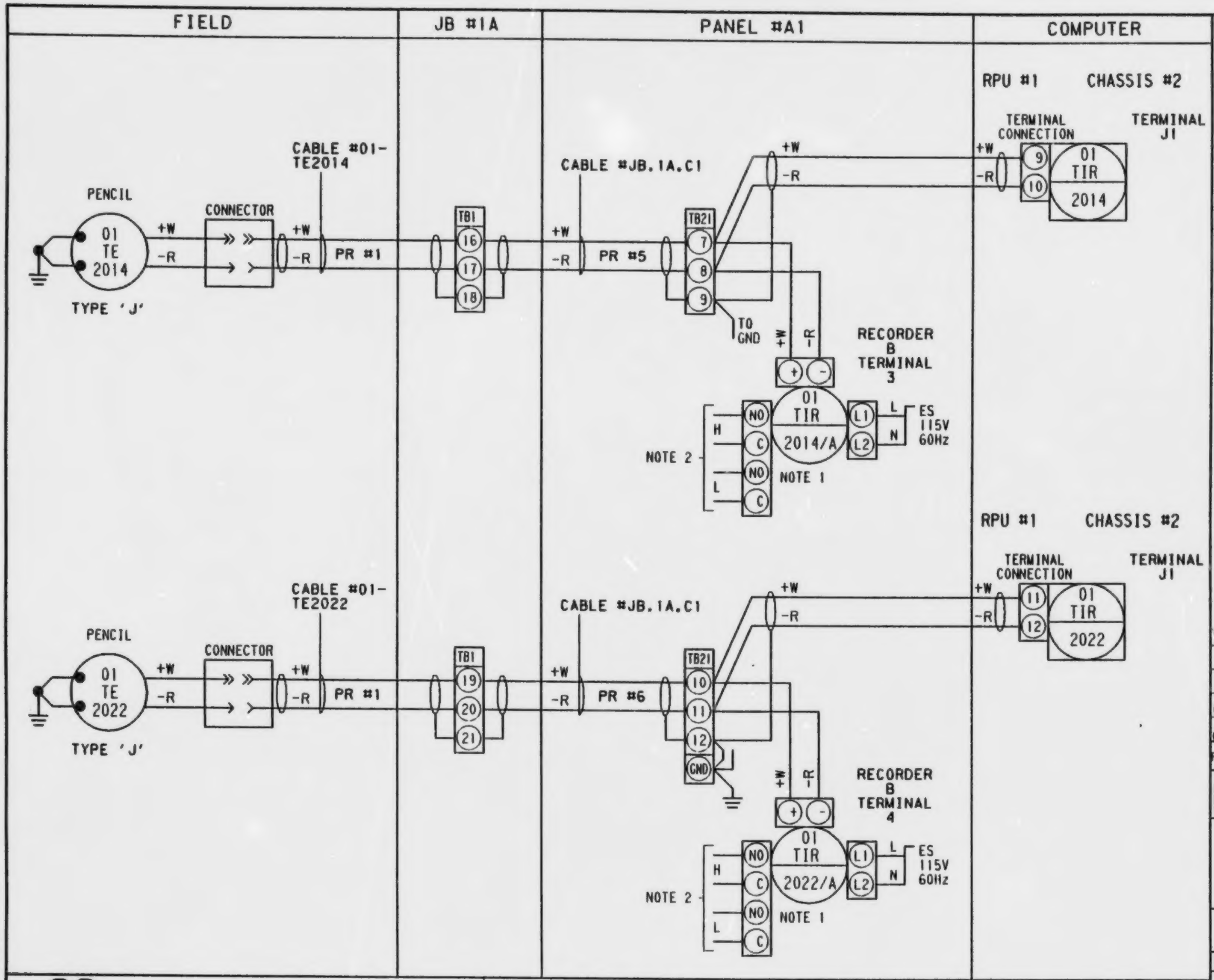

NOTES:

1. POINT-ON "YEW" MULTIPOINT RECORDER.
2. ALARM-WIRED TO COMMON PANEL ALARM. ONE SET OF ALARM CONTACTS PER RECORDER ARE COMMON TO ALL POINTS.

GENERAL NOTES:

A. 24 VAC Power Supply from GFC, Hammond Series Power Supply in panel.

B. 4-20mA signals to computer are shunted by EMR with a resistor to provide voltage signal to computer card.

C. Compatibility of voltage signals to computer programmed by EMR.

REV	DATE	DESCRIPTION	CHK	MEC APP	EMR APP
01	86.09	PH.1 FINAL	UP	WAP	
00	86.02.14	FOR EMR APPROVAL	RPW		✓

Energy, Mines and Resources Canada / Énergie, Mines et Ressources Canada

LOOP DIAGRAM
01-T-2014/2022
AREA 1
SLURRY FEED SYSTEM

EMR COPROCESSING PILOT PLANT PP3

PID No.	D-3-1 -MP-1		
DRAWN	CAD	DATE	86.06.16
CHKD		REV	01
DESIGN			

Monenco Consultants Limited

WORK ORDER No. DSS 8279-3

REG. No. 203923

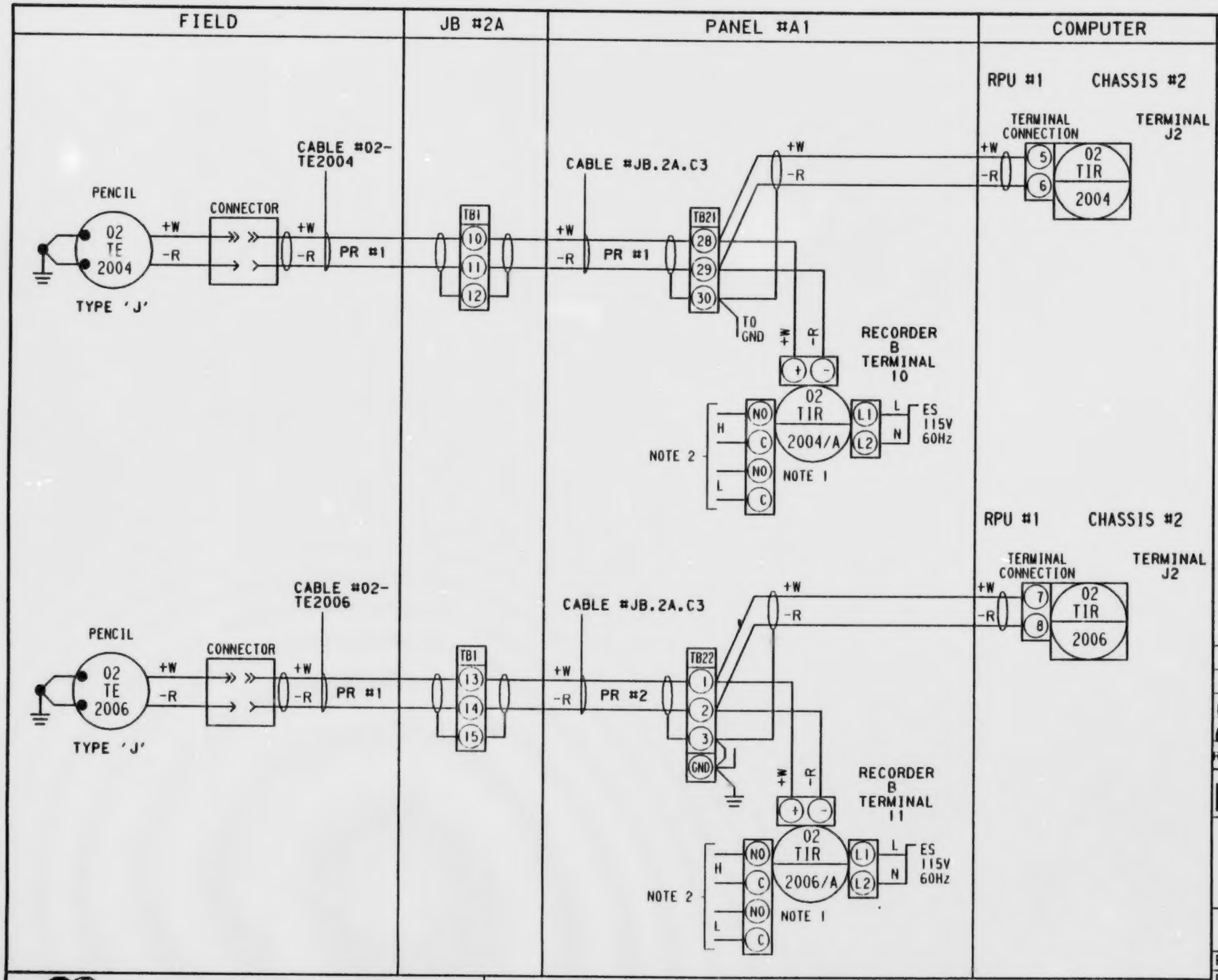

NOTES:
1. POINT-ON "YEW" MULTIPOINT RECORDER.
2. ALARM-WIRED TO COMMON PANEL ALARM. ONE SET OF ALARM CONTACTS PER RECORDER ARE COMMON TO ALL POINTS.

GENERAL NOTES:

A. 24 VAC Power Supply from GFC, Hammond Series Power Supply in panel.

B. 4-20mA signals to computer are shunted by EMR with a resistor to provide voltage signal to computer card.

C. Compatibility of voltage signals to computer programmed by EMR.

REV	DATE	DESCRIPTION	CHK	MEC APP	EMR APP
01	86.09	PH.1 FINAL			
00	86.07.14	FOR EMR APPROVAL	RIN		✓

Energy, Mines and Resources Canada — Énergie, Mines et Ressources Canada

LOOP DIAGRAM
02-T-2004/2006
AREA 2
FEED PREHEAT & DUMP SYSTEM

EMR COPROCESSING PILOT PLANT
PP3

PID No.	D-3-2 -MP-1		
DRAWN	CAD	DATE	86.06.16
CHKD			REV
DESIGN			01

Monenco Consultants Limited | WORK ORDER No. DSS 8279-3 | REG. No. 203924

LOOP12

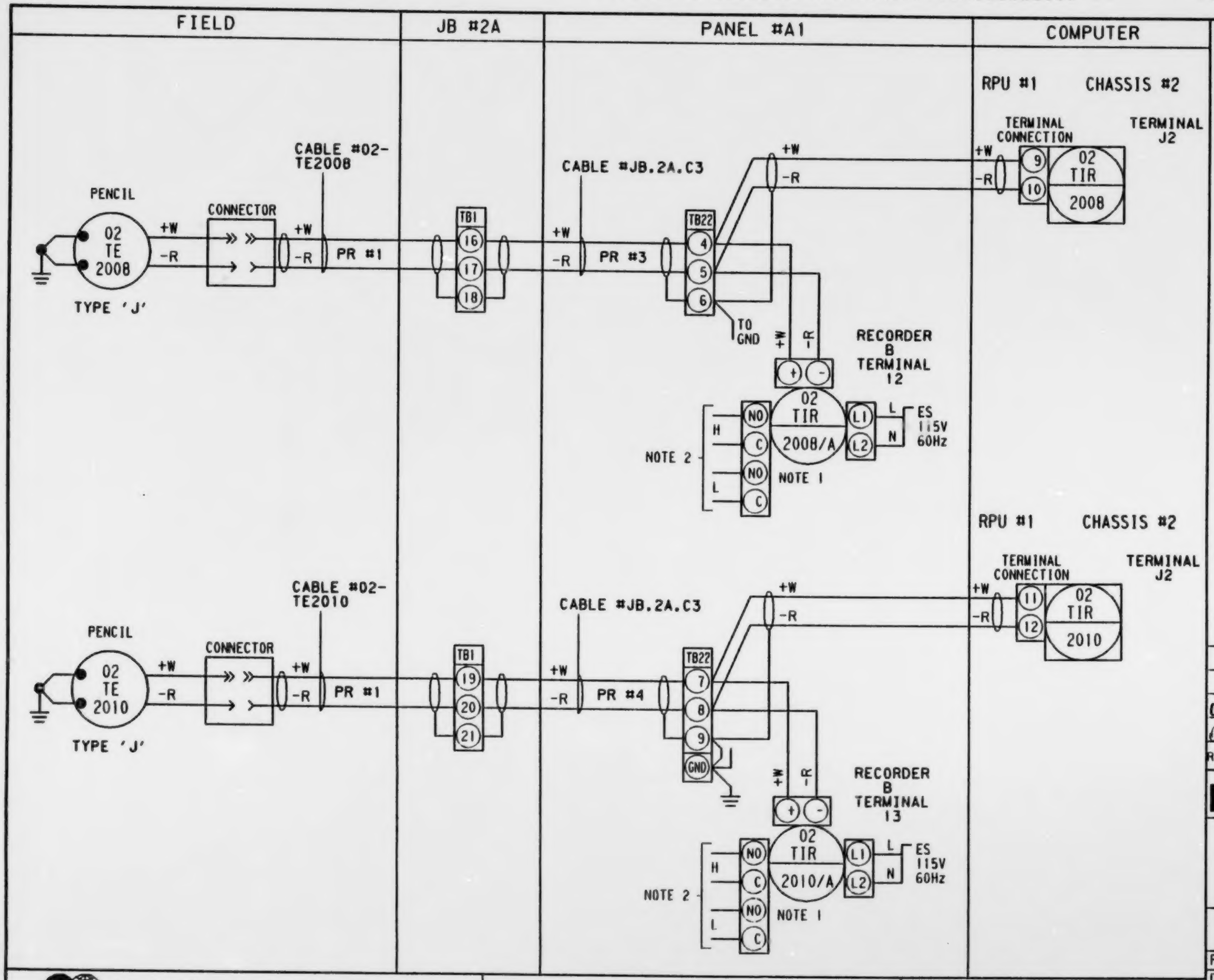

NOTES:
1. POINT-ON "YEW" MULTIPOINT RECORDER.
2. ALARM-WIRED TO COMMON PANEL ALARM. ONE SET OF ALARM CONTACTS PER RECORDER ARE COMMON TO ALL POINTS.

GENERAL NOTES:

A. 24 VAC Power Supply from GFC, Hammond Series Power Supply in panel.

B. 4-20mA signals to computer are shunted by EMR with a resistor to provide voltage signal to computer card.

C. Compatibility of voltage signals to computer programmed by EMR.

REV	DATE	DESCRIPTION	CHK	MEC APP	EMR APP
01	86.09	PH.1 FINAL		MAP	
00	86.07.14	FOR EMR APPROVAL	RDW		✓

Energy, Mines and Resources Canada — Énergie, Mines et Ressources Canada

LOOP DIAGRAM
02-T-2008/2010
AREA 2
FEED PREHEAT & DUMP SYSTEM

EMR COPROCESSING PILOT PLANT
PP3

PID No.	D-3-2 -MP-1		
DRAWN	CAD	DATE	86.06.13
CHKD			REV
DESIGN			01

Monenco Consultants Limited

WORK ORDER No. DSS 8279-3

REG. No. 203925

LOOP12

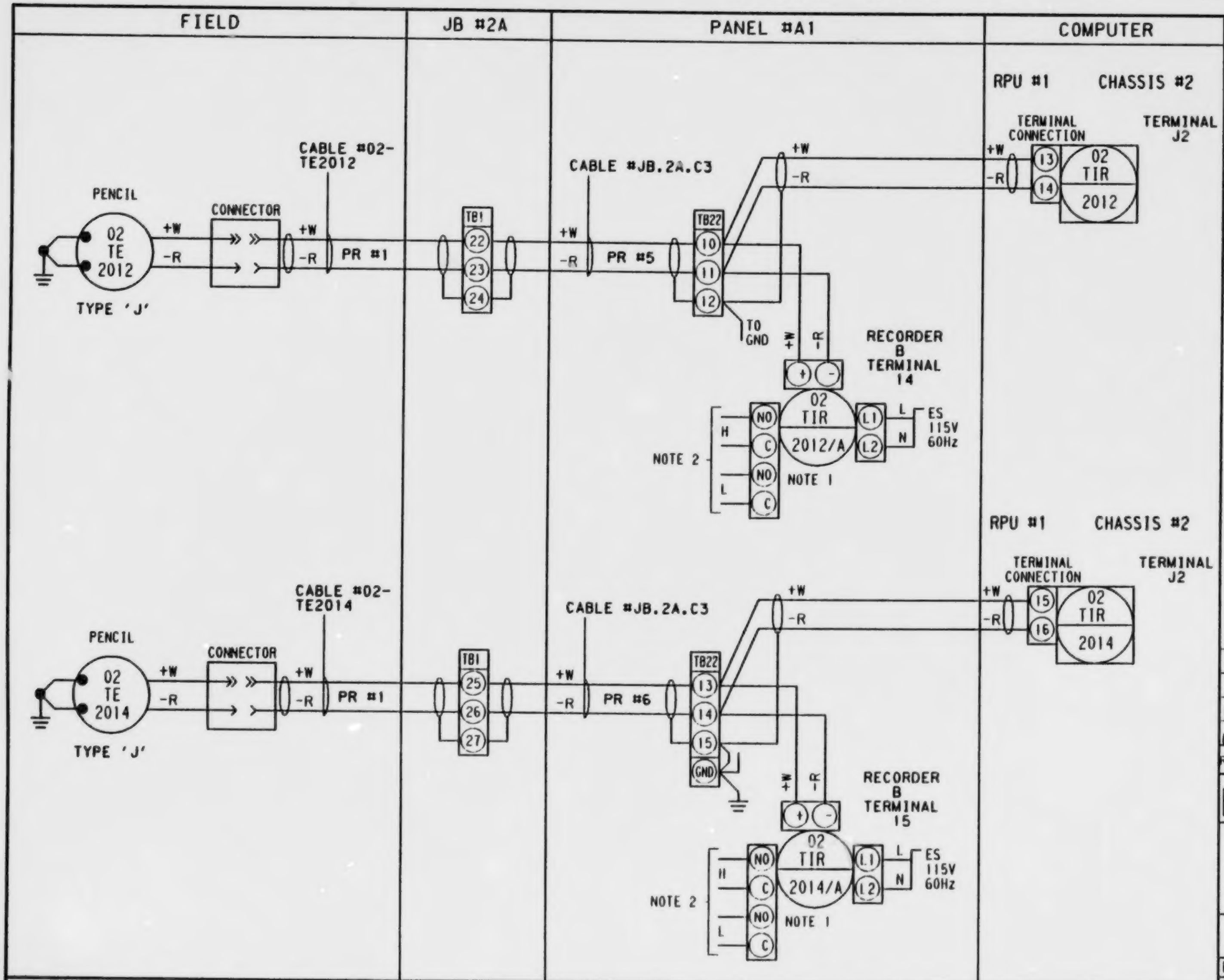

NOTES:
1. POINT-ON "YEW" MULTIPOINT RECORDER.
2. ALARM-WIRED TO COMMON PANEL ALARM. ONE SET OF ALARM CONTACTS PER RECORDER ARE COMMON TO ALL POINTS.

GENERAL NOTES:

A. 24 VAC Power Supply from GFC, Hammond Series Power Supply in panel.

B. 4-20mA signals to computer are shunted by EMR with a resistor to provide voltage signal to computer card.

C. Compatibility of voltage signals to computer programmed by EMR.

REV	DATE	DESCRIPTION	CHK	MEC APP	EMR APP
01	86.09	PH.1 FINAL			
00	86.07.14	FOR EMR APPROVAL	RAJ		✓

Energy, Mines and Resources Canada — Énergie, Mines et Ressources Canada

LOOP DIAGRAM
02-T-2012/2014
AREA 2
FEED PREHEAT&DUMP SYSTEM

EMR COPROCESSING PILOT PLANT
PP3

PID No.	D-3-2 -MP-1		
DRAWN	CAD	DATE	86.06.13
CHKD		REV	01
DESIGN			

Monenco Consultants Limited

WORK ORDER No. DSS 8279-3

REG. No. 203926

LOOP12 LOOP3

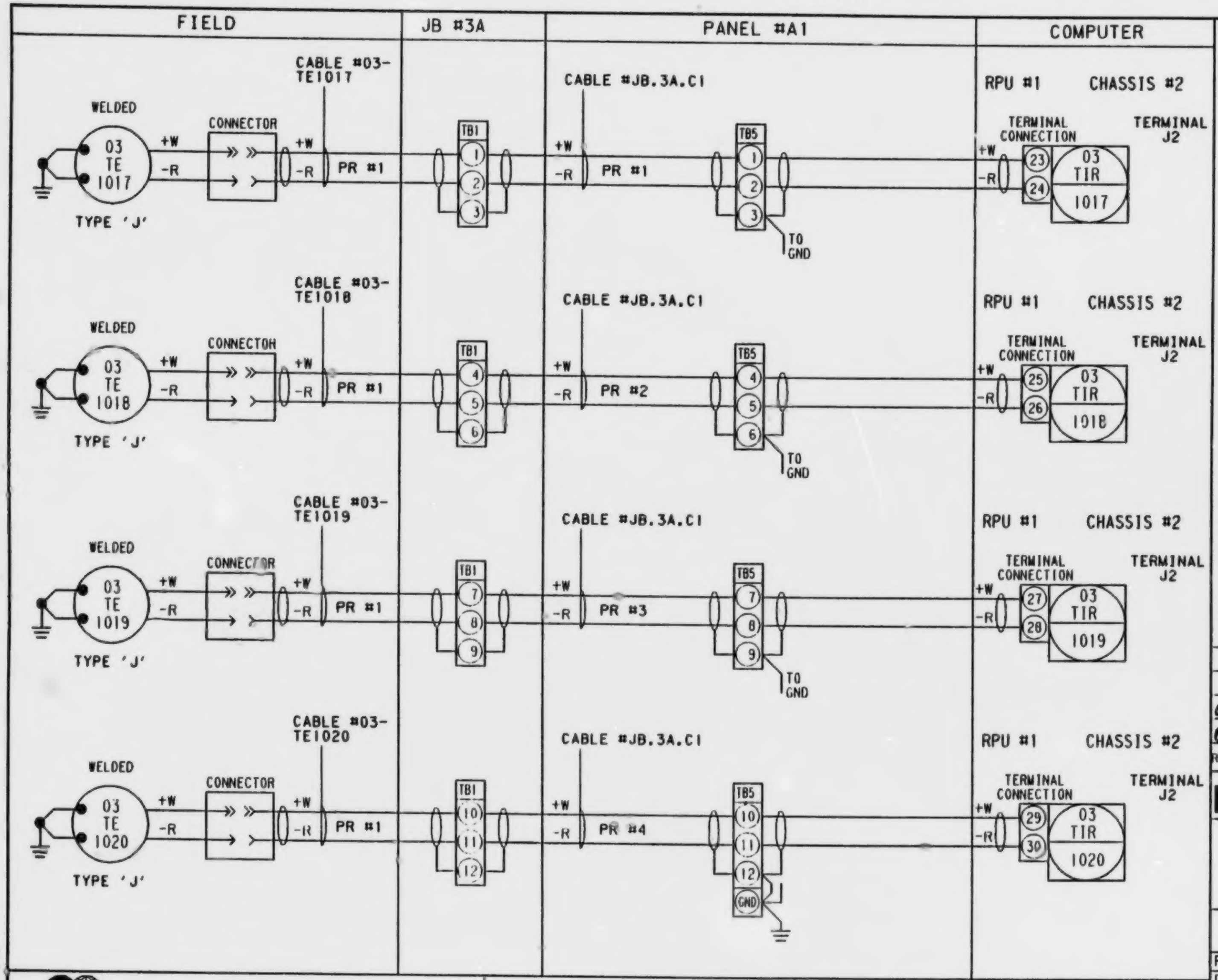

NOTES:

GENERAL NOTES:

A. 24 VAC Power Supply from GFC, Hammond Series Power Supply in panel.

B. 4-20mA signals to computer are shunted by EMR with a resistor to provide voltage signal to computer card.

C. Compatibility of voltage signals to computer programmed by EMR.

REV	DATE	DESCRIPTION	CHK	MEC APP	EMR APP
01	86.09	PH.1 FINAL	CP	WAF	
00	86.07.14	FOR EMR APPROVAL	RAJ		✓

Energy, Mines and Resources Canada — Énergie, Mines et Ressources Canada

LOOP DIAGRAM
03-T-1017/1018/1019/1020
AREA 3
REACTOR & SAMPLING SYSTEM.

EMR COPROCESSING PILOT PLANT
PP3

PID No.	D-3-3 -MP-1
DRAWN	CAD DATE 86.06.11
CHKD	REV 01
DESIGN	

Monenco Consultants Limited

WORK ORDER No. DSS 8279-3

REG. No. 203902

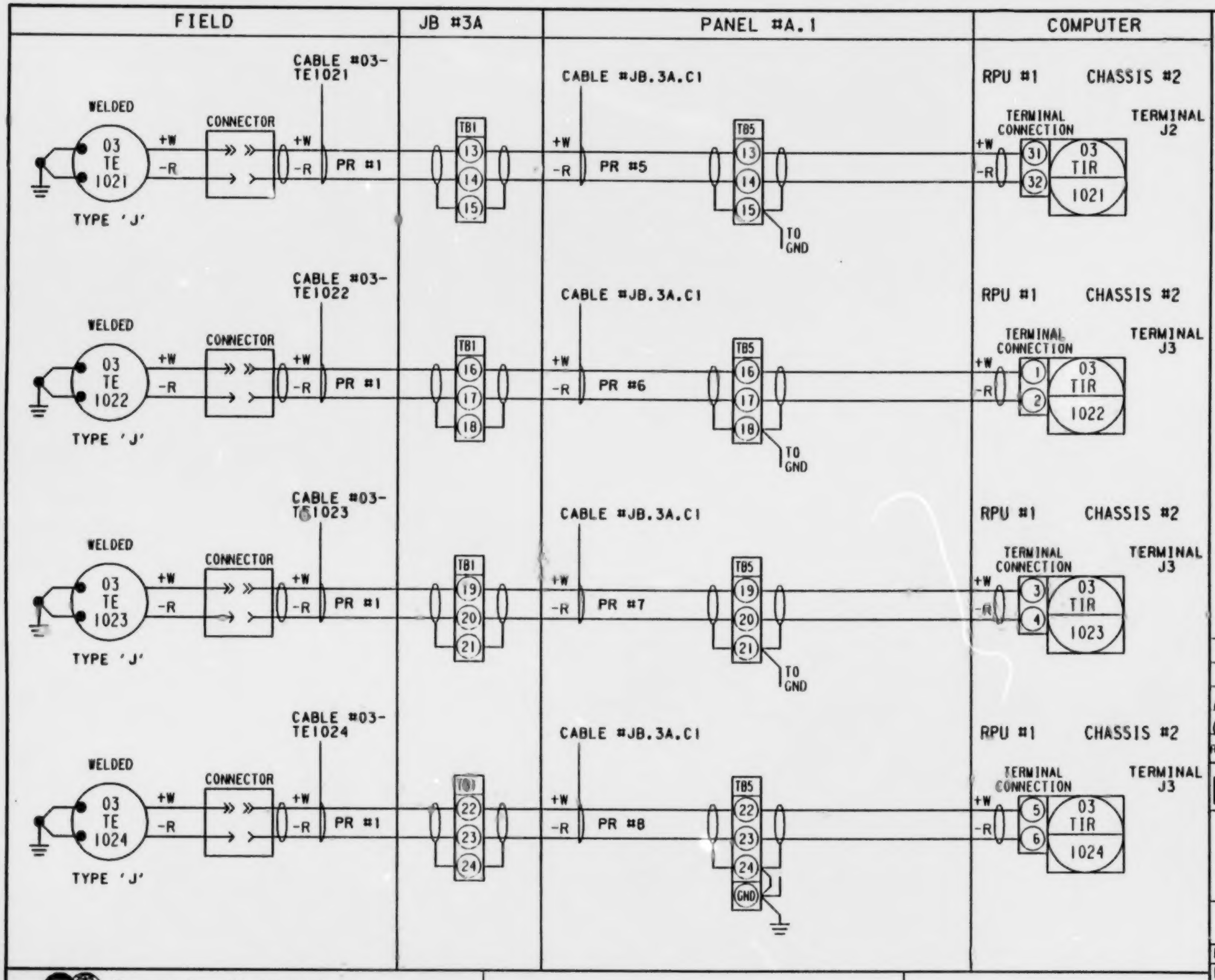

NOTES:

GENERAL NOTES:

A. 24 VAC Power Supply from GFC, Hammond Series Power Supply in panel.

B. 4-20mA signals to computer are shunted by EMR with a resistor to provide voltage signal to computer card.

C. Compatibility of voltage signals to computer programmed by EMR.

REV	DATE	DESCRIPTION	CHK	MEC APP	EMR APP
01	86.09	Pt.1 FINAL	UP	WBC	
00	86.07.14	FOR EMR APPROVAL	RPV		✓

Energy, Mines and Resources Canada — Énergie, Mines et Ressources Canada

LOOP DIAGRAM
03-T-1021/1022/1023/1024
AREA 3
REACTOR AND SAMPLING SYSTEM.

EMR COPROCESSING PILOT PLANT
PP3

PID No.	D-3-3 -MP-1		
DRAWN	CAD	DATE	86.06.11
CHKD		REV	01
DESIGN			

Monenco Consultants Limited

WORK ORDER No. DSS 8279-3

REG. No. 203903

LOOP1

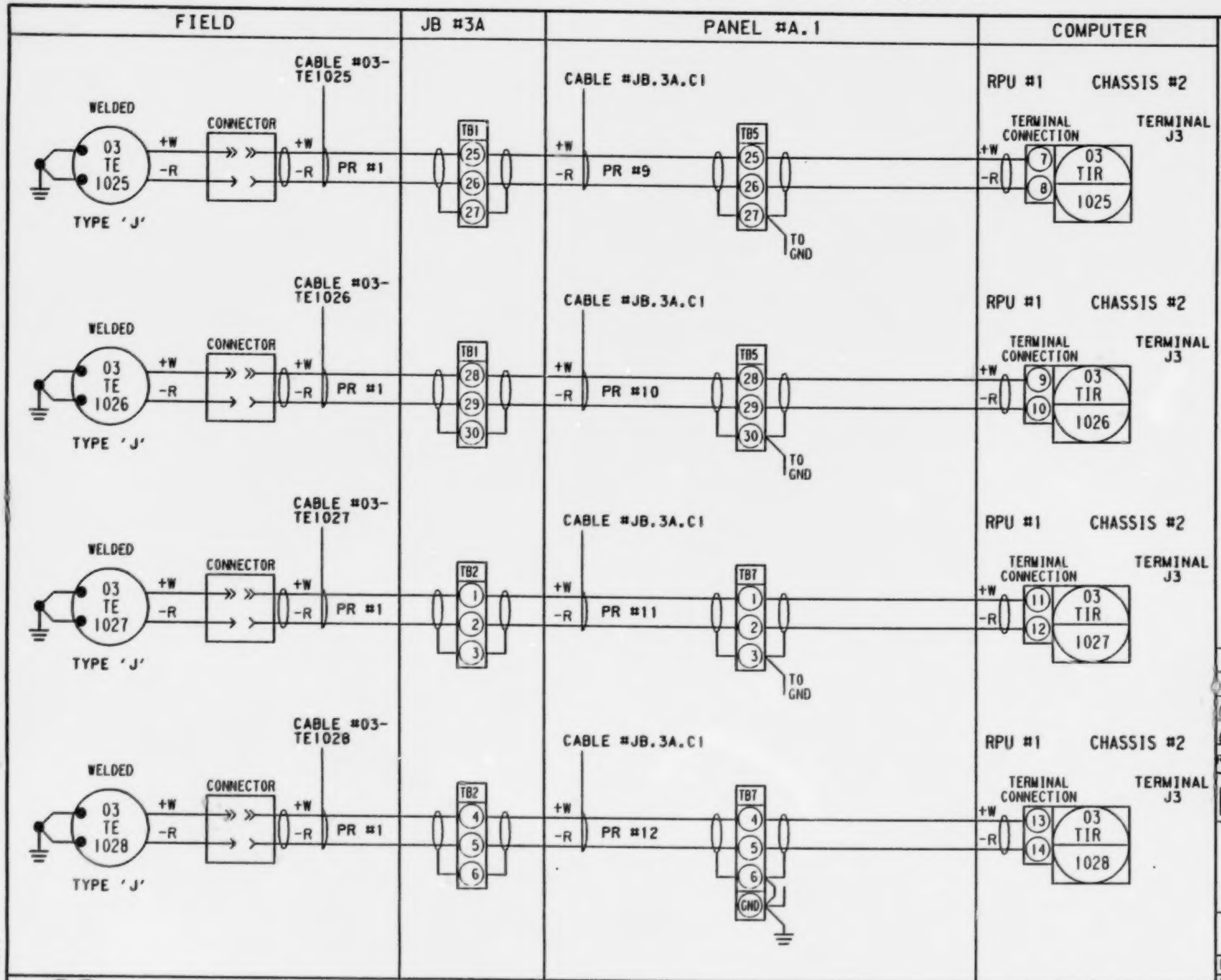

NOTES:

GENERAL NOTES:

A. 24 VAC Power Supply from GFC, Hammond Series Power Supply in panel.

B. 4-20mA signals to computer are shunted by EMR with a resistor to provide voltage signal to computer card.

C. Compatibility of voltage signals to computer programmed by EMR.

REV	DATE	DESCRIPTION	CHK	MEC APP	EMR APP
01	86.09	PH.1 FINAL			
00	86.07.14	FOR EMR APPROVAL			✓

Energy, Mines and Resources Canada — Énergie, Mines et Ressources Canada

LOOP DIAGRAM
03-T-1025/1026/1027/1028
AREA 3
REACTOR AND SAMPLING SYSTEM

EMR COPROCESSING PILOT PLANT
PP3

PID No.	D-3-3 -MP-1		
DRAWN	CAD	DATE	86.06.11
CHKD			REV
DESIGN			01

Monenco Consultants Limited

WORK ORDER No. DSS 8279-3

REG. No. 203904

LOOP1

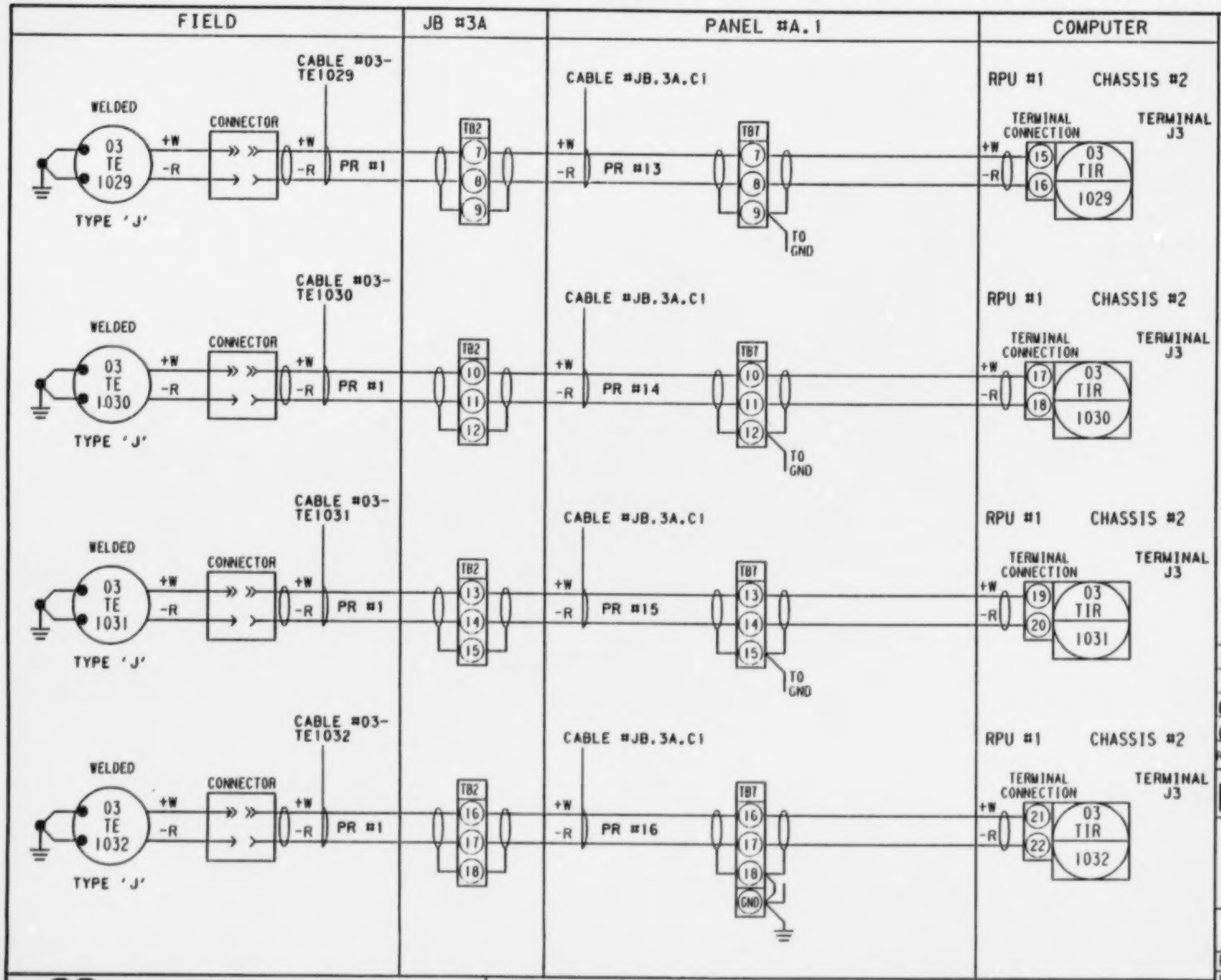

NOTES:

GENERAL NOTES:

A. 24 VAC Power Supply from GFC, Hammond Series Power Supply in panel.

B. 4-20mA signals to computer are shunted by EMR with a resistor to provide voltage signal to computer card.

C. Compatibility of voltage signals to computer programmed by EMR.

REV	DATE	DESCRIPTION	CHK	MEC APP	EMR APP
01	86.09	PH.1 FINAL	OP	WAP	
00	86.07.14	FOR EMR APPROVAL	RAW		✓

Energy, Mines and Resources Canada — Énergie, Mines et Ressources Canada

LOOP DIAGRAM
03-T-1029/1030/1031/1032
AREA 3
REACTOR AND SAMPLING SYSTEM

EMR COPROCESSING PILOT PLANT
PP3

PID No.	D-3-3 -MP-1	
DRAWN	CAD	DATE
CHKD		REV
DESIGN		01

Monenco Consultants Limited

WORK ORDER No. DSS 8279-3

REG. No. 203905

LOOP1

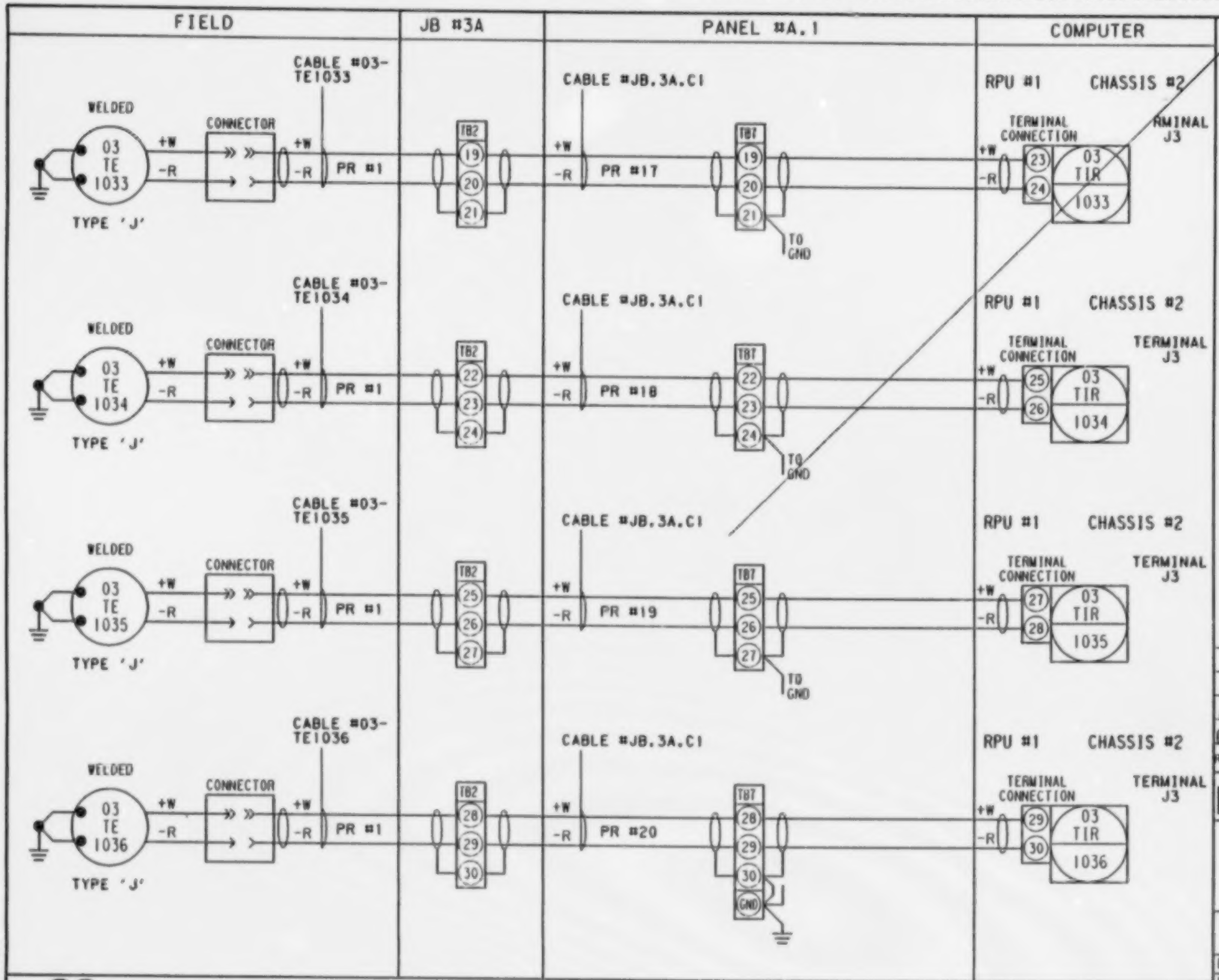

NOTES:

GENERAL NOTES:

A. 24 VAC Power Supply from GFC, Hammond Series Power Supply in panel.

B. 4-20mA signals to computer are shunted by EMR with a resistor to provide voltage signal to computer card.

C. Compatibility of voltage signals to computer programmed by EMR.

REV	DATE	DESCRIPTION	CHK	MEC APP	EMR APP
01	86.09	M.I FINAL	GP	[illegible]	
00	86.07.14	FOR EMR APPROVAL	RRJ		✓

Energy, Mines and Resources Canada — Énergie, Mines et Ressources Canada

LOOP DIAGRAM
03-T-1033/1034/1035/1036
AREA 3
REACTOR AND SAMPLING SYSTEM

EMR COPROCESSING PILOT PLANT
PP3

PID No. D-3-3 -MP-1
DRAWN CAD DATE 86.06.11
CHKD
DESIGN
REV 01

Monenco Consultants Limited

WORK ORDER No. DSS 8279-3

REG. No. 203906

LOOP1

B

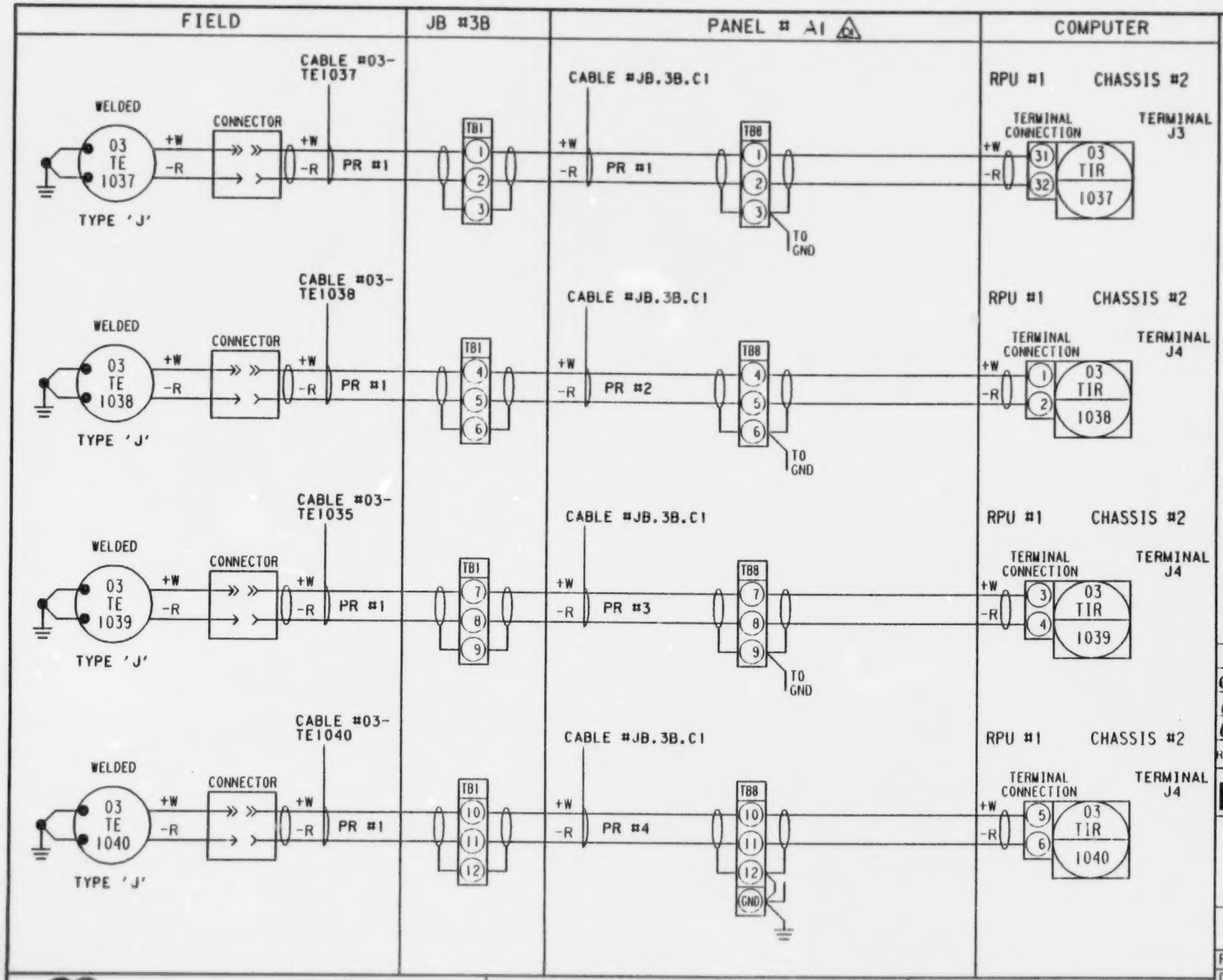

NOTES:

GENERAL NOTES:

A. 24 VAC Power Supply from GFC, Hammond Series Power Supply in panel.

B. 4-20mA signals to computer are shunted by EMR with a resistor to provide voltage signal to computer card.

C. Compatibility of voltage signals to computer programmed by EMR.

REV	DATE	DESCRIPTION	CHK	MEC APP	EMR APP
02	86.09	PH.1 FINAL	CP	WRP	
01	86.08.21	PANEL I.D. ADDED	CP		
00	86.07.14	FOR EMR APPROVAL	RAJ		✓

Energy, Mines and Resources Canada — Énergie, Mines et Ressources Canada

LOOP DIAGRAM
03-T-1037/1038/1039/1040
AREA 3
REACTOR AND SAMPLING SYSTEM

EMR COPROCESSING PILOT PLANT
PP3

PID No. D-3-3 -MP-1
DRAWN CAD | DATE 86.06.11
CHKD
DESIGN
REV 02

Monenco Consultants Limited

WORK ORDER No. DSS 8279-3

REG. No. 203907

LOOP1

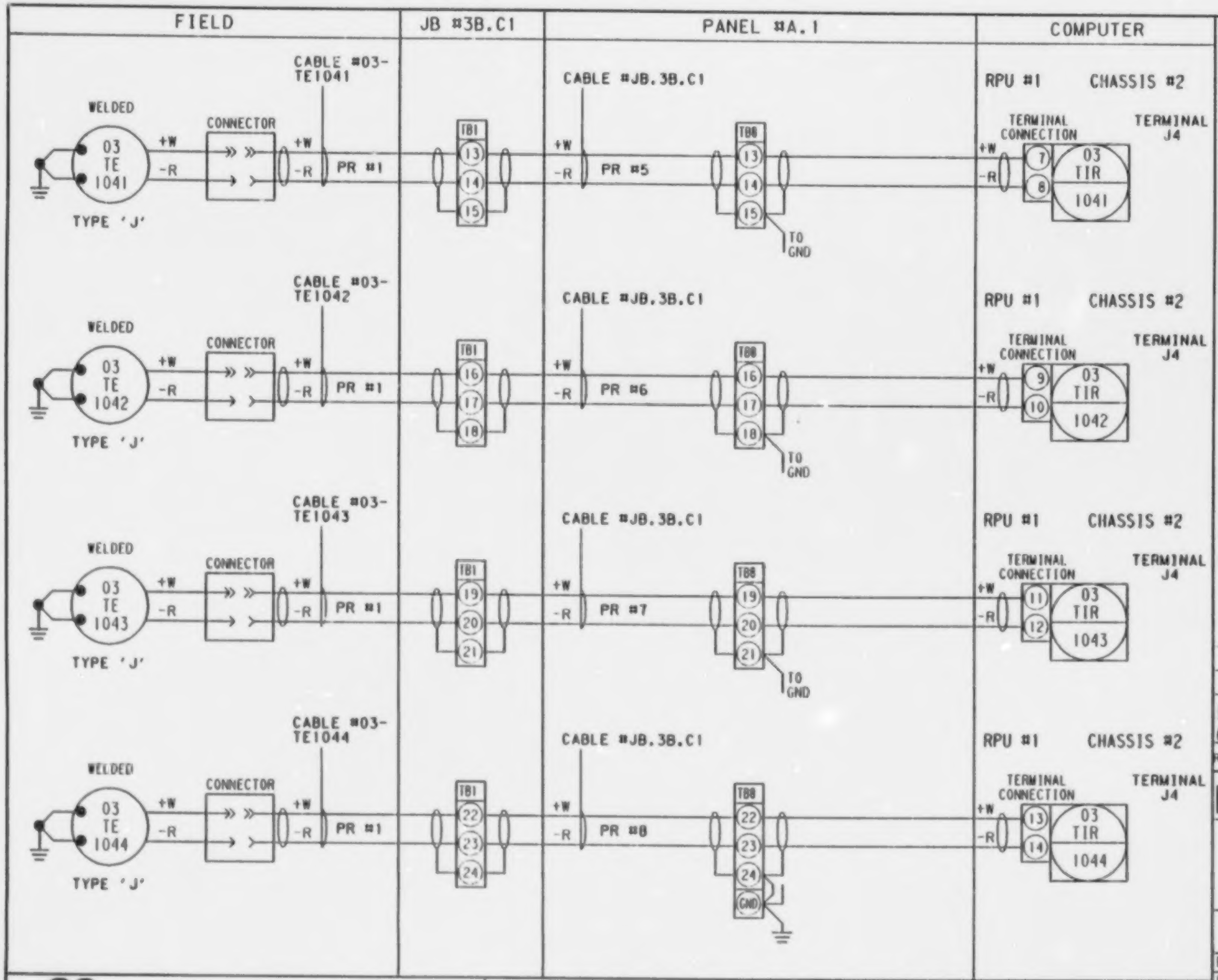

NOTES:

GENERAL NOTES:

A. 24 VAC Power Supply from GFC, Hammond Series Power Supply in panel.

B. 4-20mA signals to computer are shunted by EMR with a resistor to provide voltage signal to computer card.

C. Compatibility of voltage signals to computer programmed by EMR.

REV	DATE	DESCRIPTION	CHK	MEC APP	EMR APP
01	86.09	M.1 FINAL			
0	86.07.14	FOR EMR APPROVAL			✓

Energy, Mines and Resources Canada / Énergie, Mines et Ressources Canada

LOOP DIAGRAM
03-T-1041/1042/1043/1044
AREA 3
REACTOR AND SAMPLING SYSTEM

EMR COPROCESSING PILOT PLANT
PP3

PID No.		D-3-3 -MP-1	
DRAWN	CAD	DATE	86.06.11
CHKD			REV
DESIGN			01

Monenco Consultants Limited

WORK ORDER No. DSS 8279-3

REG. No. 203908

LOOP1

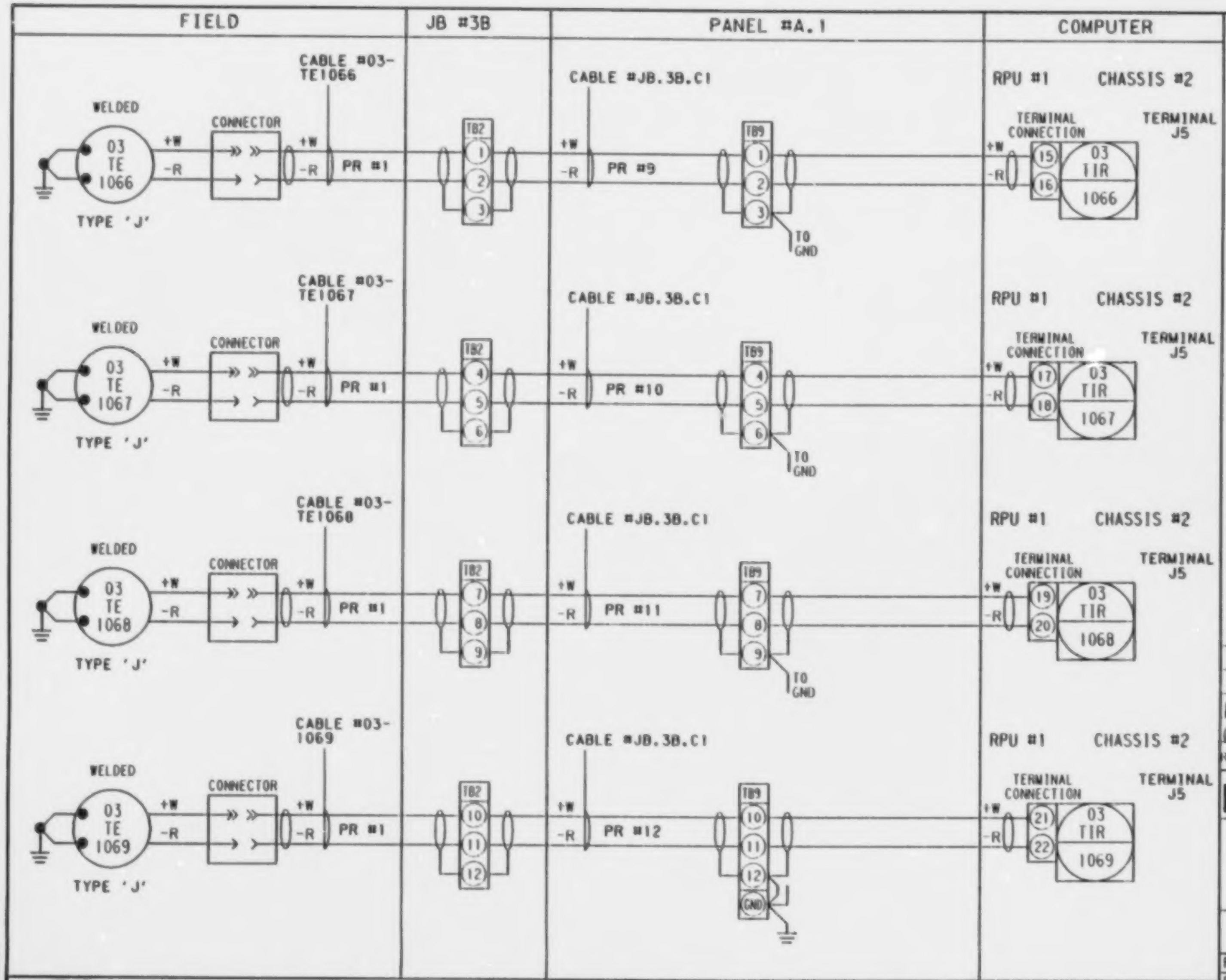

NOTES:

GENERAL NOTES:

A. 24 VAC Power Supply from GFC, Hammond Series Power Supply in panel.

B. 4-20mA signals to computer are shunted by EMR with a resistor to provide voltage signal to computer card.

C. Compatibility of voltage signals to computer programmed by EMR.

REV	DATE	DESCRIPTION	CHK	MEC APP	EMR APP
01	86.09	PH.1 FINAL	CP	GAP	
00	86.07.14	FOR EMR APPROVAL	RAJ		✓

Energy, Mines and Resources Canada — Énergie, Mines et Ressources Canada

LOOP DIAGRAM
03-T-1066/1067/1068/1069
AREA 3
REACTOR AND SAMPLING SYSTEM

EMR COPROCESSING PILOT PLANT
PP3

PID No.	D-3-3 -MP-2
DRAWN	CAD
DATE	86.06.11
CHKD	
DESIGN	
REV	01

Monenco Consultants Limited

WORK ORDER No. DSS 8279-3

REG. No. 203909

LOOP1

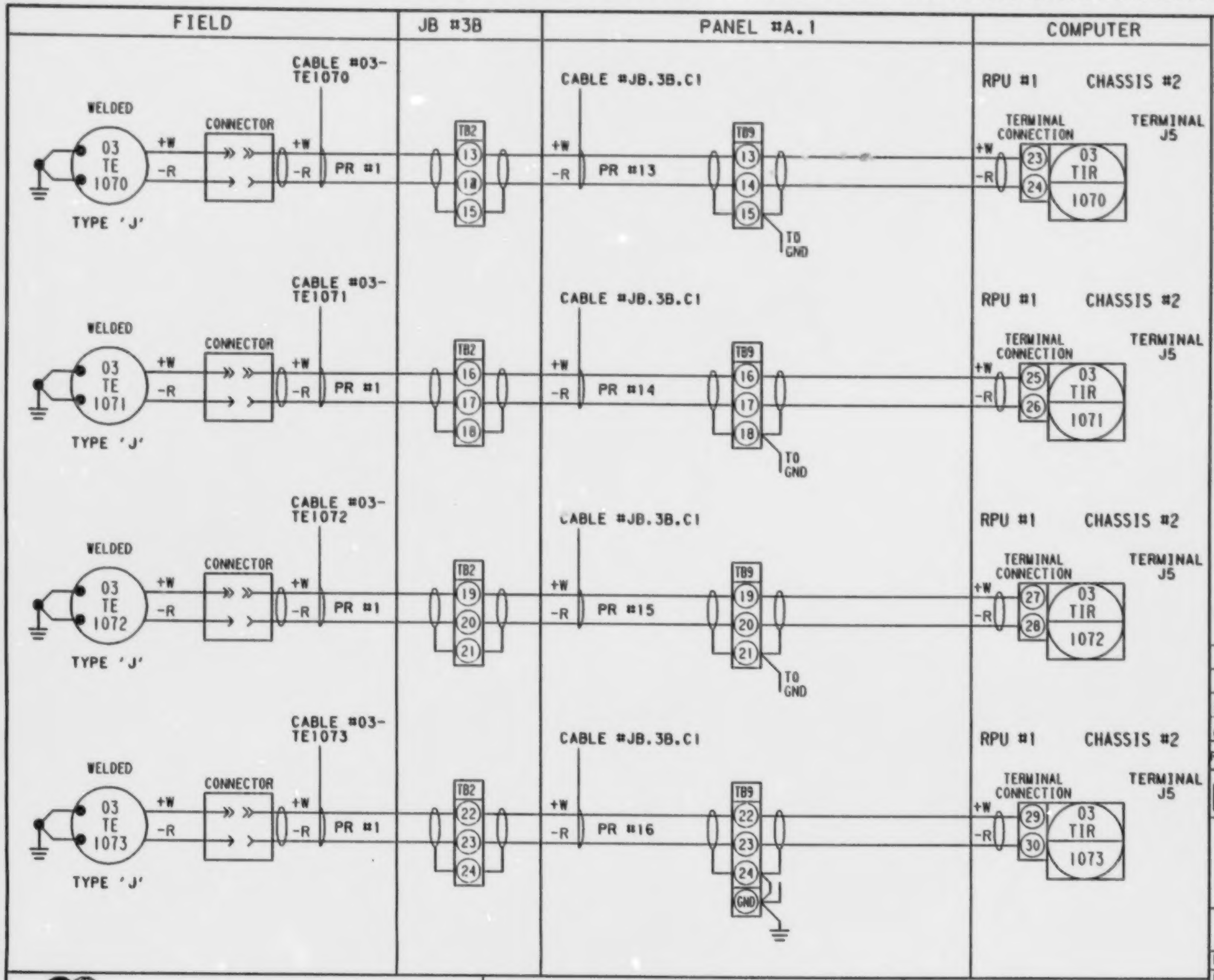

NOTES:

GENERAL NOTES:

A. 24 VAC Power Supply from GFC, Hammond Series Power Supply in panel.

B. 4-20mA signals to computer are shunted by EMR with a resistor to provide voltage signal to computer card.

C. Compatibility of voltage signals to computer programmed by EMR.

REV	DATE	DESCRIPTION	CHK	MEC APP	EMR APP
01	86.09	PH.I FINAL			
00	86.07.14	FOR EMR APPROVAL			✓

Energy, Mines and Resources Canada / Énergie, Mines et Ressources Canada

LOOP DIAGRAM
03-T-1070/1071/1072/1073
AREA 3
REACTOR AND SAMPLING SYSTEM

EMR COPROCESSING PILOT PLANT PP3

PID No.	D-3-3 -MP-2	
DRAWN	CAD	DATE 86.06.11
CHKD		REV 01
DESIGN		

Monenco Consultants Limited

WORK ORDER No. DSS 8279-3

REG. No. 203910

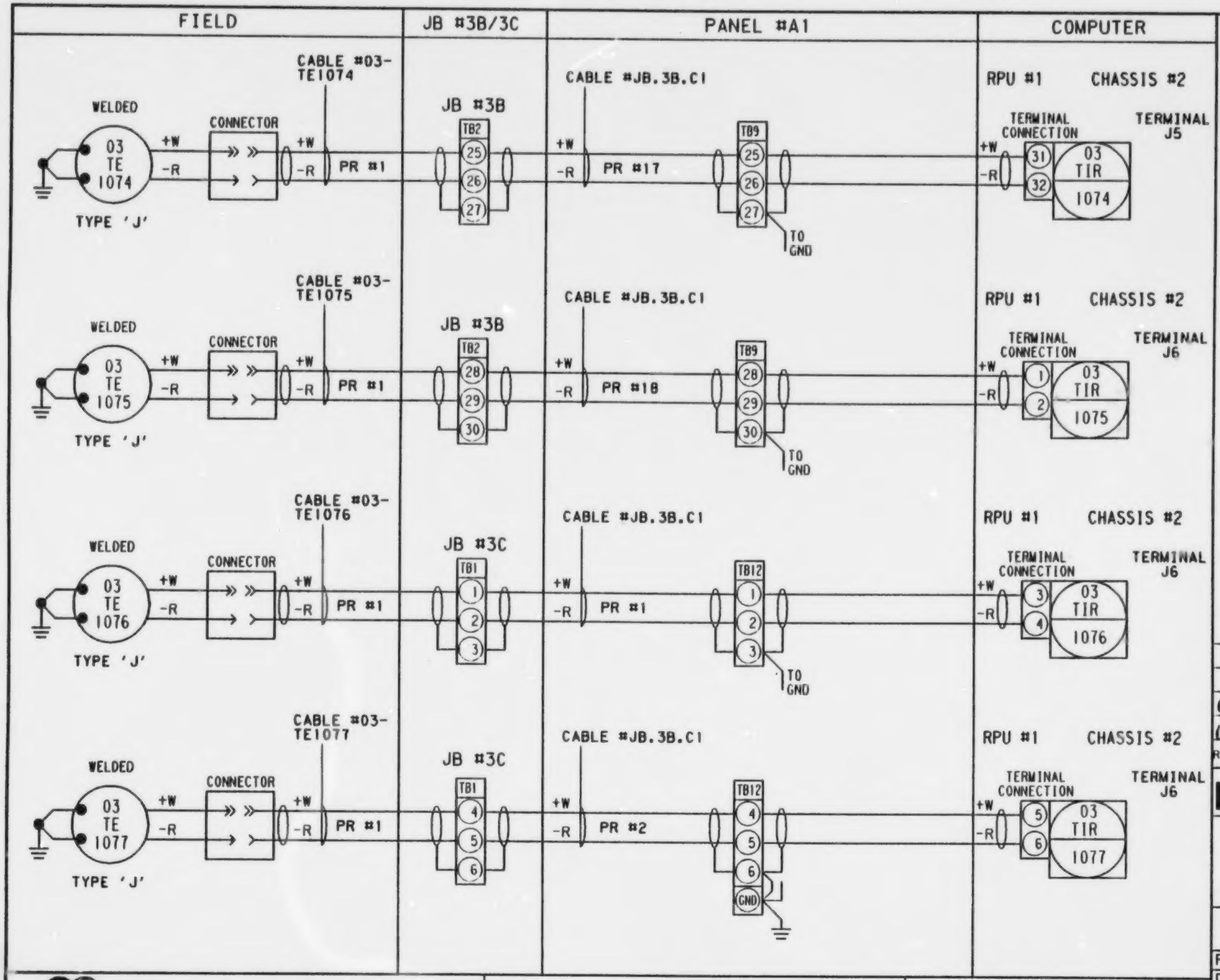

NOTES:

GENERAL NOTES:

A. 24 VAC Power Supply from GFC, Hammond Series Power Supply in panel.

B. 4-20mA signals to computer are shunted by EMR with a resistor to provide voltage signal to computer card.

C. Compatibility of voltage signals to computer programmed by EMR.

REV	DATE	DESCRIPTION	CHK	MEC APP	EMR APP
01	86.09	PH.1 FINAL			
(1)	86.07.14	FOR EMR APPROVAL	RAV		✓

Energy, Mines and Resources Canada — Énergie, Mines et Ressources Canada

LOOP DIAGRAM
03-T-1074/1075/1076/1077
AREA 3
REACTOR AND SAMPLING SYSTEM

EMR COPROCESSING PILOT PLANT
PP3

PID No.	D-3-3 -MP-2		
DRAWN	CAD	DATE	86.06.11
CHKD			REV
DESIGN			01

Monenco Consultants Limited | WORK ORDER No. DSS 8279-3 | REG. No. 203911

LOOP1

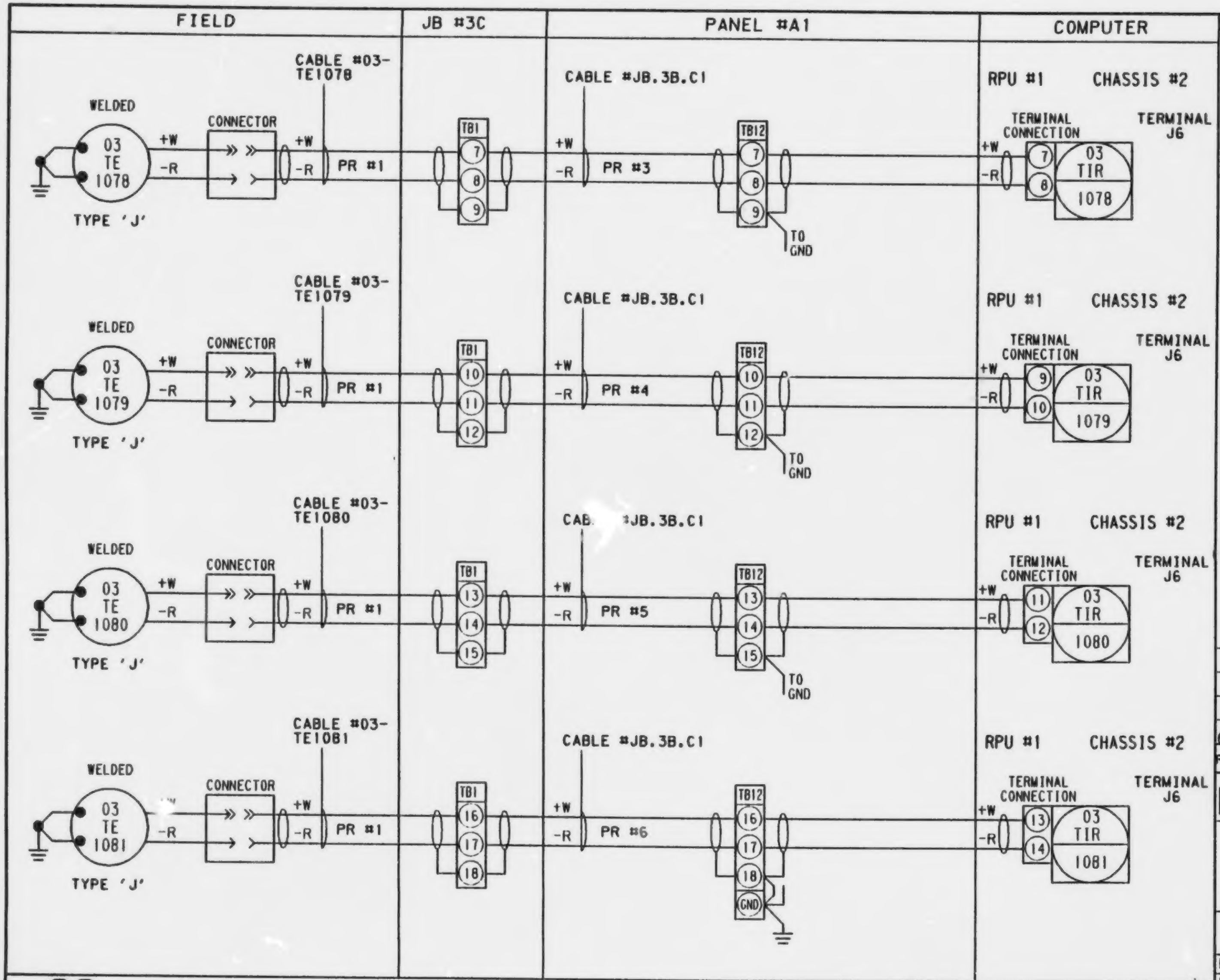

NOTES:

GENERAL NOTES:

A. 24 VAC Power Supply from GFC, Hammond Series Power Supply in panel.

B. 4-20mA signals to computer are shunted by EMR with a resistor to provide voltage signal to computer card.

C. Compatibility of voltage signals to computer programmed by EMR.

REV	DATE	DESCRIPTION	CHK	MEC APP	EMR APP
01	86.09	PH.1 FINAL	CP	WR	
00	86.07.14	FOR EMR APPROVAL	R/W		✓

Energy, Mines and Resources Canada — Énergie, Mines et Ressources Canada

LOOP DIAGRAM
03-T-1078/1079/1080/1081
AREA 3
REACTOR AND SAMPLING SYSTEM

EMR COPROCESSING PILOT PLANT PP3

PID No.		D-3-3 -MP-2	
DRAWN	CAD	DATE	86.06.11
CHKD			REV
DESIGN			01

Monenco Consultants Limited

WORK ORDER No. DSS 8279-3

REG. No. 203912

LOOP1

B

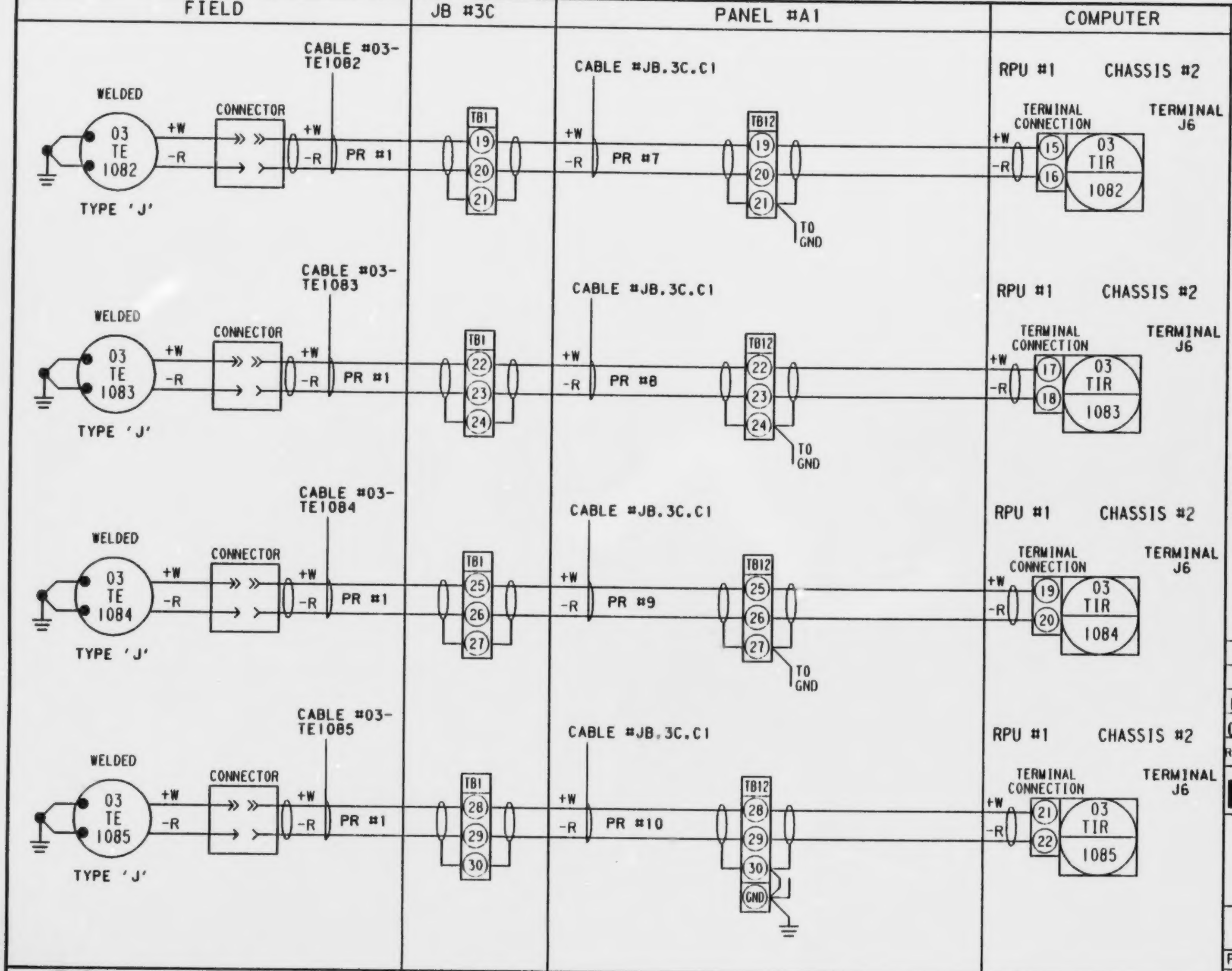

NOTES:

GENERAL NOTES:

A. 24 VAC Power Supply from GFC, Hammond Series Power Supply in panel.

B. 4-20mA signals to computer are shunted by EMR with a resistor to provide voltage signal to computer card.

C. Compatibility of voltage signals to computer programmed by EMR.

REV	DATE	DESCRIPTION	CHK	MEC APP	EMR APP
01	86.09	PH.I FINAL	CP	WR	
00	86.07.14	FOR EMR APPROVAL	PR		✓

Energy, Mines and Resources Canada — Énergie, Mines et Ressources Canada

LOOP DIAGRAM
03-T-1082/1083/1084/1085
AREA 3
REACTOR AND SAMPLING SYSTEM

EMR COPROCESSING PILOT PLANT PP3

PID No.		D-3-3 -MP-2	
DRAWN	CAD	DATE	86.06.11
CHKD			REV
DESIGN			01

Monenco Consultants Limited | WORK ORDER No. DSS 8279-3 | REG. No. 203913

LOOP1

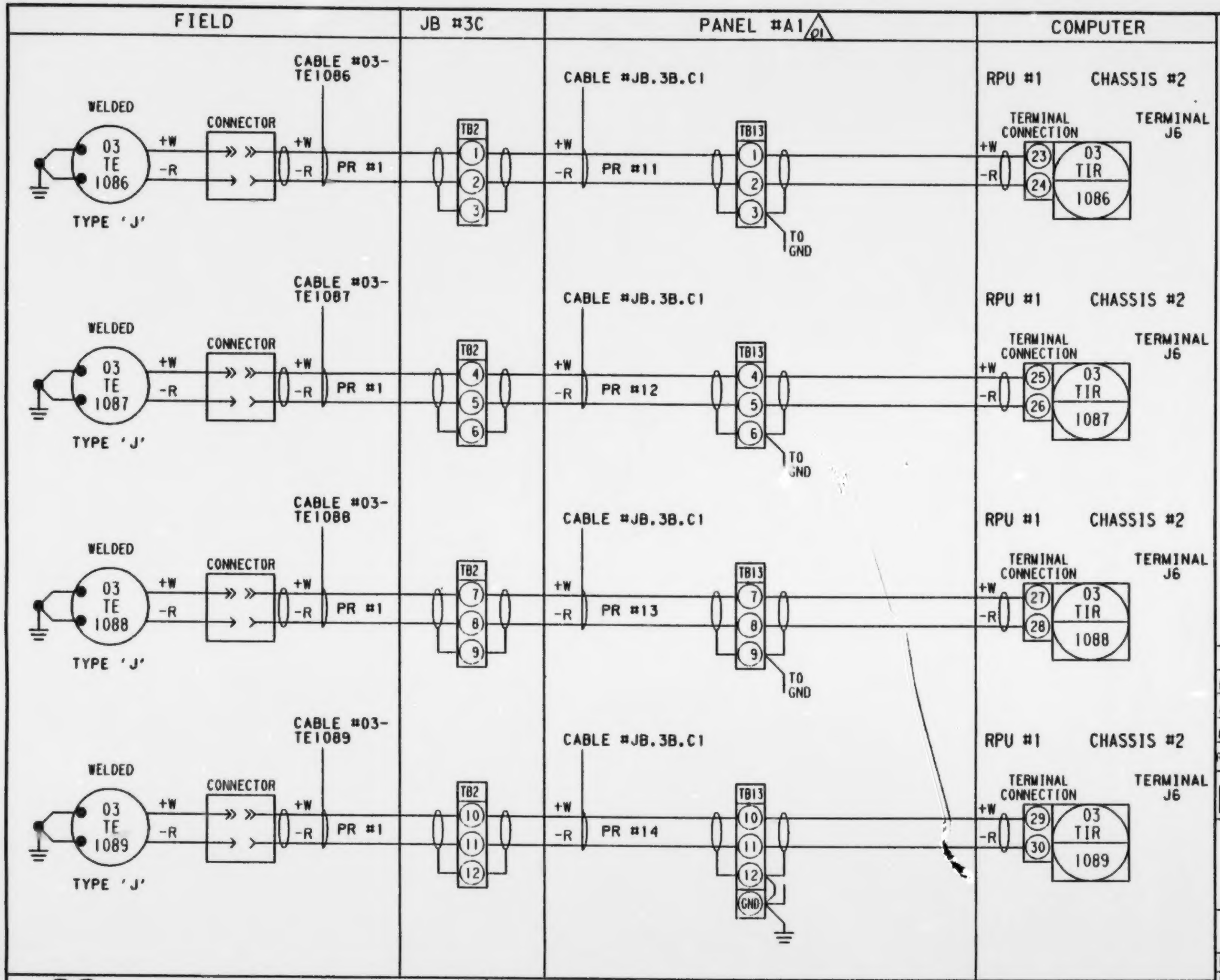

NOTES:

GENERAL NOTES:

A. 24 VAC Power Supply from GFC, Hammond Series Power Supply in panel.

B. 4-20mA signals to computer are shunted by EMR with a resistor to provide voltage signal to computer card.

C. Compatibility of voltage signals to computer programmed by EMR.

REV	DATE	DESCRIPTION	CHK	MEC APP	EMR APP
02	86.09	PH.I FINAL			
01	86.07.30	PANEL IDENTIFICATION ADDED	RPW		
00	86.07.14	FOR EMR APPROVAL	RPW		✓

Energy, Mines and Resources Canada — Énergie, Mines et Ressources Canada

LOOP DIAGRAM
03-T-1086/1087/1088/1089
AREA 3
REACTOR AND SAMPLING SYSTEM

EMR COPROCESSING PILOT PLANT
PP3

PID No.		D-3-3 -MP-2	
DRAWN	CAD	DATE	86.06.11
CHKD			REV
DESIGN			02

Monenco Consultants Limited

WORK ORDER No. DSS 8279-3

REG. No. 203914

LOOP1

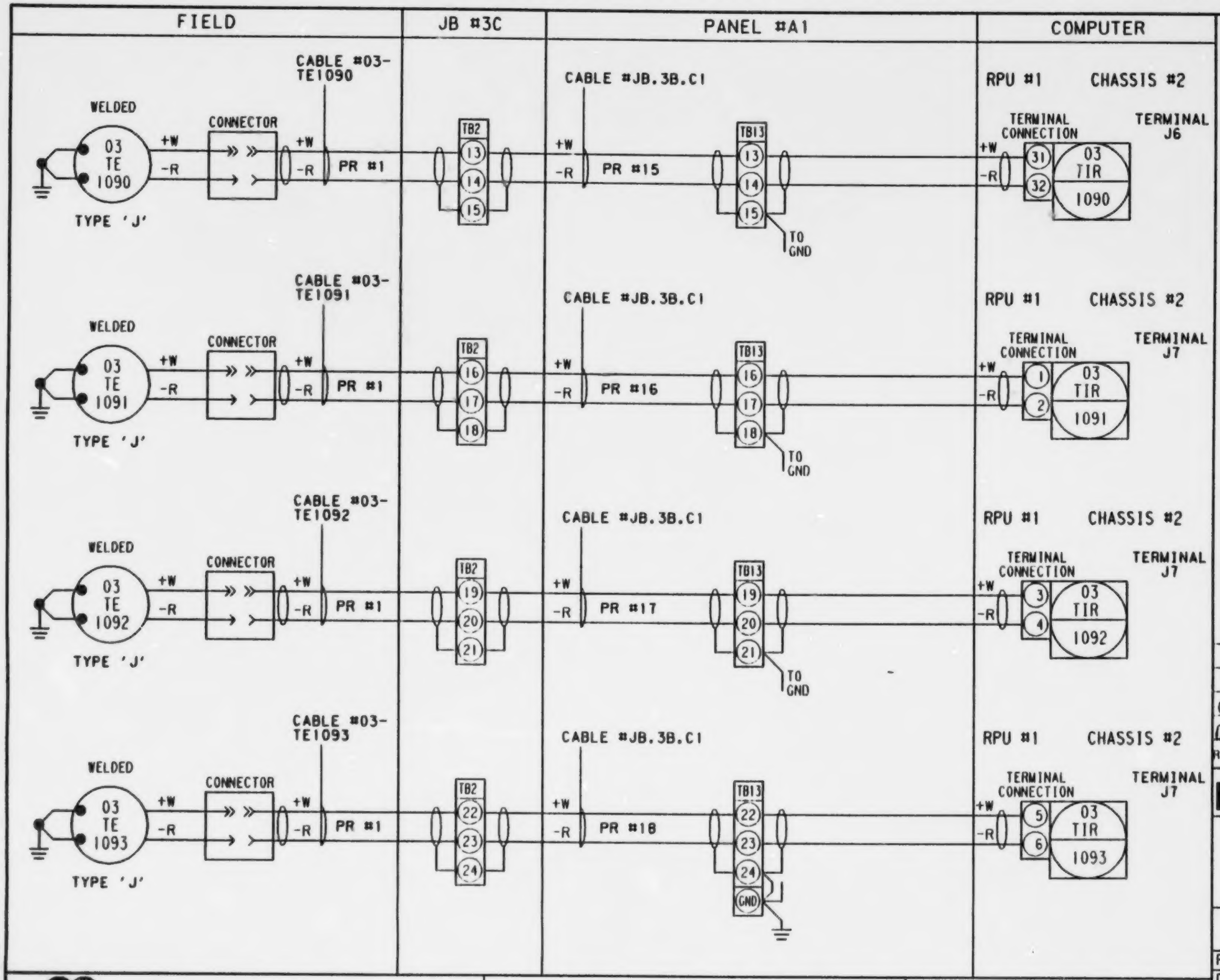

NOTES:

GENERAL NOTES:

A. 24 VAC Power Supply from GFC, Hammond Series Power Supply in panel.

B. 4-20mA signals to computer are shunted by EMR with a resistor to provide voltage signal to computer card.

C. Compatibility of voltage signals to computer programmed by EMR.

REV	DATE	DESCRIPTION	CHK	MEC APP	EMR APP
01	86.09	PH.1 FINAL			
00	86.07.14	FOR EMR APPROVAL			✓

Energy, Mines and Resources Canada — Énergie, Mines et Ressources Canada

LOOP DIAGRAM
03-T-1090/1091/1092/1093
AREA 3
REACTOR AND SAMPLING SYSTEM

EMR COPROCESSING PILOT PLANT
PP3

PID No.	D-3-3 -MP-2		
DRAWN	CAD	DATE	86.06.11
CHKD			REV
DESIGN			01

Monenco Consultants Limited

WORK ORDER No. DSS 8279-3

REG. No. 203915

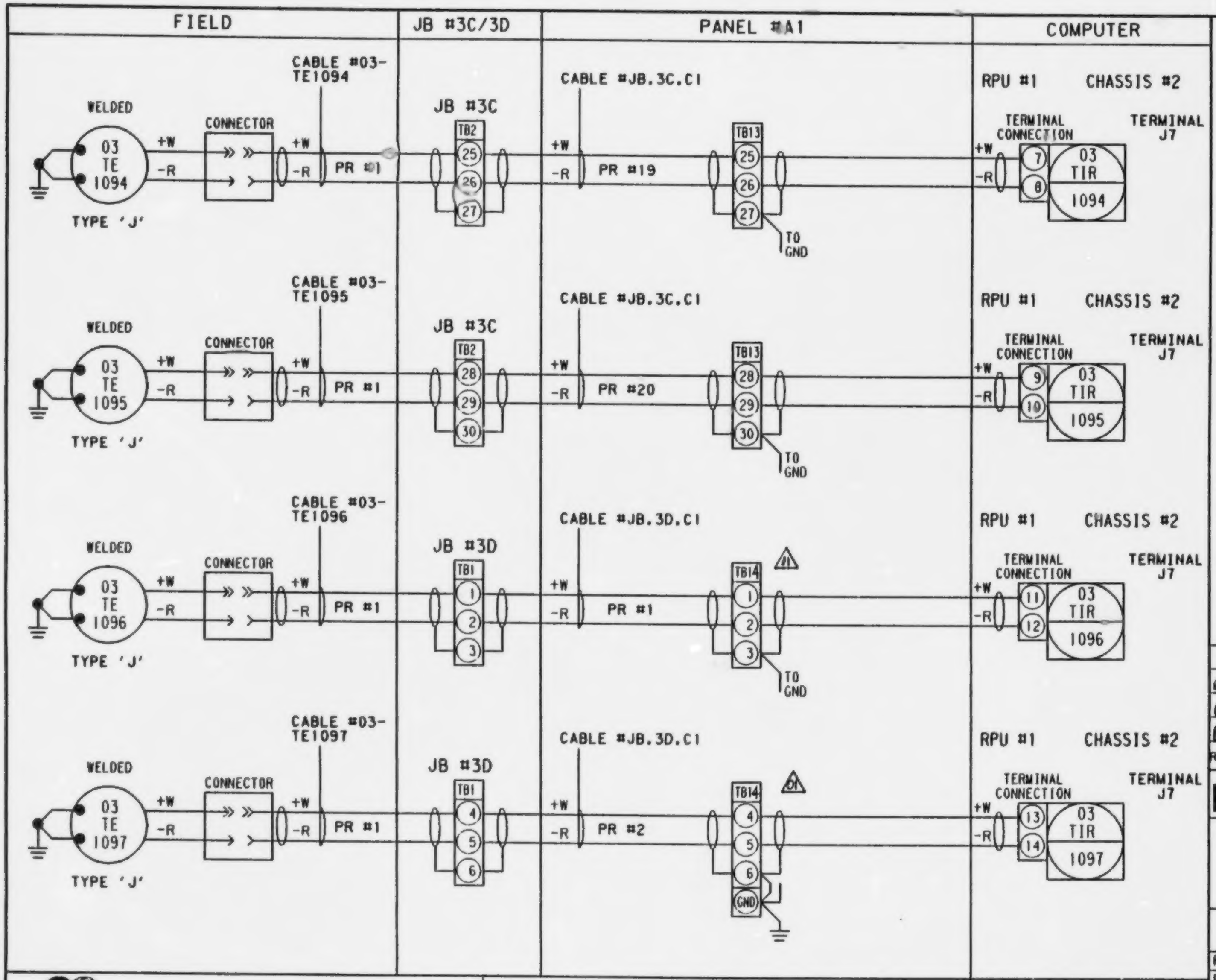

NOTES:

GENERAL NOTES:

A. 24 VAC Power Supply from GFC, Hammond Series Power Supply in panel.

B. 4-20mA signals to computer are shunted by EMR with a resistor to provide voltage signal to computer card.

C. Compatibility of voltage signals to computer programmed by EMR.

REV	DATE	DESCRIPTION	CHK	MEC APP	EMR APP
02	86.09	PH.1 FINAL	CP	AMP	
01	86.08.21	TERMINAL BLOCK #	CP		
00	86.07.14	FOR EMR APPROVAL	RPW		✓

Energy, Mines and Resources Canada — Énergie, Mines et Ressources Canada

LOOP DIAGRAM
03-T-1094/1095/1096/1097
AREA 3
REACTOR AND SAMPLING SYSTEM

EMR COPROCESSING PILOT PLANT PP3

PID No.	D-3-3 -MP-2		
DRAWN	CAD	DATE	86.06.11
CHKD			REV
DESIGN			02

Monenco Consultants Limited | WORK ORDER No. DSS 8279-3 | REG. No. 203916

LOOP1

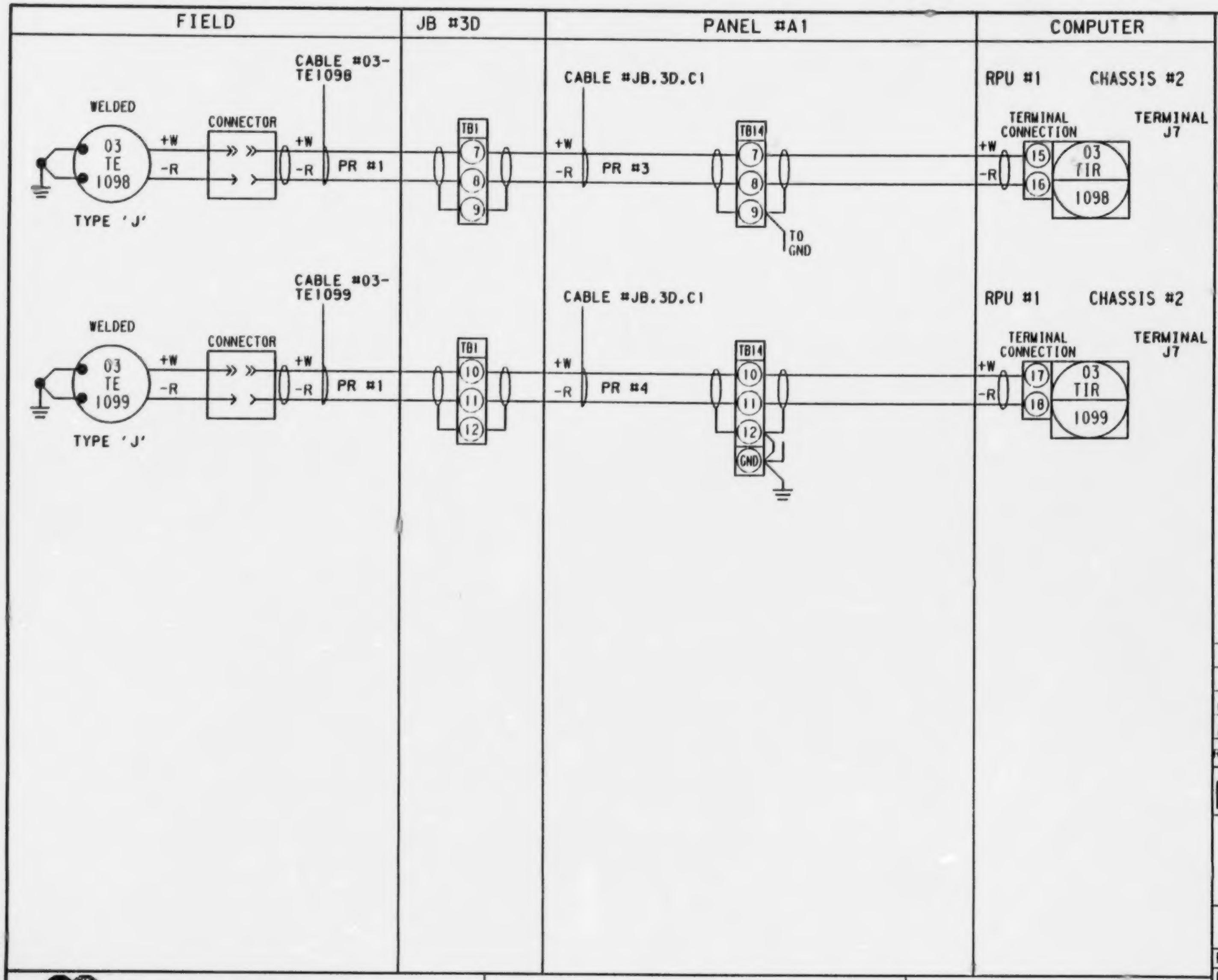

NOTES:

GENERAL NOTES:

A. 24 VAC Power Supply from GFC, Hammond Series Power Supply in panel.

B. 4-20mA signals to computer are shunted by EMR with a resistor to provide voltage signal to computer card.

C. Compatibility of voltage signals to computer programmed by EMR.

REV	DATE	DESCRIPTION	CHK	MEC APP	EMR APP
01	86.09	PH.1 FINAL	CP	GAP	
00	86.07.14	FOR EMR APPROVAL	RW		✓

Energy, Mines and Resources Canada — Énergie, Mines et Ressources Canada

LOOP DIAGRAM
03-T-1098/1099
AREA 3
REACTOR AND SAMPLING SYSTEM

EMR COPROCESSING PILOT PLANT PP3

PID No.	D-3-3 -MP-2	
DRAWN	CAD	DATE 86.06.11
CHKD		REV 01
DESIGN		

Monenco Consultants Limited

WORK ORDER No. DSS 8279-3

REG. No. 203917

LOOP1

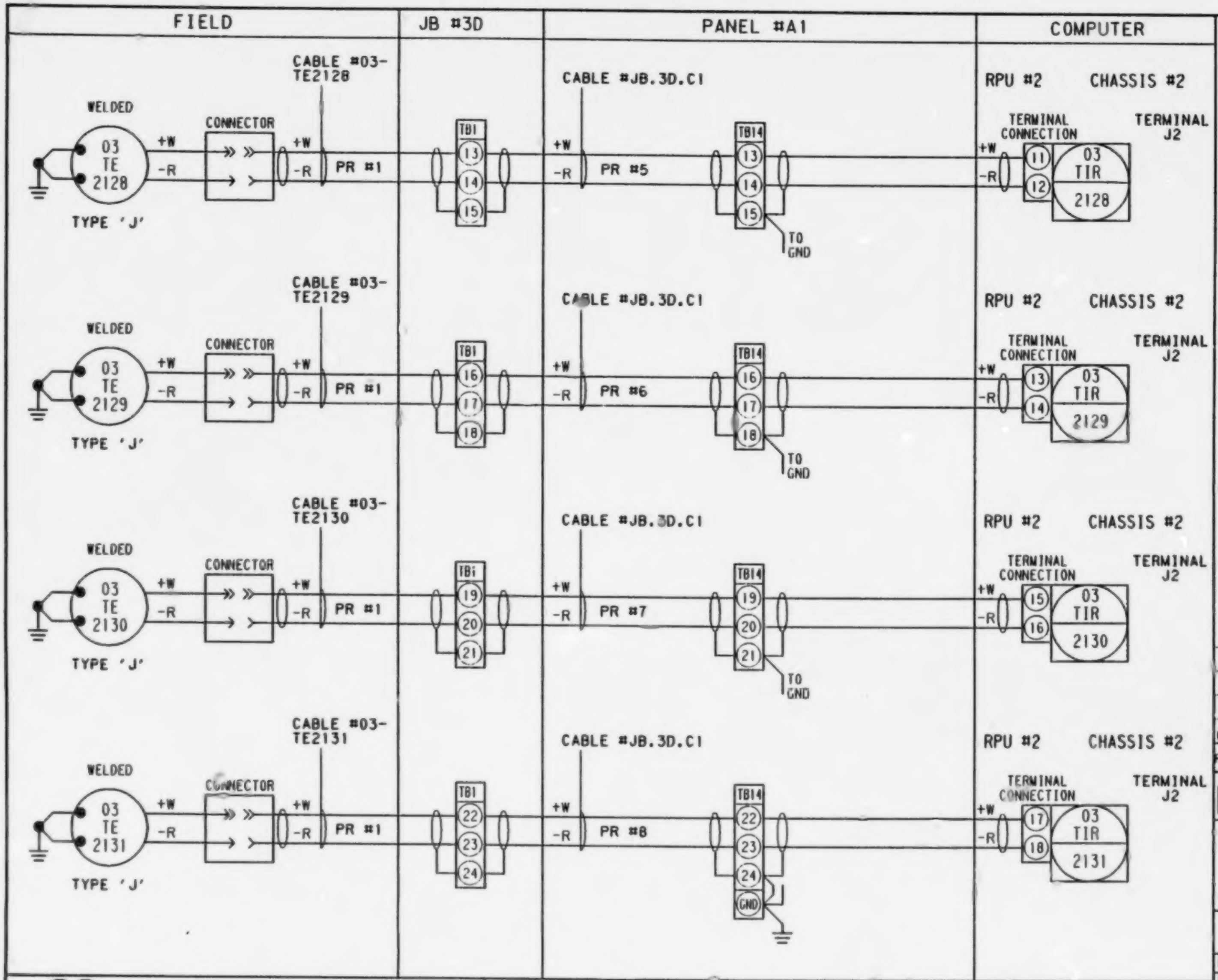

NOTES:

GENERAL NOTES:

A. 24 VAC Power Supply from GFC, Hammond Series Power Supply in panel.

B. 4-20mA signals to computer are shunted by EMR with a resistor to provide voltage signal to computer card.

C. Compatibility of voltage signals to computer programmed by EMR.

REV	DATE	DESCRIPTION	CHK	MEC APP	EMR APP
01	86.09	PH.1 FINAL			
00	86.07.14	FOR EMR APPROVAL			✓

Energy, Mines and Resources Canada — Énergie, Mines et Ressources Canada

LOOP DIAGRAM
03-T-2128/2129/2130/2131
AREA 3
REACTOR AND SAMPLING SYSTEM

EMR COPROCESSING PILOT PLANT
PP3

PID No.	D-3-3 -MP-2
DRAWN	CAD
DATE	86.06.11
CHKD	
DESIGN	
REV	01

Monenco Consultants Limited

WORK ORDER No. DSS 8279-3

REG. No. 203918

LOOP1

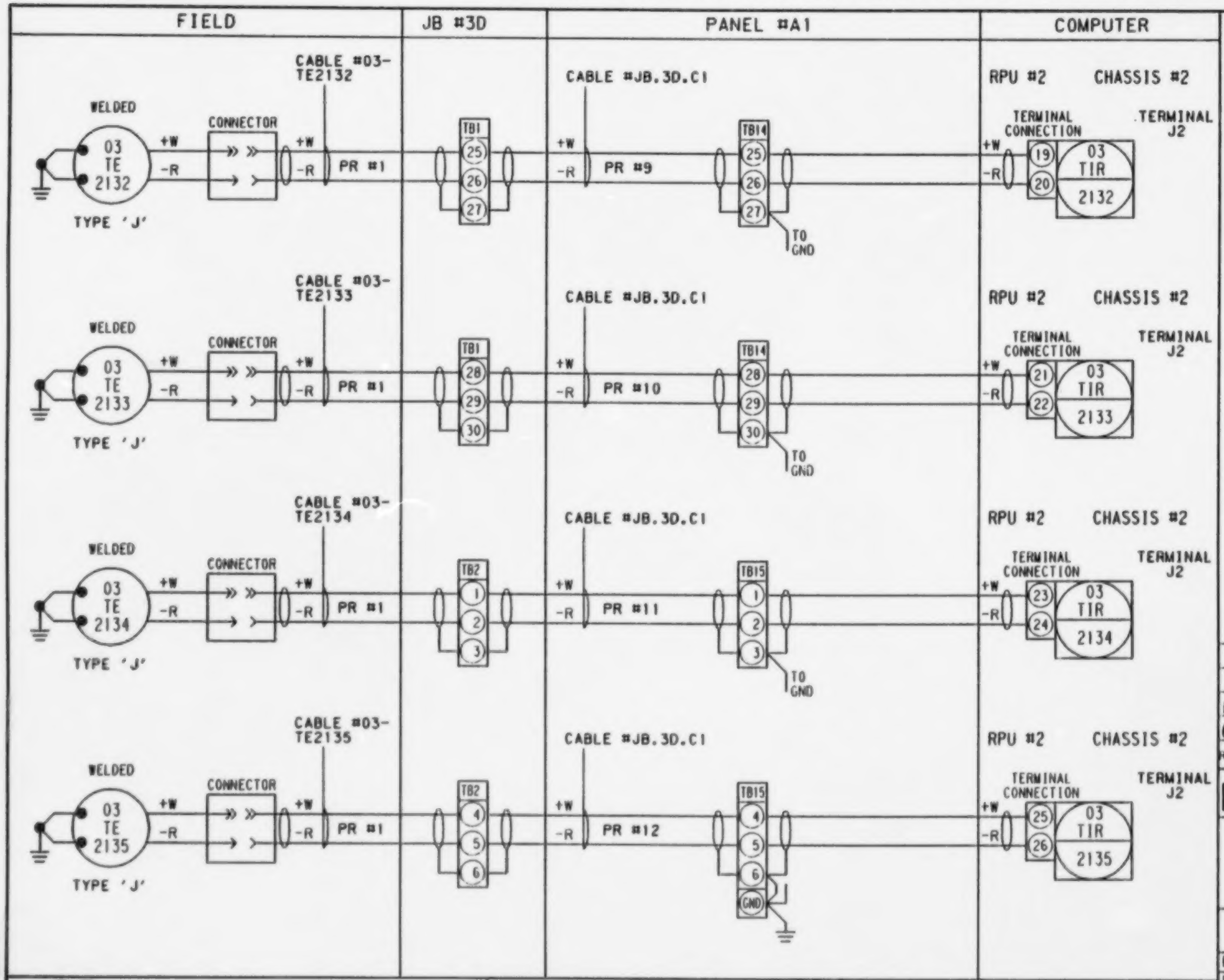

NOTES:

GENERAL NOTES:

A. 24 VAC Power Supply from GFC, Hammond Series Power Supply in panel.

B. 4-20mA signals to computer are shunted by EMR with a resistor to provide voltage signal to computer card.

C. Compatibility of voltage signals to computer programmed by EMR.

REV	DATE	DESCRIPTION	CHK	MEC APP	EMR APP
01	86.09	PH.1 FINAL	OP	WAP	
00	86.07.14	FOR EMR APPROVAL	RAJ		✓

Energy, Mines and Resources Canada — Énergie, Mines et Ressources Canada

LOOP DIAGRAM
03-T-2132/2133/2134/2135
AREA 3
REACTOR AND SAMPLING SYSTEM

EMR COPROCESSING PILOT PLANT
PP3

PID No.	D-3-3 -MP-2		
DRAWN	CAD	DATE	86.06.11
CHKD		REV	01
DESIGN			

Monenco Consultants Limited

WORK ORDER No. DSS 8279-3

REG. No. 203919

LOOP1

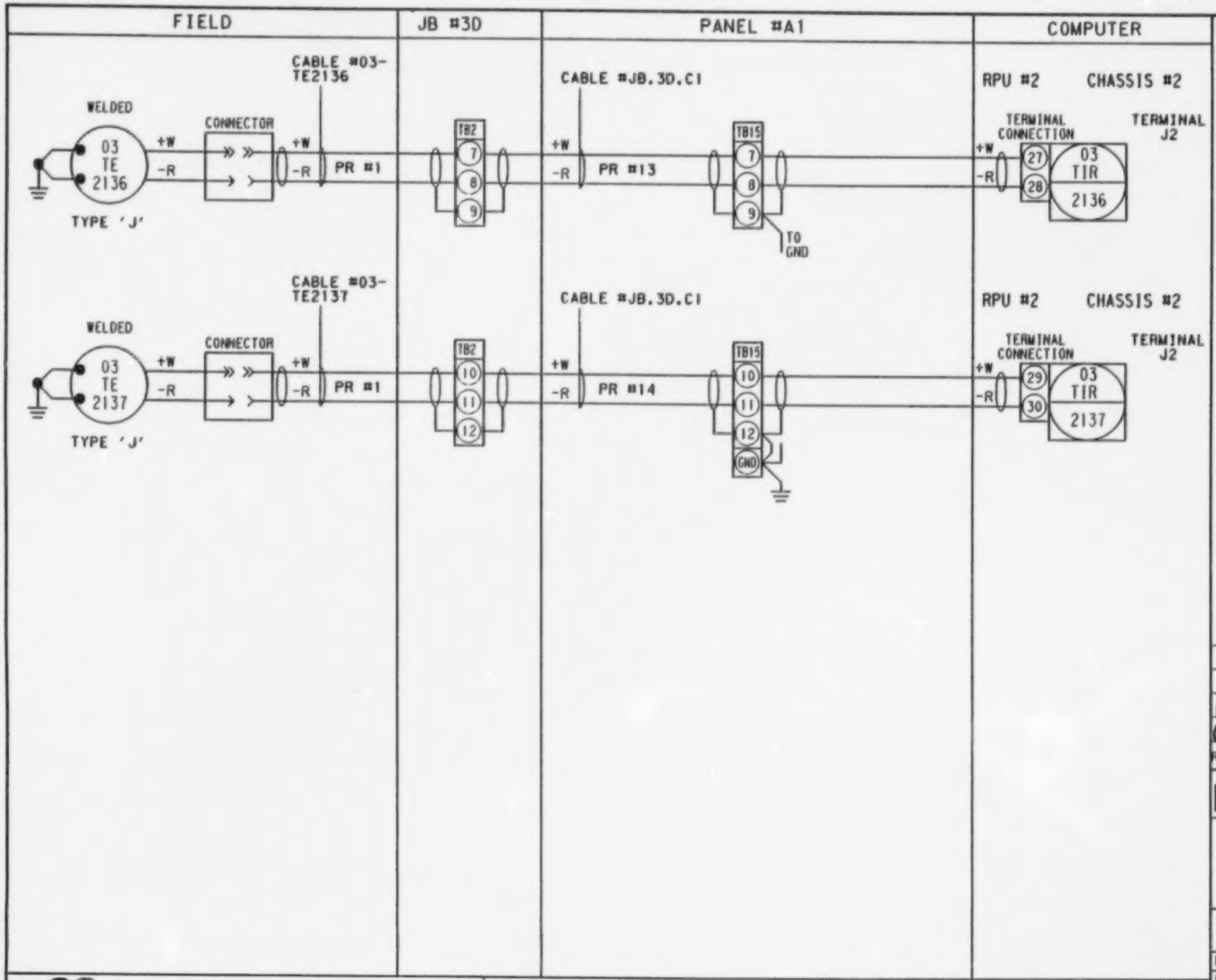

NOTES:

GENERAL NOTES:

A. 24 VAC Power Supply from GFC, Hammond Series Power Supply in panel.

B. 4-20mA signals to computer are shunted by EMR with a resistor to provide voltage signal to computer card.

C. Compatibility of voltage signals to computer programmed by EMR.

REV	DATE	DESCRIPTION	CHK	MEC APP	EMR APP
01	86.09	PH.1 FINAL	CP	WP	
00	86.07.14	FOR EMR APPROVAL	PA/		✓

Energy, Mines and Resources Canada — Énergie, Mines et Ressources Canada

LOOP DIAGRAM
03-T-2136/2137
AREA 3
REACTOR AND SAMPLING SYSTEM

EMR COPROCESSING PILOT PLANT PP3

PID No.	D-3-3 -MP-2		
DRAWN	CAD	DATE	86.06.11
CHKD			REV
DESIGN			0 II

Monenco Consultants Limited

WORK ORDER No. DSS 8279-3

REG. No. 203920

LOOP1

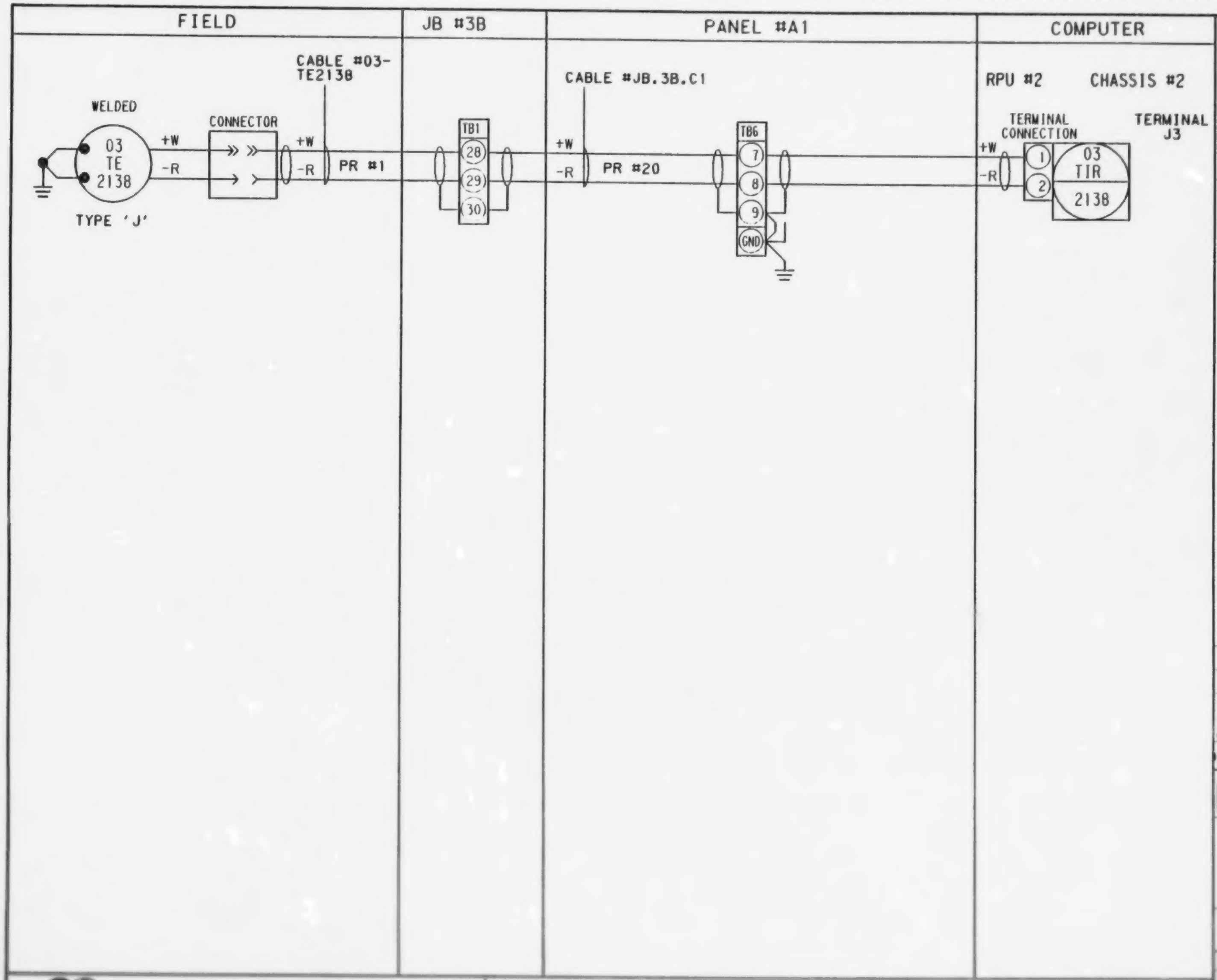

NOTES:

GENERAL NOTES:

A. 24 VAC Power Supply from GFC, Hammond Series Power Supply in panel.

B. 4-20mA signals to computer are shunted by EMR with a resistor to provide voltage signal to computer card.

C. Compatibility of voltage signals to computer programmed by EMR.

REV	DATE	DESCRIPTION	CHK	MEC APP	EMR APP
01	86.09	PH.1 FINAL	OP	WAP	
00	86.07.14	FOR EMR APPROVAL	RPW		✓

Energy, Mines and Resources Canada / Énergie, Mines et Ressources Canada

LOOP DIAGRAM
03-T-2138
AREA 3
REACTOR AND SAMPLING SYSTEM

EMR COPROCESSING PILOT PLANT
PP3

PID No. D-3-3 -MP-2
DRAWN CAD DATE 86.06.1
CHKD REV
DESIGN 01

Monenco Consultants Limited | WORK ORDER No. DSS 8279-3 | REG. No. 203998

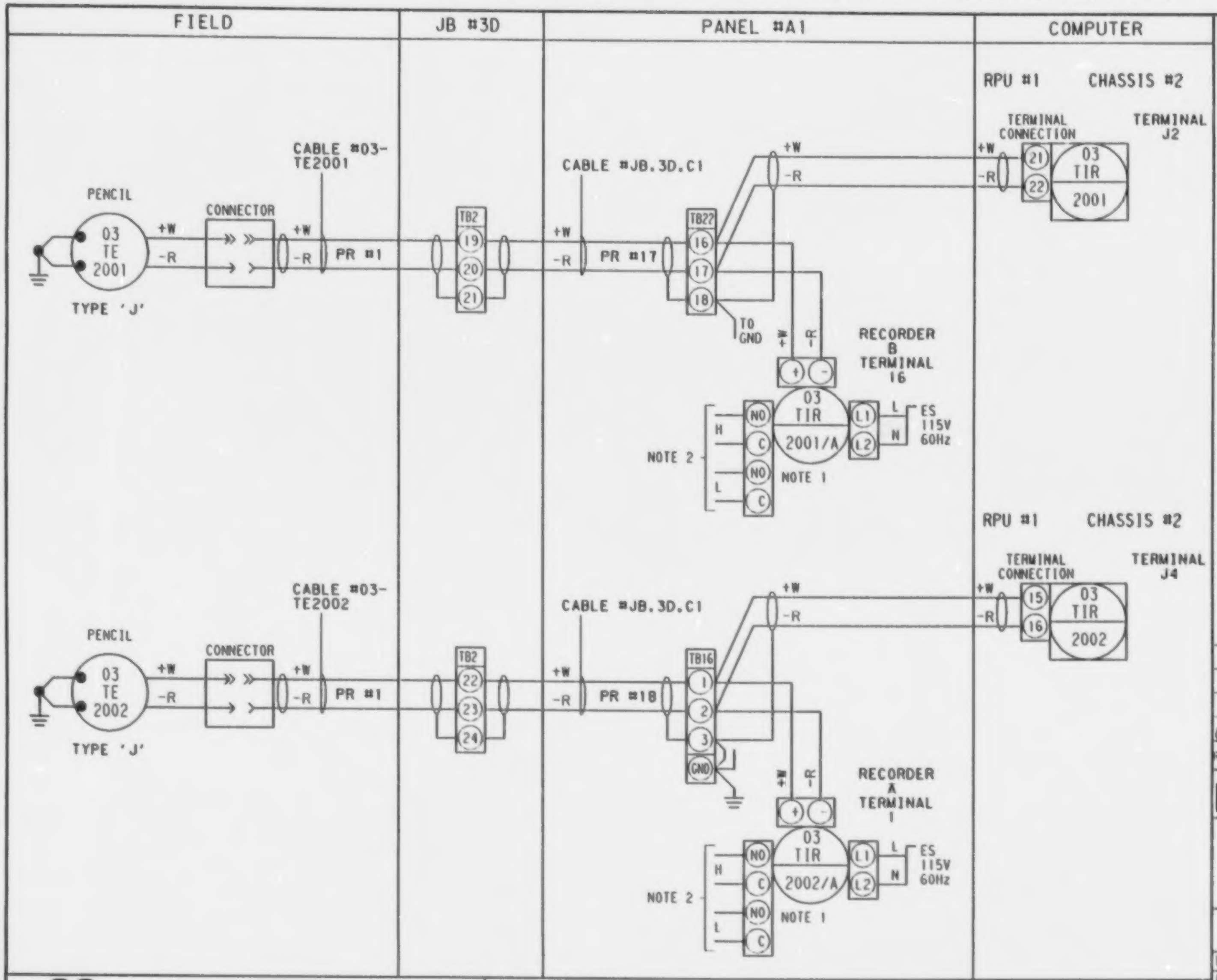

NOTES:
1. POINT-ON "YEW" MULTIPOINT RECORDER.
2. ALARM-WIRED TO COMMON PANEL ALARM. ONE SET OF ALARM CONTACTS PER RECORDER ARE COMMON TO ALL POINTS.

GENERAL NOTES:

A. 24 VAC Power Supply from GFC, Hammond Series Power Supply in panel.

B. 4-20mA signals to computer are shunted by EMR with a resistor to provide voltage signal to computer card.

C. Compatibility of voltage signals to computer programmed by EMR.

REV	DATE	DESCRIPTION	CHK	MEC APP	EMR APP
01	86.09	PH.I FINAL	WP	WP	
00	86.07.14	FOR EMR APPROVAL	RN		✓

Energy, Mines and Resources Canada — Énergie, Mines et Ressources Canada

LOOP DIAGRAM
03-T-2001/2002
AREA 3
REACTOR &SAMPLING SYSTEM

EMR COPROCESSING PILOT PLANT
PP3

PID No.	D-3-3 -MP-1
DRAWN	CAD
DATE	86.06.13
CHKD	
DESIGN	
REV	01

Monenco Consultants Limited

WORK ORDER No. DSS 8279-3

REG. No. 203927

LOOP12

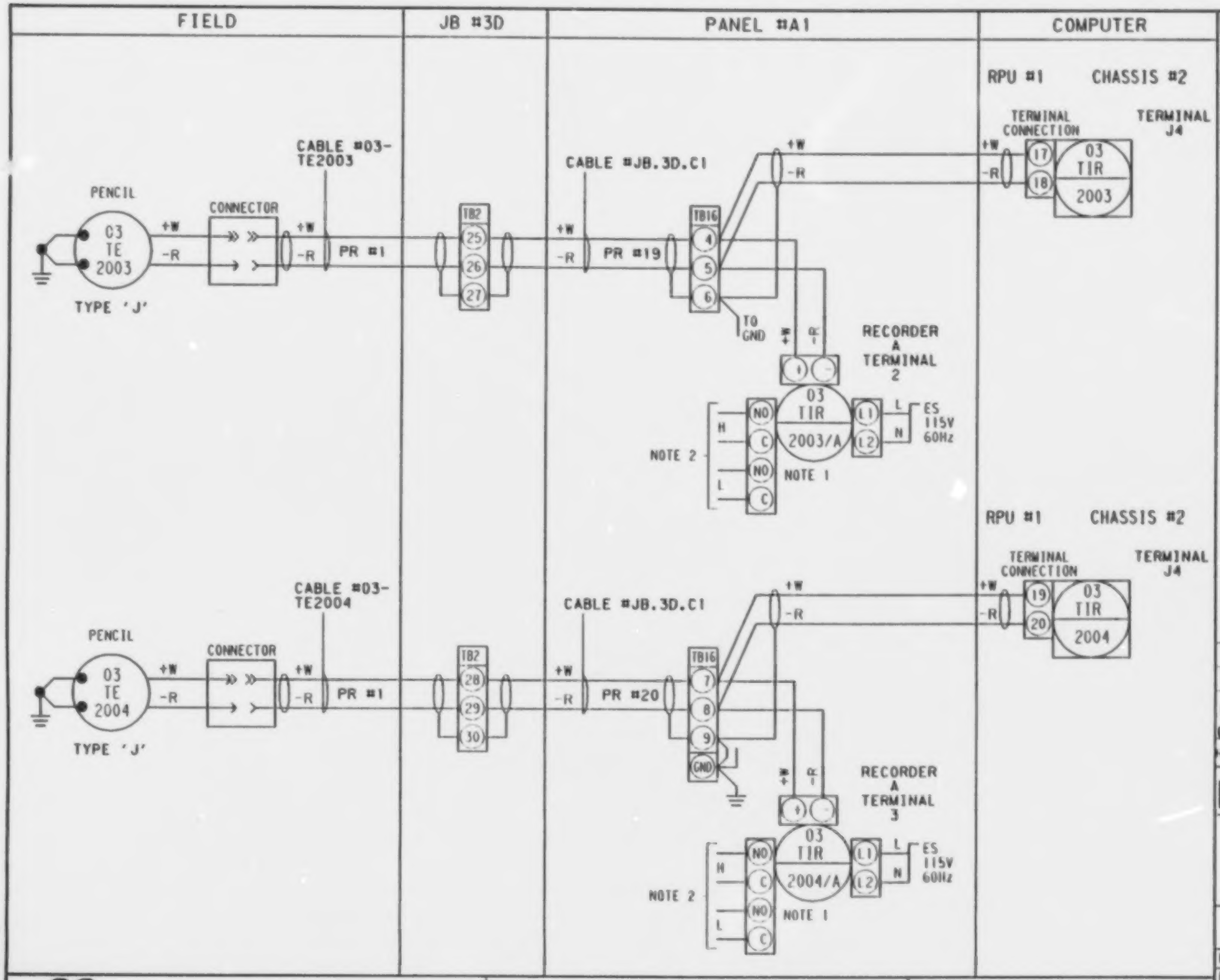

NOTES:

1. POINT-ON "YEW" MULTIPOINT RECORDER.
2. ALARM-WIRED TO COMMON PANEL ALARM. ONE SET OF ALARM CONTACTS PER RECORDER ARE COMMON TO ALL POINTS.

GENERAL NOTES:

A. 24 VAC Power Supply from GFC, Hammond Series Power Supply in panel.

B. 4-20mA signals to computer are shunted by EMR with a resistor to provide voltage signal to computer card.

C. Compatibility of voltage signals to computer programmed by EMR.

REV	DATE	DESCRIPTION	CHK	MEC APP	EMR APP
01	86.09	ALL FINAL			
00	86.07.14	FOR EMR APPROVAL			✓

Energy, Mines and Resources Canada — Énergie, Mines et Ressources Canada

LOOP DIAGRAM
03-T-2003/2004
AREA 3
REACTOR AND SAMPLING SYSTEM

EMR COPROCESSING PILOT PLANT
PP3

PID No.	D-3-3 -MP-1		
DRAWN	CAD	DATE	86.06.12
CHKD		REV	01
DESIGN			

Monenco Consultants Limited

WORK ORDER No. DSS 8279-3

REG. No. 203928

LOOP12

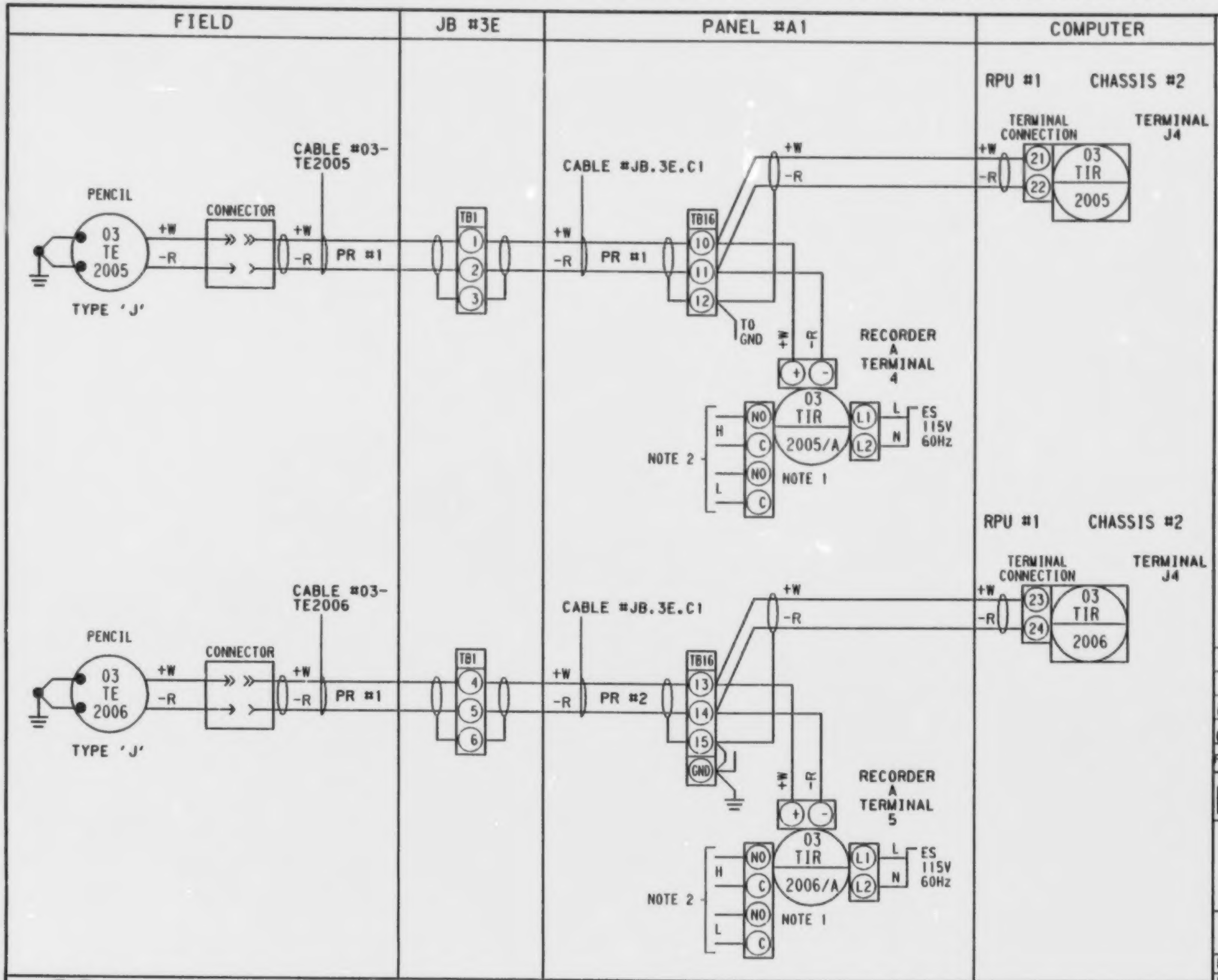

NOTES:
1. POINT-ON "YEW" MULTIPOINT RECORDER.
2. ALARM-WIRED TO COMMON PANEL ALARM. ONE SET OF ALARM CONTACTS PER RECORDER ARE COMMON TO ALL POINTS.

GENERAL NOTES:

A. 24 VAC Power Supply from GFC, Hammond Series Power Supply in panel.

B. 4-20mA signals to computer are shunted by EMR with a resistor to provide voltage signal to computer card.

C. Compatibility of voltage signals to computer programmed by EMR.

REV	DATE	DESCRIPTION	CHK	MEC APP	EMR APP
01	86.09	PH.I FINAL			
00	86.07.14	FOR EMR APPROVAL	RAJ		✓

Energy, Mines and Resources Canada — Énergie, Mines et Ressources Canada

LOOP DIAGRAM
03-T-2005/2006
AREA 3
REACTOR AND SAMPLING SYSTEM

EMR COPROCESSING PILOT PLANT
PP3

PID No.	D-3-3 -MP-1	
DRAWN	CAD	DATE 86.06.12
CHKD		REV 01
DESIGN		

Monenco Consultants Limited

WORK ORDER No. DSS 8279-3

REG. No. 203929

LOOP12

B

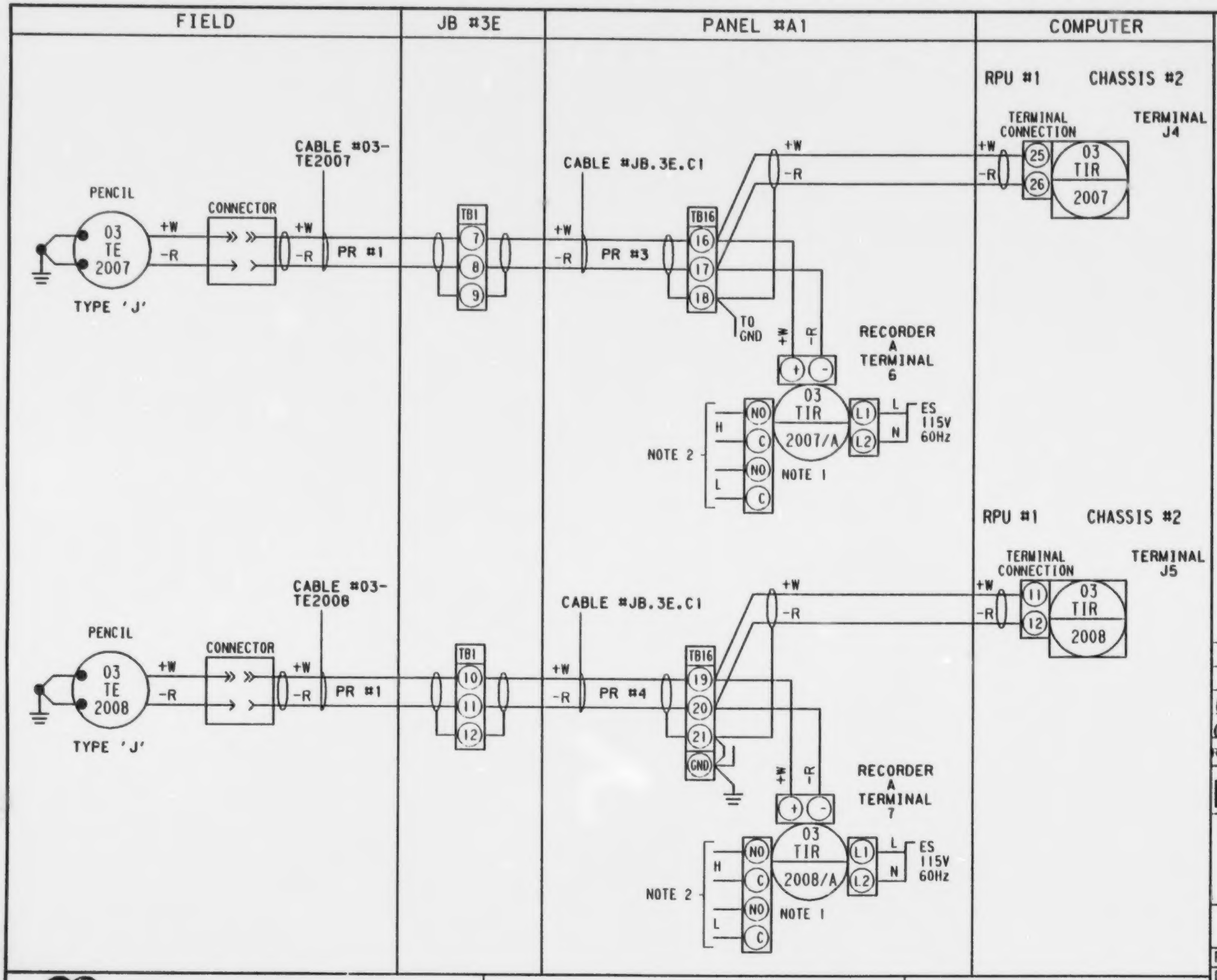

NOTES:
1. POINT-ON "YEW" MULTIPOINT RECORDER.
2. ALARM-WIRED TO COMMON PANEL ALARM. ONE SET OF ALARM CONTACTS PER RECORDER ARE COMMON TO ALL POINTS.

GENERAL NOTES:

A. 24 VAC Power Supply from GFC, Hammond Series Power Supply in panel.

B. 4-20mA signals to computer are shunted by EMR with a resistor to provide voltage signal to computer card.

C. Compatibility of voltage signals to computer programmed by EMR.

REV	DATE	DESCRIPTION	CHK	MEC APP	EMR APP
01	86.09	PH.1 FINAL	DP	WAC	
00	86.07.14	FOR EMR APPROVAL	RAW		✓

Energy, Mines and Resources Canada — Énergie, Mines et Ressources Canada

LOOP DIAGRAM
03-T-2007/2008
AREA 3
REACTOR AND SAMPLING SYSTEM

EMR COPROCESSING PILOT PLANT
PP3

PID No.	D-3-3 -MP-1		
DRAWN	CAD	DATE	86.06.12
CHKD			REV
DESIGN			01

Monenco Consultants Limited | WORK ORDER No. DSS 8279-3 | REG. No. 203930

LOOP12

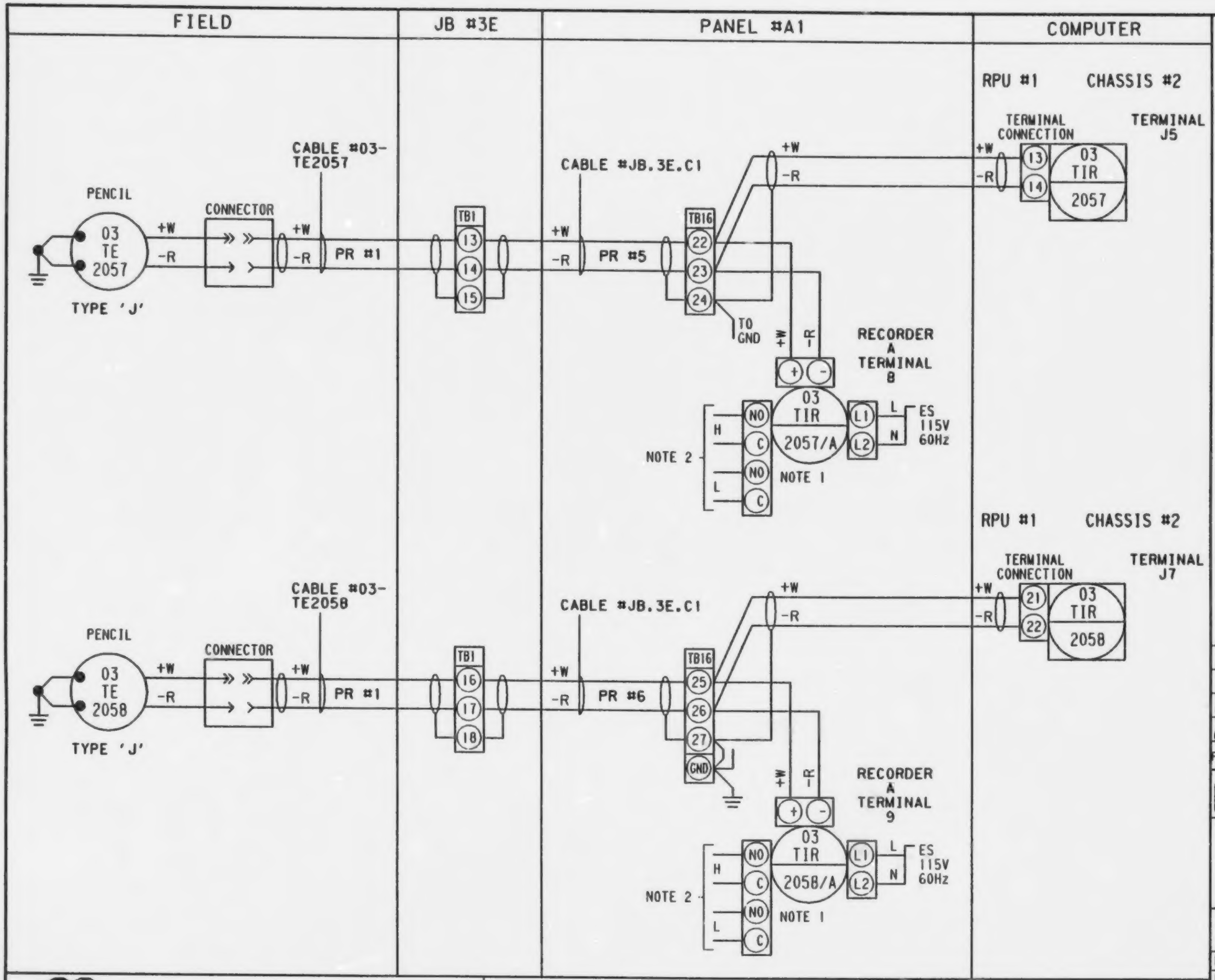

NOTES:
1. POINT-ON "YEW" MULTIPOINT RECORDER.
2. ALARM-WIRED TO COMMON PANEL ALARM. ONE SET OF ALARM CONTACTS PER RECORDER ARE COMMON TO ALL POINTS.

GENERAL NOTES:

A. 24 VAC Power Supply from GFC, Hammond Series Power Supply in panel.

B. 4-20mA signals to computer are shunted by EMR with a resistor to provide voltage signal to computer card.

C. Compatibility of voltage signals to computer programmed by EMR.

REV	DATE	DESCRIPTION	CHK	MEC APP	EMR APP
01	86.09	PH.1 FINAL	OP	WAP	
00	86.07.14	FOR EMR APPROVAL	RPW		✓

Energy, Mines and Resources Canada / Énergie, Mines et Ressources Canada

LOOP DIAGRAM
03-T-2057/2058
AREA 3
REACTOR AND SAMPLING SYSTEM

EMR COPROCESSING PILOT PLANT
PP3

PID No.	D-3-3 -MP-2		
DRAWN	CAD	DATE	86.06.12
CHKD		REV	01
DESIGN			

Monenco Consultants Limited

WORK ORDER No. DSS 8279-3

REG. No. 203931

LOOP12

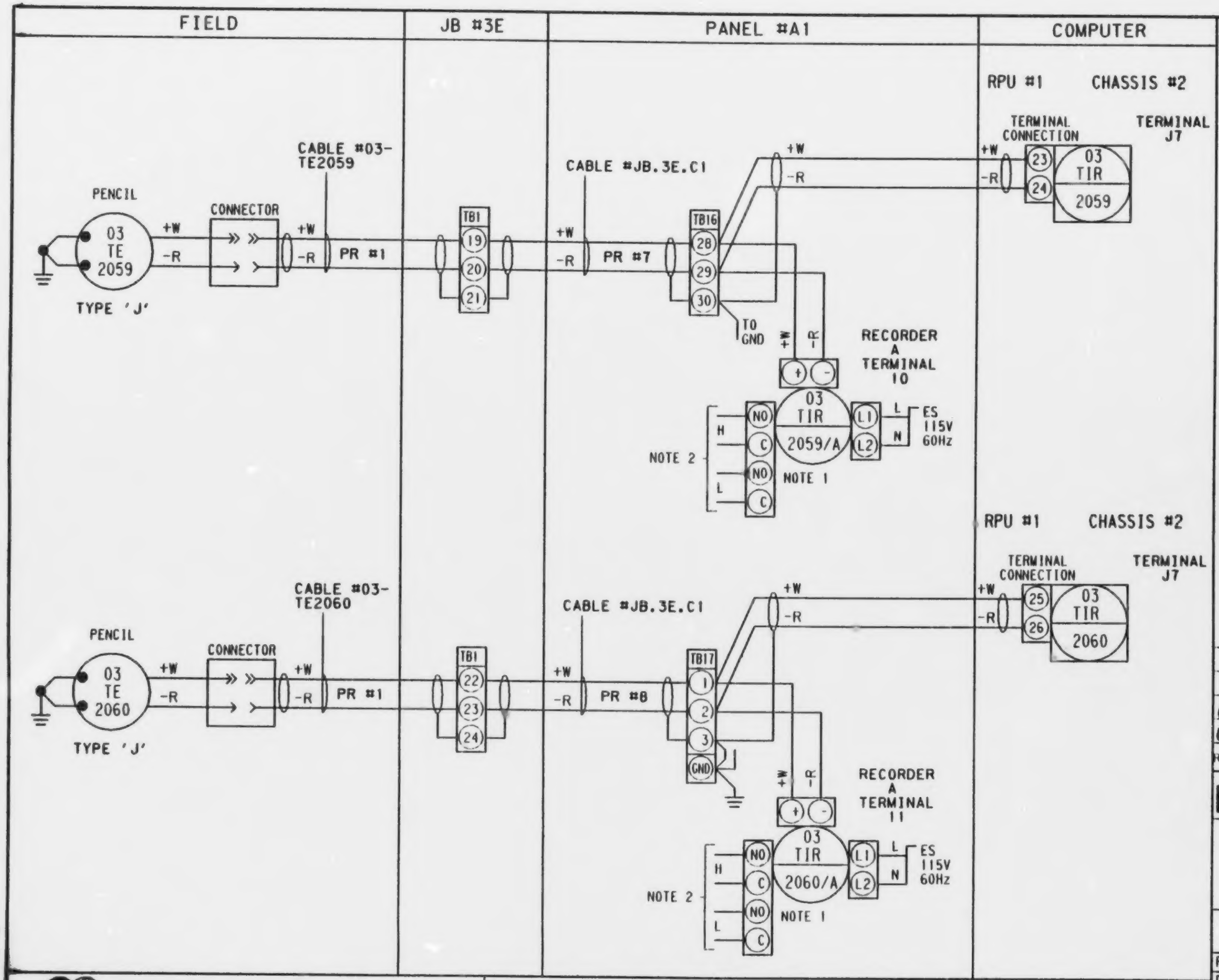

NOTES:
1. POINT-ON "YEW" MULTIPOINT RECORDER.
2. ALARM-WIRED TO COMMON PANEL ALARM. ONE SET OF ALARM CONTACTS PER RECORDER ARE COMMON TO ALL POINTS.

GENERAL NOTES:

A. 24 VAC Power Supply from GFC, Hammond Series Power Supply in panel.

B. 4-20mA signals to computer are shunted by EMR with a resistor to provide voltage signal to computer card.

C. Compatibility of voltage signals to computer programmed by EMR.

REV	DATE	DESCRIPTION	CHK	MEC APP	EMR APP
01	86.09	PH.1 FINAL	CP	WRP	
00	86.07.14	FOR EMR APPROVAL	RRJ		✓

Energy, Mines and Resources Canada — Énergie, Mines et Ressources Canada

LOOP DIAGRAM
03-T-2059/2060
AREA 3
REACTOR AND SAMPLING SYSTEM

EMR COPROCESSING PILOT PLANT
PP3

PID No.	D-3-3 -MP-2		
DRAWN	CAD	DATE	86.06.12
CHKD			REV
DESIGN			01

Monenco Consultants Limited | WORK ORDER No. DSS 8279-3 | REG. No. 203932

LOOP12

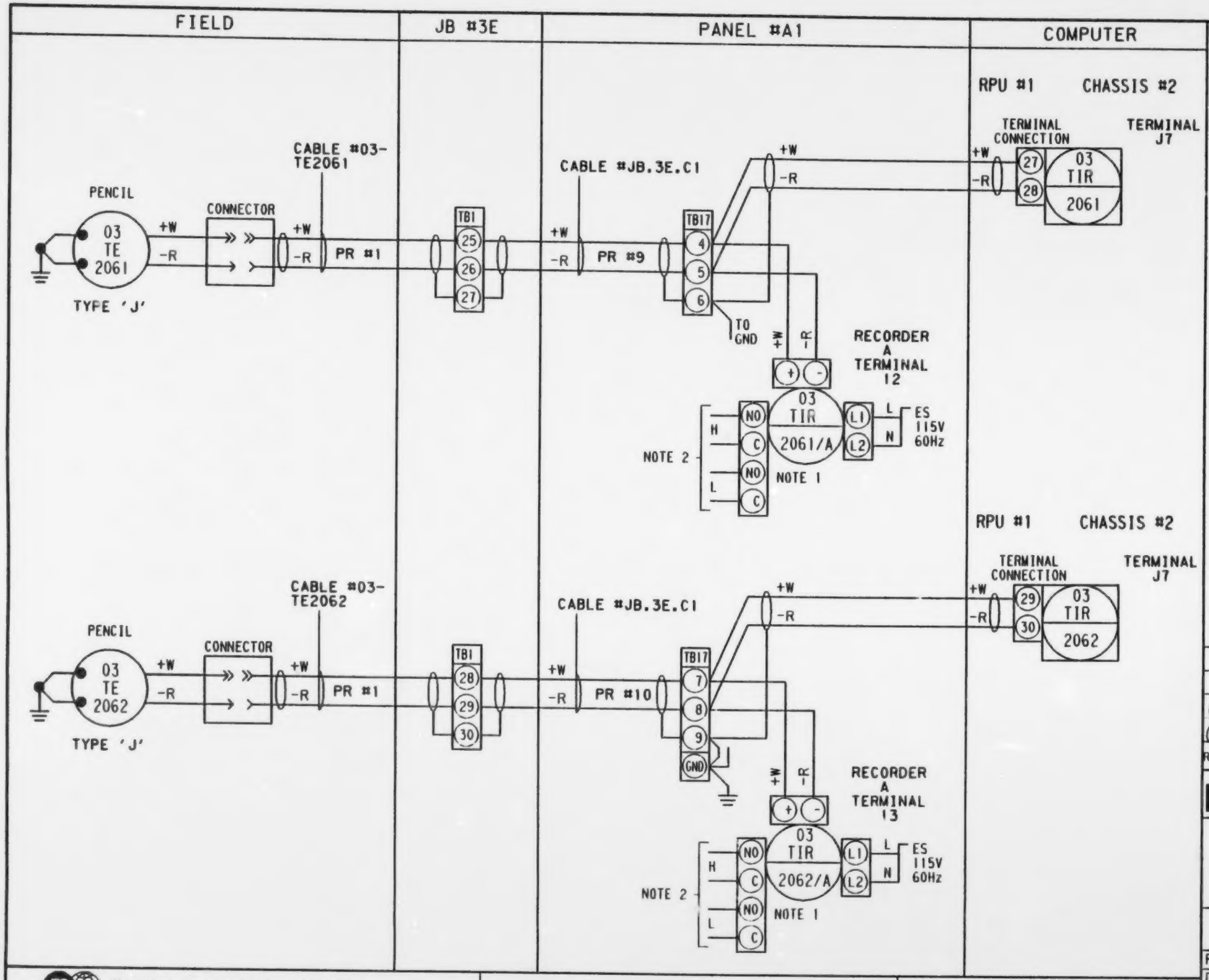

NOTES:

1. POINT-ON "YEW" MULTIPOINT RECORDER.
2. ALARM-WIRED TO COMMON PANEL ALARM. ONE SET OF ALARM CONTACTS PER RECORDER ARE COMMON TO ALL POINTS.

GENERAL NOTES:

A. 24 VAC Power Supply from GFC, Hammond Series Power Supply in panel.

B. 4-20mA signals to computer are shunted by EMR with a resistor to provide voltage signal to computer card.

C. Compatibility of voltage signals to computer programmed by EMR.

REV	DATE	DESCRIPTION	CHK	MEC APP	EMR APP
01	86.09	PILI FINAL	CP	WAP	
00	86.07.14	FOR EMR APPROVAL	RAJ		✓

Energy, Mines and Resources Canada — Énergie, Mines et Ressources Canada

LOOP DIAGRAM
03-T-2061/2062
AREA 3
REACTOR AND SAMPLING SYSTEM

EMR COPROCESSING PILOT PLANT PP3

PID No.	D-3-3 -MP-2		
DRAWN	CAD	DATE	86.06.12
CHKD		REV	01
DESIGN			

Monenco Consultants Limited

WORK ORDER No. DSS 8279-3

REG. No. 203933

LOOP12

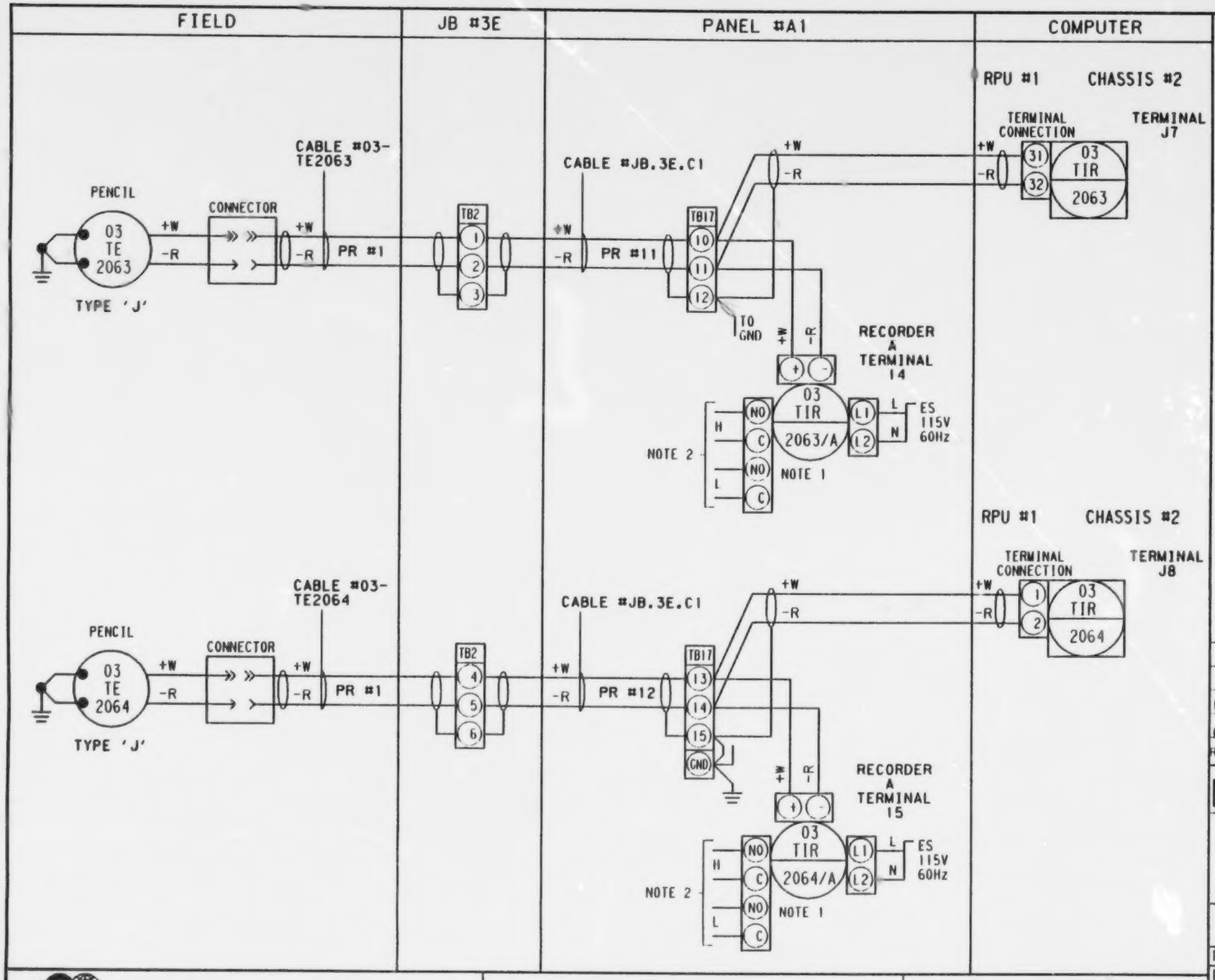

NOTES:
1. POINT-ON "YEW" MULTIPOINT RECORDER.
2. ALARM-WIRED TO COMMON PANEL ALARM. ONE SET OF ALARM CONTACTS PER RECORDER ARE COMMON TO ALL POINTS.

GENERAL NOTES:

A. 24 VAC Power Supply from GFC, Hammond Series Power Supply in panel.

B. 4-20mA signals to computer are shunted by EMR with a resistor to provide voltage signal to computer card.

C. Compatibility of voltage signals to computer programmed by EMR.

REV	DATE	DESCRIPTION	CHK	MEC APP	EMR APP
01	86.09	PH.1 FINAL	cP	WR	
00	86.07.14	FOR EMR APPROVAL	RPW		✓

Energy, Mines and Resources Canada / Énergie, Mines et Ressources Canada

LOOP DIAGRAM
03-T-2063/2064
AREA 3
REACTOR AND SAMPLING SYSTEM

EMR COPROCESSING PILOT PLANT
PP3

PID No.	D-3-3 -MP-2		
DRAWN	CAD	DATE	86.06.12
CHKD		REV	01
DESIGN			

Monenco Consultants Limited

WORK ORDER No. DSS 8279-3

REG. No. 203934

LOOP12

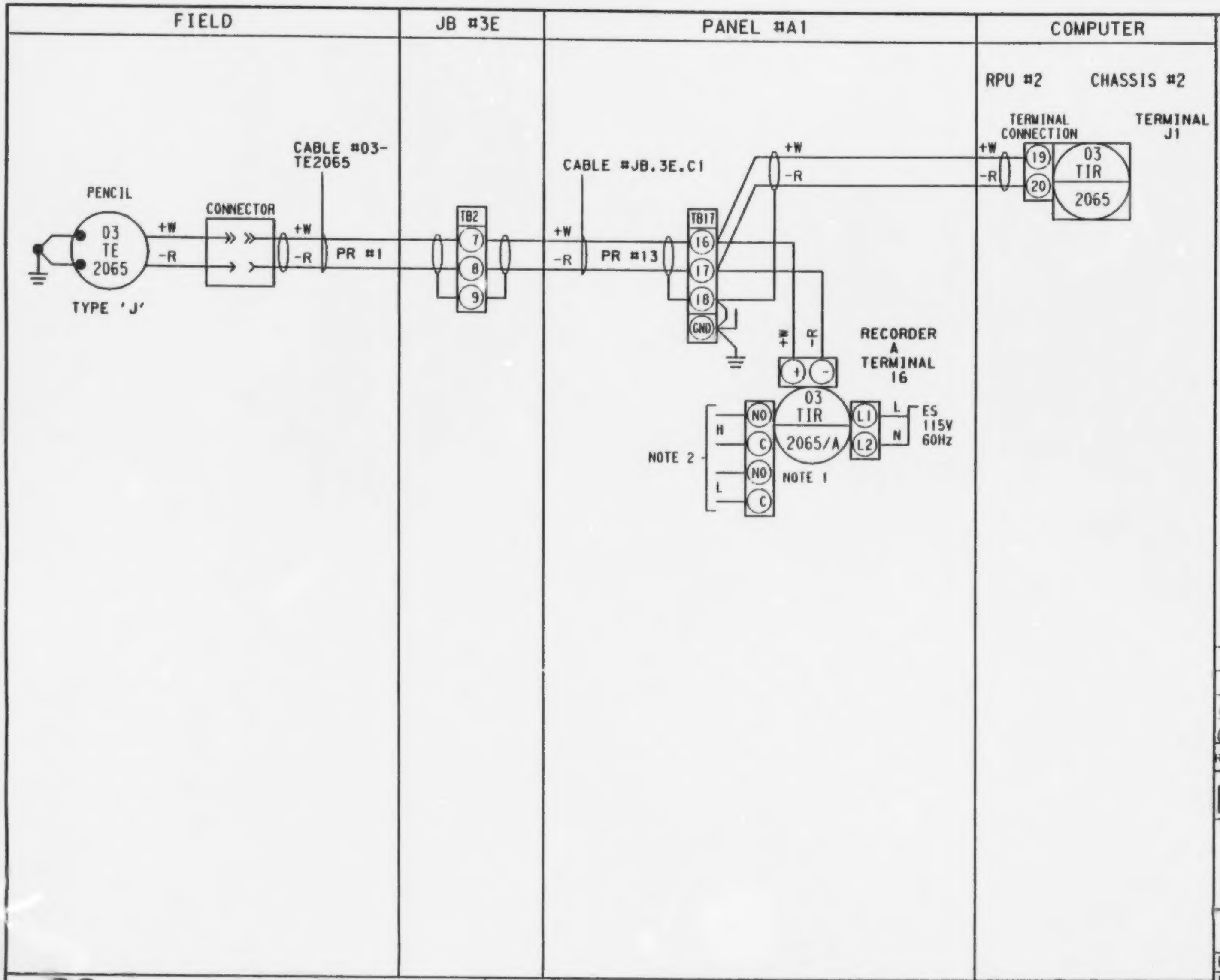

NOTES:
1. POINT-ON "YEW" MULTIPOINT RECORDER.
2. ALARM-WIRED TO COMMON PANEL ALARM. ONE SET OF ALARM CONTACTS PER RECORDER ARE COMMON TO ALL POINTS.

GENERAL NOTES:

A. 24 VAC Power Supply from GFC, Hammond Series Power Supply in panel.

B. 4-20mA signals to computer are shunted by EMR with a resistor to provide voltage signal to computer card.

C. Compatibility of voltage signals to computer programmed by EMR.

REV	DATE	DESCRIPTION	CHK	MEC APP	EMR APP
01	86.09	Ph.1 FINAL	[illegible]	[illegible]	
00	86.07.14	FOR EMR APPROVAL	RAJ		✓

Energy, Mines and Resources Canada / Énergie, Mines et Ressources Canada

LOOP DIAGRAM
03-T-2065
AREA 3
REACTOR AND SAMPLING SYSTEM

EMR COPROCESSING PILOT PLANT
PP3

PID No.	D-3-3 -MP-2		
DRAWN	CAD	DATE	86.06.12
CHKD			REV
DESIGN			01

Monenco Consultants Limited

WORK ORDER No. DSS 8279-3

REG. No. 203935

LOOP12

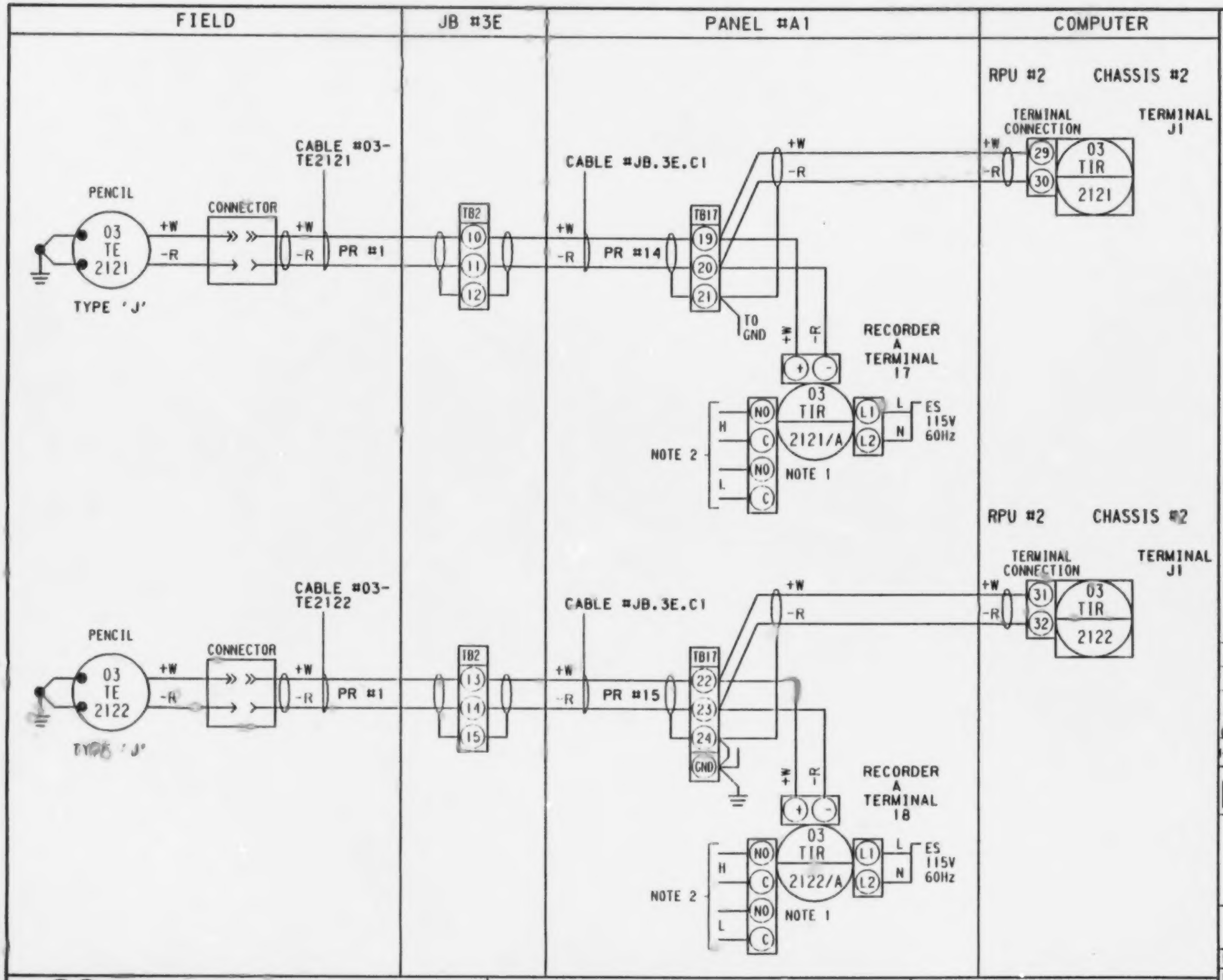

NOTES:
1. POINT-ON "YEW" MULTIPOINT RECORDER.
2. ALARM-WIRED TO COMMON PANEL ALARM. ONE SET OF ALARM CONTACTS PER RECORDER ARE COMMON TO ALL POINTS.

GENERAL NOTES:

A. 24 VAC Power Supply from GFC, Hammond Series Power Supply in panel.

B. 4-20mA signals to computer are shunted by EMR with a resistor to provide voltage signal to computer card.

C. Compatibility of voltage signals to computer programmed by EMR.

REV	DATE	DESCRIPTION	CHK	MEC APP	EMR APP
01	86.09	PH.1 FINAL			
00	86.07.14	FOR EMR APPROVAL	RPW		✓

Energy, Mines and Resources Canada — Énergie, Mines et Ressources Canada

LOOP DIAGRAM
03-T-2121/2122
AREA 3
REACTOR AND SAMPLING SYSTEM

EMR COPROCESSING PILOT PLANT PP3

PID No. D-3-3 -MP-2
DRAWN CAD DATE 86.06.12
CHKD
DESIGN
REV 0

Monenco Consultants Limited

WORK ORDER No. DSS 8279-3

REG. No. 203936

LOOP12

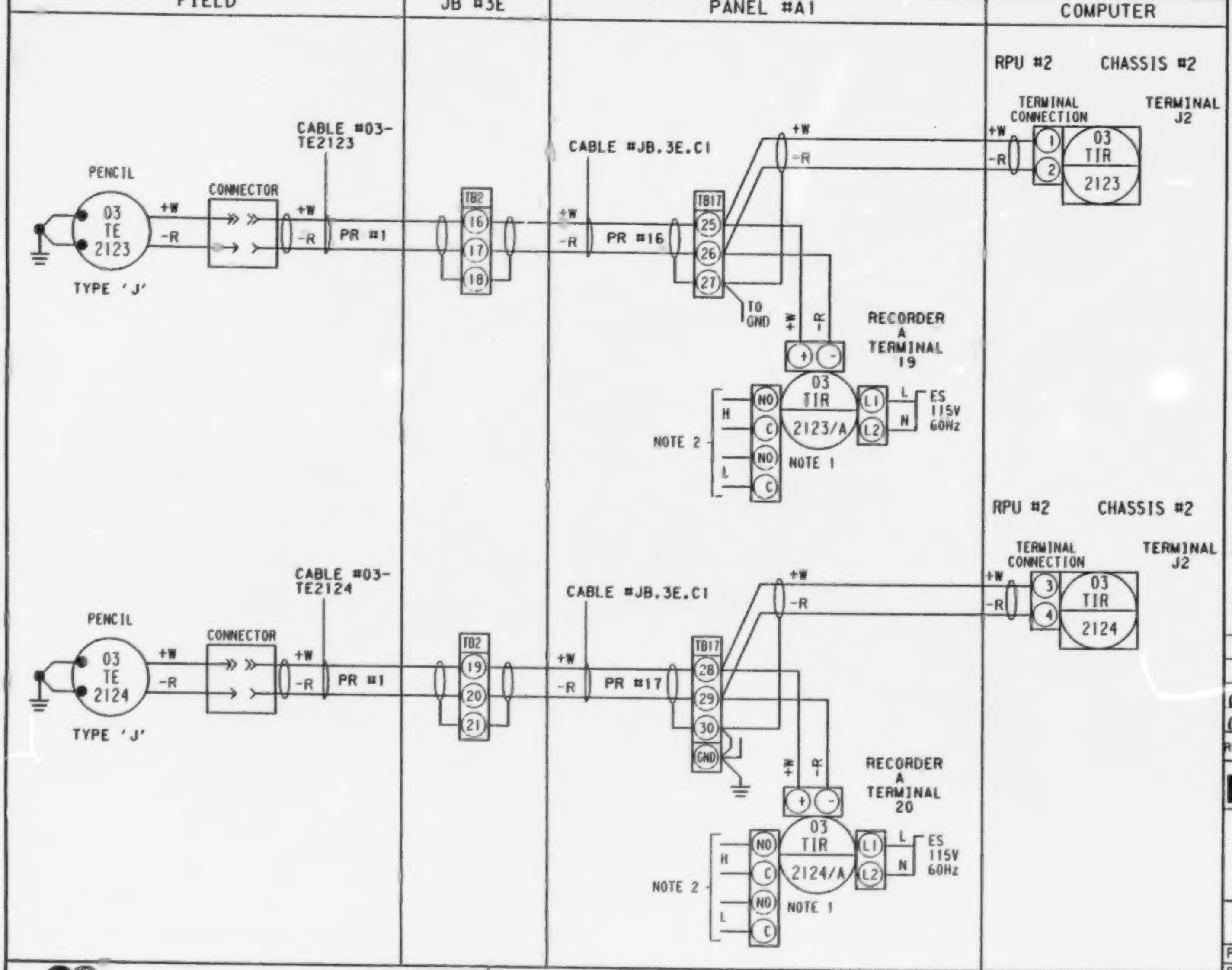

NOTES:
1. POINT-ON "YEW" MULTIPOINT RECORDER.
2. ALARM-WIRED TO COMMON PANEL ALARM. ONE SET OF ALARM CONTACTS PER RECORDER ARE COMMON TO ALL POINTS.

GENERAL NOTES:

A. 24 VAC Power Supply from GFC, Hammond Series Power Supply in panel.

B. 4-20mA signals to computer are shunted by EMR with a resistor to provide voltage signal to computer card.

C. Compatibility of voltage signals to computer programmed by EMR.

REV	DATE	DESCRIPTION	CHK	MEC APP	EMR APP
01	86.09	AV.1 FINAL	of	WR	
00	86.07.14	FOR EMR APPROVAL	RAJ		✓

Energy, Mines and Resources Canada / Énergie, Mines et Ressources Canada

LOOP DIAGRAM
03-T-2123/2124
AREA 3
REACTOR AND SAMPLING SYSTEM

EMR COPROCESSING PILOT PLANT
PP3

PID No.	D-3-3 -MP-2		
DRAWN	CAD	DATE	86.06.12
CHKD			REV
DESIGN			01

Monenco Consultants Limited

WORK ORDER No. DSS 8279-3

REG. No. 203937

LOOP12

B

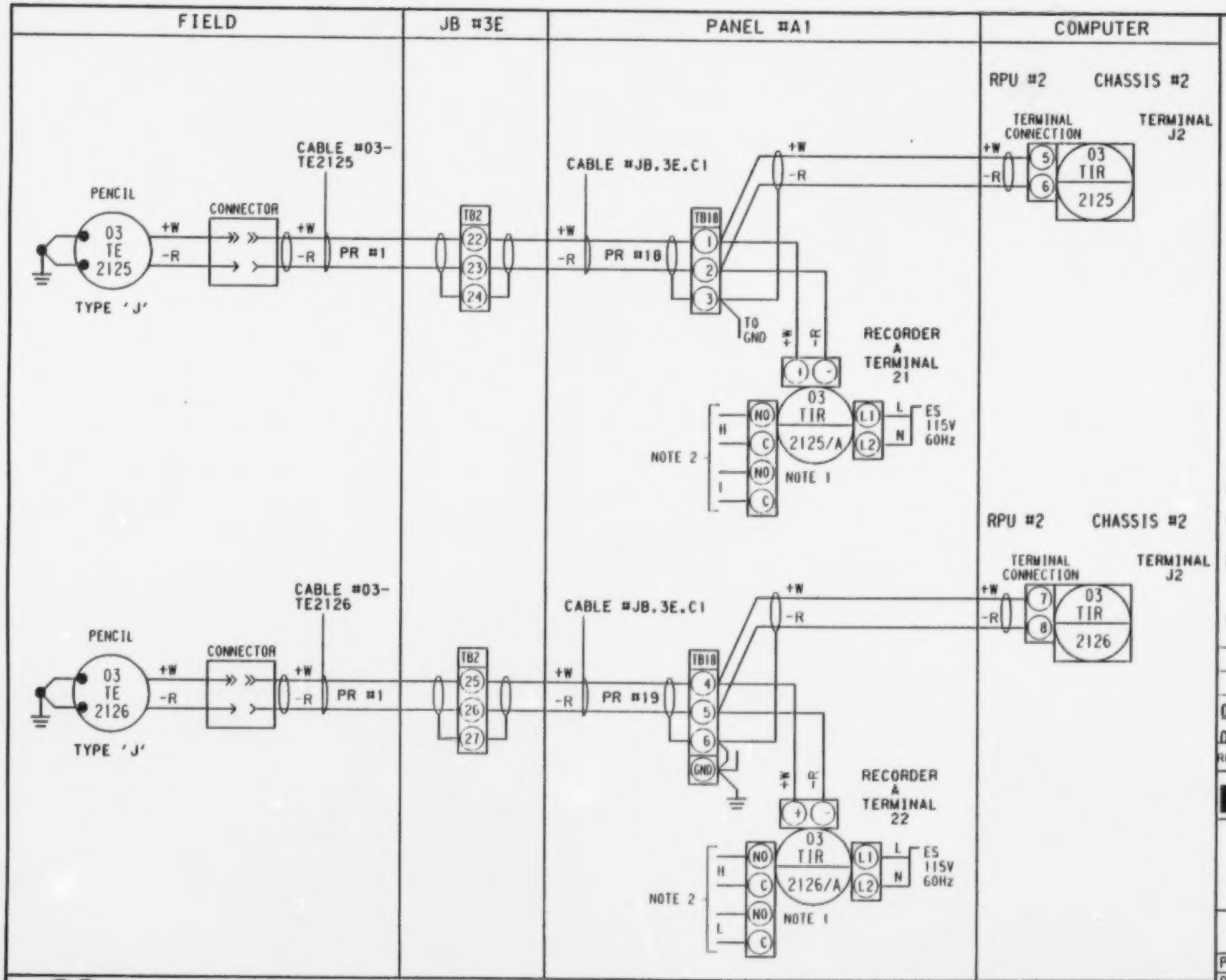

NOTES:

1. POINT-ON "YEW" MULTIPOINT RECORDER.
2. ALARM-WIRED TO COMMON PANEL ALARM. ONE SET OF ALARM CONTACTS PER RECORDER ARE COMMON TO ALL POINTS.

GENERAL NOTES:

A. 24 VAC Power Supply from GFC, Hammond Series Power Supply in panel.

B. 4-20mA signals to computer are shunted by EMR with a resistor to provide voltage signal to computer card.

C. Compatibility of voltage signals to computer programmed by EMR.

REV	DATE	DESCRIPTION	CHK	MEC APP	EMR APP
01	86.09	PH.1 FINAL	GP	WAR	
00	86.07.14	FOR EMR APPROVAL	RAW		✓

Energy, Mines and Resources Canada — Énergie, Mines et Ressources Canada

LOOP DIAGRAM
03-T-2125/2126
AREA 3
REACTOR AND SAMPLING SYSTEM

EMR COPROCESSING PILOT PLANT
PP3

PID No.		D-3-3 -MP-2	
DRAWN	CAD	DATE	86.06.12
CHKD			REV
DESIGN			01

Monenco Consultants Limited | WORK ORDER No. DSS 8279-3 | REG. No. 203938

LOOP12

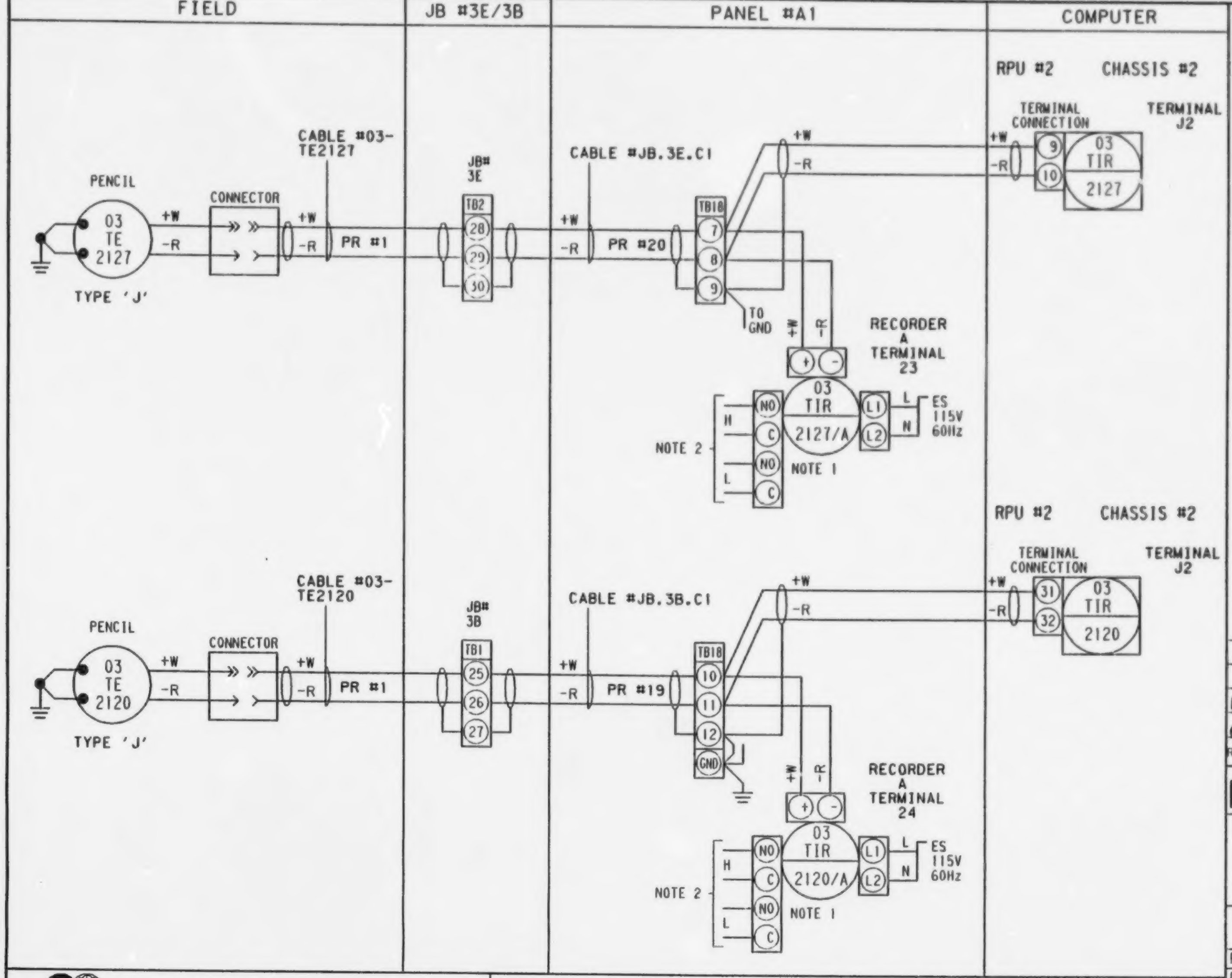

NOTES:
1. POINT-ON "YEW" MULTIPOINT RECORDER.
2. ALARM-WIRED TO COMMON PANEL ALARM. ONE SET OF ALARM CONTACTS PER RECORDER ARE COMMON TO ALL POINTS.

GENERAL NOTES:

A. 24 VAC Power Supply from GFC, Hammond Series Power Supply in panel.

B. 4-20mA signals to computer are shunted by EMR with a resistor to provide voltage signal to computer card.

C. Compatibility of voltage signals to computer programmed by EMR.

REV	DATE	DESCRIPTION	CHK	MEC APP	EMR APP
01	86.09	AH.1 FINAL	VP	WAG	
00	86.07.14	FOR EMR APPROVAL	RPW		✓

Energy, Mines and Resources Canada / Énergie, Mines et Ressources Canada

LOOP DIAGRAM
03-T-2127/2120
AREA 3
REACTOR AND SAMPLING SYSTEM

EMR COPROCESSING PILOT PLANT
PP3

PID No.	D-3-3 -MP-2		
DRAWN	CAD	DATE	86.06.12
CHKD			REV
DESIGN			01

Monenco Consultants Limited | WORK ORDER No. DSS 8279-3 | REG. No. 203939

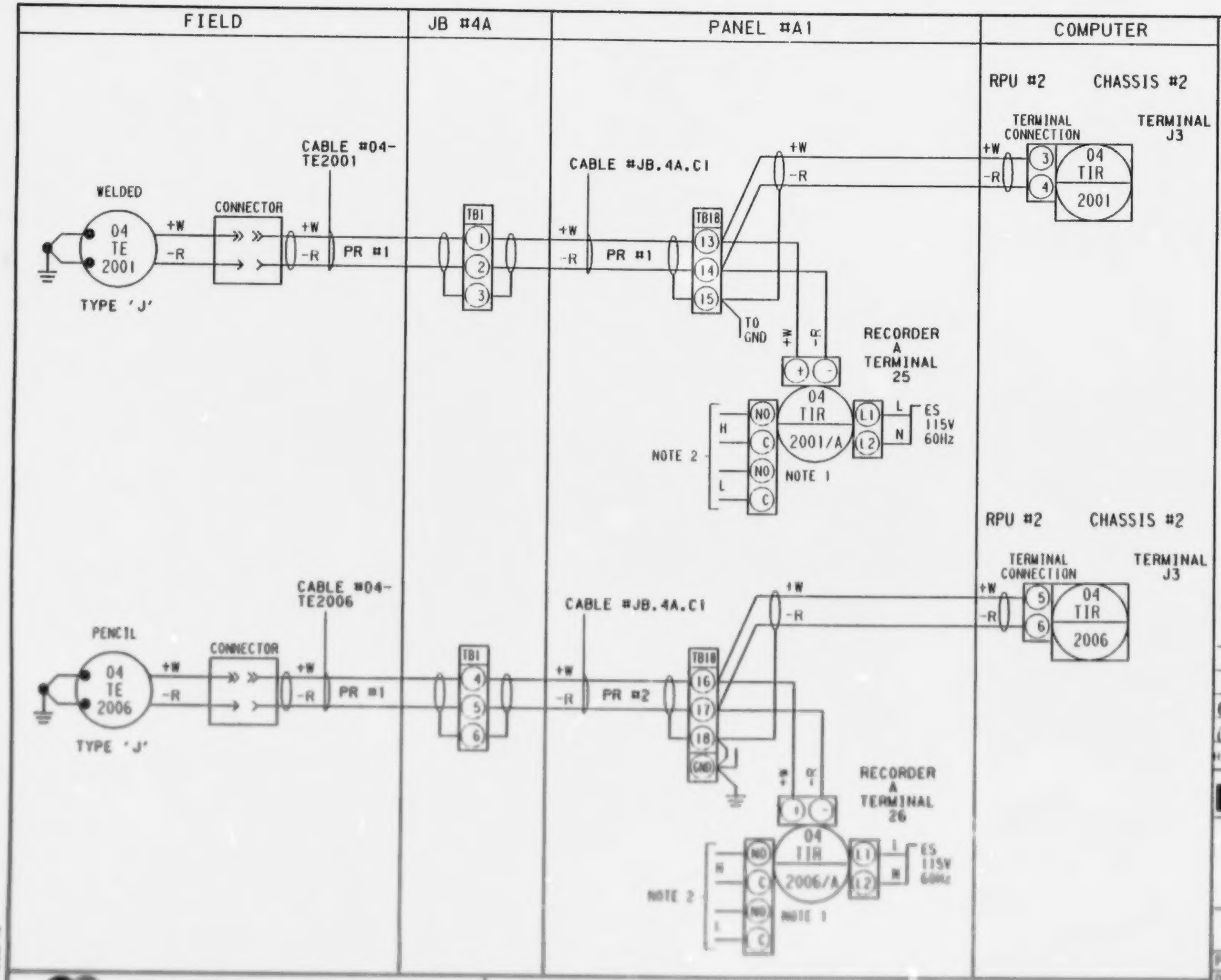

NOTES:

1. POINT-ON "YEW" MULTIPOINT RECORDER.
2. ALARM-WIRED TO COMMON PANEL ALARM. ONE SET OF ALARM CONTACTS PER RECORDER ARE COMMON TO ALL POINTS.

GENERAL NOTES:

A. 24 VAC Power Supply from GFC, Hammond Series Power Supply in panel.

B. 4-20mA signals to computer are shunted by EMR with a resistor to provide voltage signal to computer card.

C. Compatibility of voltage signals to computer programmed by EMR.

REV	DATE	DESCRIPTION	CHK	MEC APP	EMR APP
01	86.09	PH.I FINAL	[illegible]	[illegible]	
0	86.07.14	FOR EMR APPROVAL	BW		✓

Energy, Mines and Resources Canada — Énergie, Mines et Ressources Canada

LOOP DIAGRAM
04-T-2001/2006
AREA 4
HEAVY OIL SYSTEM

EMR COPROCESSING PILOT PLANT
PP3

PID No.	D-3-4 -MP-1		
DRAWN	CAD	DATE	86.06.12
CHKD		REV	
DESIGN			01

Monenco Consultants Limited — WORK ORDER No. DSS 8279-3 — REG. No. 203941

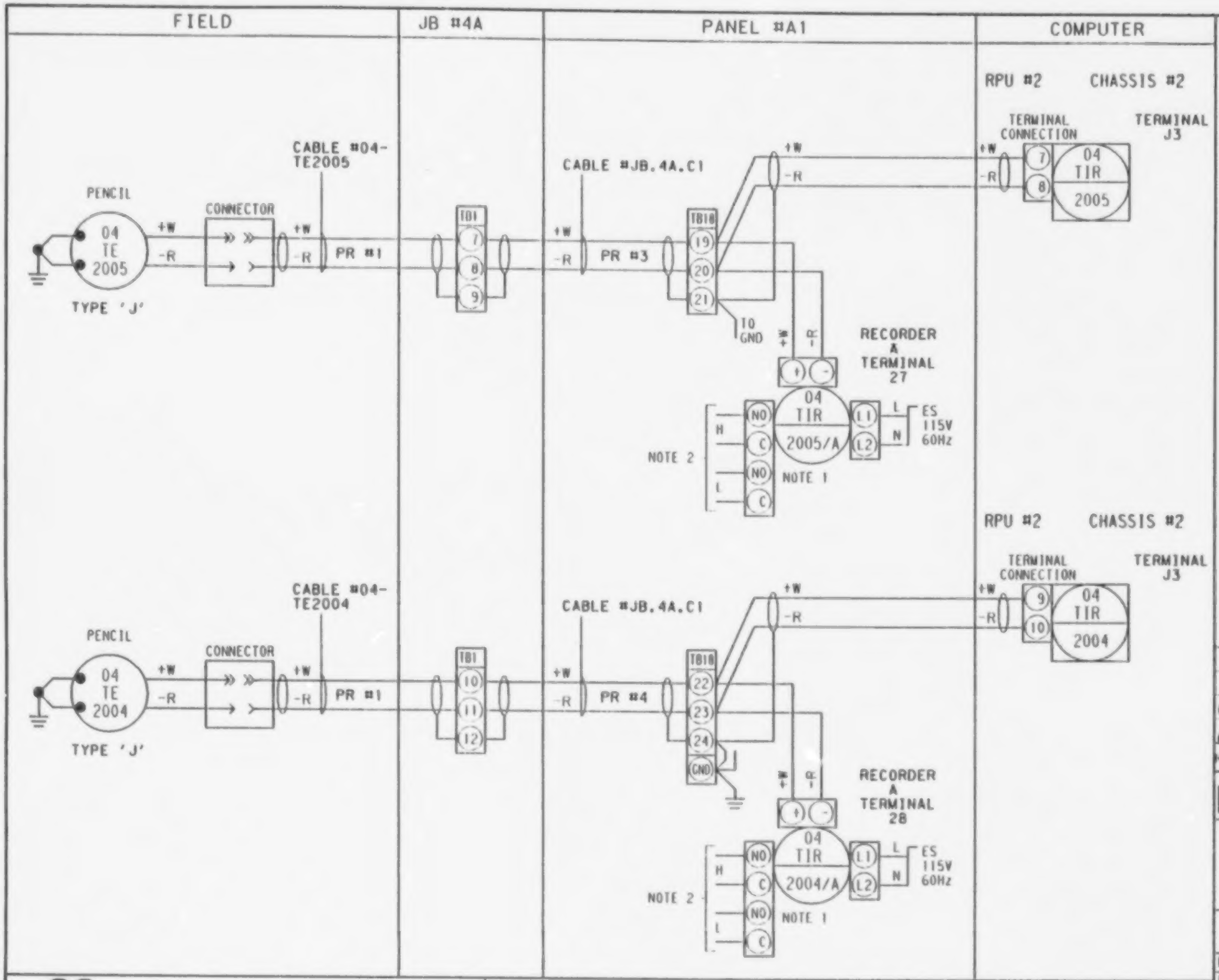

NOTES:
1. POINT-ON "YEW" MULTIPOINT RECORDER.
2. ALARM-WIRED TO COMMON PANEL ALARM. ONE SET OF ALARM CONTACTS PER RECORDER ARE COMMON TO ALL POINTS.

GENERAL NOTES:

A. 24 VAC Power Supply from GFC, Hammond Series Power Supply in panel.

B. 4-20mA signals to computer are shunted by EMR with a resistor to provide voltage signal to computer card.

C. Compatibility of voltage signals to computer programmed by EMR.

REV	DATE	DESCRIPTION	CHK	MEC APP	EMR APP
01	86.09	ALL FINAL	CP	GAR	
00	86.07.16	FOR EMR APPROVAL	RAJ		✓

Energy, Mines and Resources Canada / Énergie, Mines et Ressources Canada

LOOP DIAGRAM
04-T-2005/2004
AREA 4
HEAVY OIL SYSTEM

EMR COPROCESSING PILOT PLANT
PP3

PID No. D-3-4 -MP-1
DRAWN CAD DATE 86.06.12
CHKD REV 01
DESIGN

Monenco Consultants Limited

WORK ORDER No. DSS 8279-3

REG. No. 203942

LOOP12

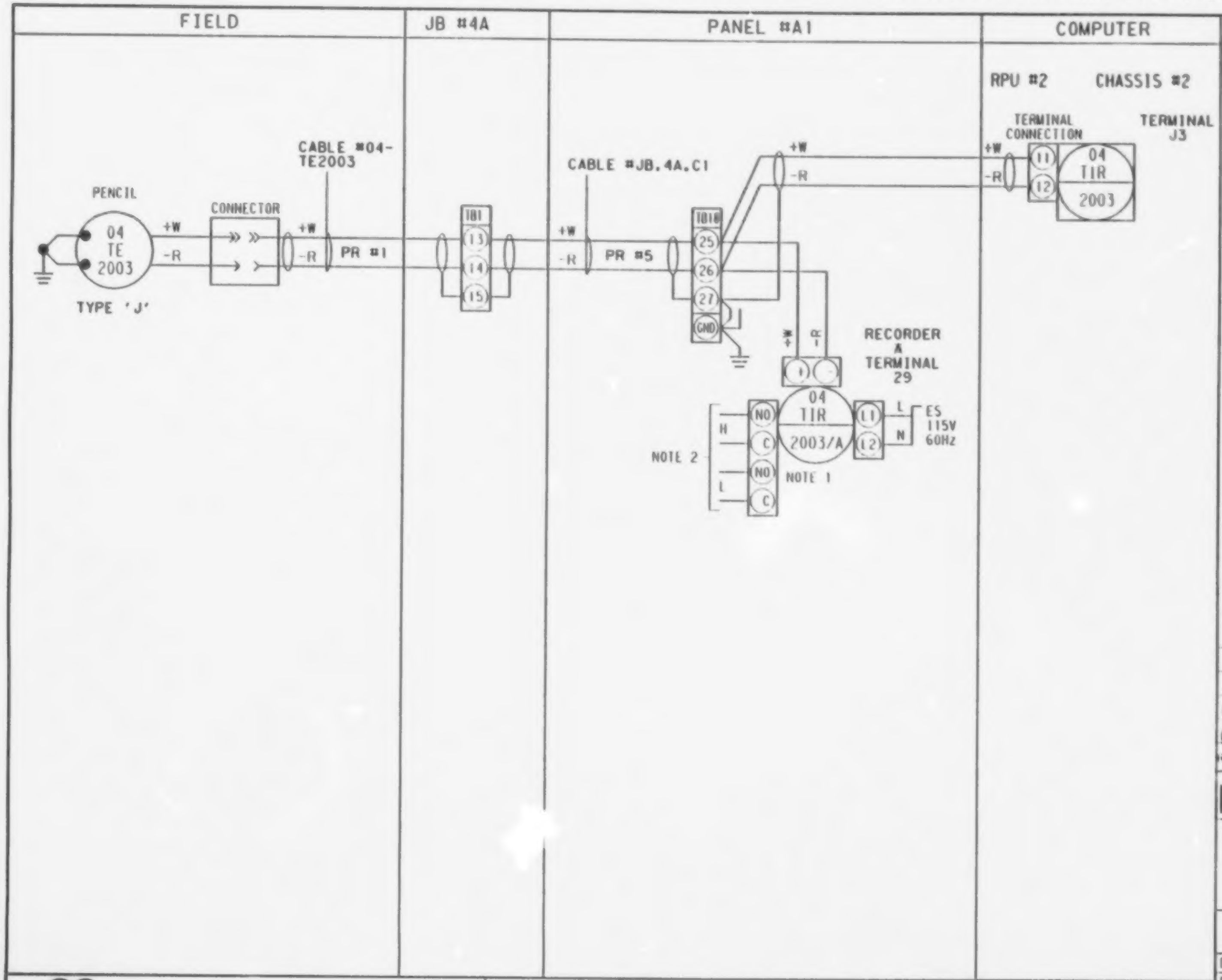

NOTES:

1. POINT-ON "YEW" MULTIPOINT RECORDER.
2. ALARM-WIRED TO COMMON PANEL ALARM. ONE SET OF ALARM CONTACTS PER RECORDER ARE COMMON TO ALL POINTS.

GENERAL NOTES:

A. 24 VAC Power Supply from GFC, Hammond Series Power Supply in panel.

B. 4-20mA signals to computer are shunted by EMR with a resistor to provide voltage signal to computer card.

C. Compatibility of voltage signals to computer programmed by EMR.

REV	DATE	DESCRIPTION	CHK	MEC APP	EMR APP
01	86.09	PH.I FINAL			
00	86.07.14	FOR EMR APPROVAL	RPW		✓

Energy, Mines and Resources Canada — Énergie, Mines et Ressources Canada

LOOP DIAGRAM
04-T-2003
AREA 4
HEAVY OIL SYSTEM

EMR COPROCESSING PILOT PLANT
PP3

PID No.	D-3-4 -MP-1		
DRAWN	CAD	DATE	86.06.12
CHKD		REV	01
DESIGN			

Monenco Consultants Limited

WORK ORDER No. DSS 8279-3

REG. No. 203943

LOOP12

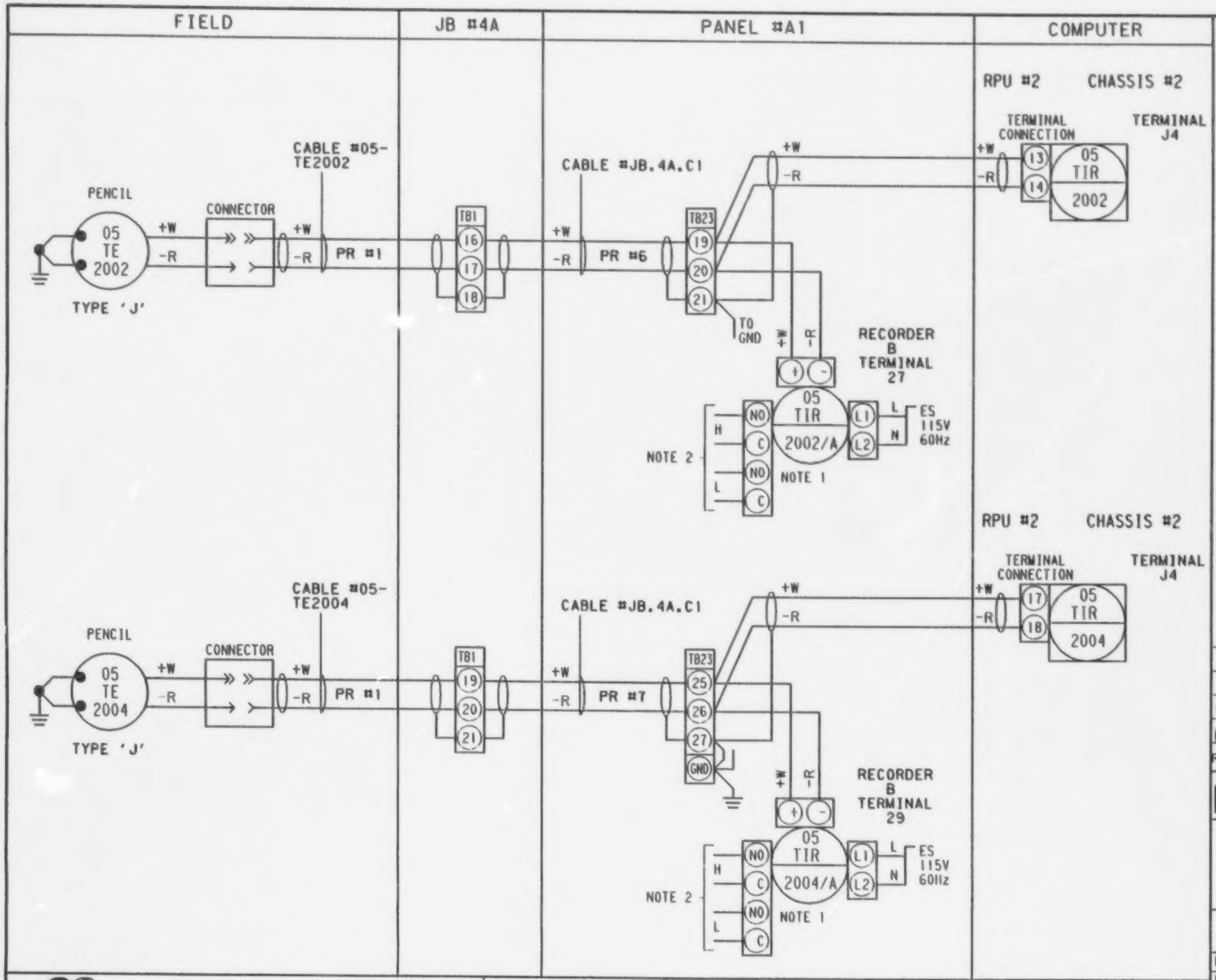

NOTES:
1. POINT-ON "YEW" MULTIPOINT RECORDER.
2. ALARM-WIRED TO COMMON PANEL ALARM. ONE SET OF ALARM CONTACTS PER RECORDER ARE COMMON TO ALL POINTS.

GENERAL NOTES:

A. 24 VAC Power Supply from GFC, Hammond Series Power Supply in panel.

B. 4-20mA signals to computer are shunted by EMR with a resistor to provide voltage signal to computer card.

C. Compatibility of voltage signals to computer programmed by EMR.

REV	DATE	DESCRIPTION	CHK	MEC APP	EMR APP
01	86.09	MLI FINAL	GP	WAP	
00	86.07.14	FOR EMR APPROVAL	RAJ		✓

Energy, Mines and Resources Canada — Énergie, Mines et Ressources Canada

LOOP DIAGRAM
05-T-2002/2004
AREA 4
LIGHT OIL SYSTEM

EMR COPROCESSING PILOT PLANT PP3

PID No.	D-3-5 -MP-1
DRAWN CAD	DATE 86.06.13
CHKD	REV 01
DESIGN	

Monenco Consultants Limited

WORK ORDER No. DSS 8279-3

REG. No. 203944

LOOP12

B

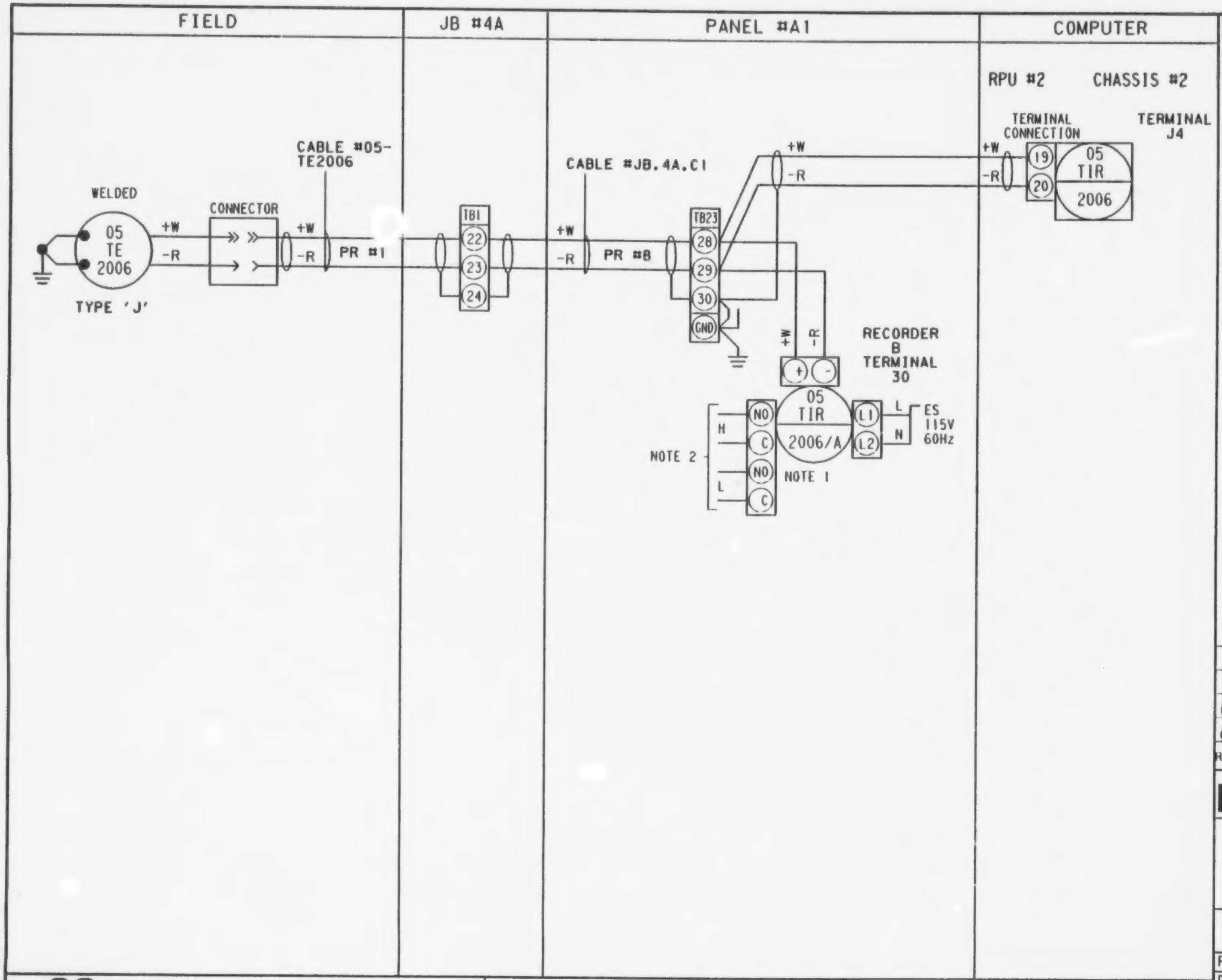

NOTES:
1. POINT-ON "YEW" MULTIPOINT RECORDER.
2. ALARM-WIRED TO COMMON PANEL ALARM. ONE SET OF ALARM CONTACTS PER RECORDER ARE COMMON TO ALL POINTS.

GENERAL NOTES:

A. 24 VAC Power Supply from GFC, Hammond Series Power Supply in panel.

B. 4-20mA signals to computer are shunted by EMR with a resistor to provide voltage signal to computer card.

C. Compatibility of voltage signals to computer programmed by EMR.

REV	DATE	DESCRIPTION	CHK	MEC APP	EMR APP
01	86.09	P&I FINAL	GP	WAS	
00	86.07.14	FOR EMR APPROVAL	RPW		✓

Energy, Mines and Resources Canada — Énergie, Mines et Ressources Canada

LOOP DIAGRAM
05-T-2006
AREA 4
LIGHT OIL SYSTEM

EMR COPROCESSING PILOT PLANT
PP3

PID No.			D-3-5 -MP-1
DRAWN	CAD	DATE	86.06.13
CHKD			REV
DESIGN			01

LOOP12

Monenco Consultants Limited | WORK ORDER No. DSS 8279-3 | REG. No. 203945

B

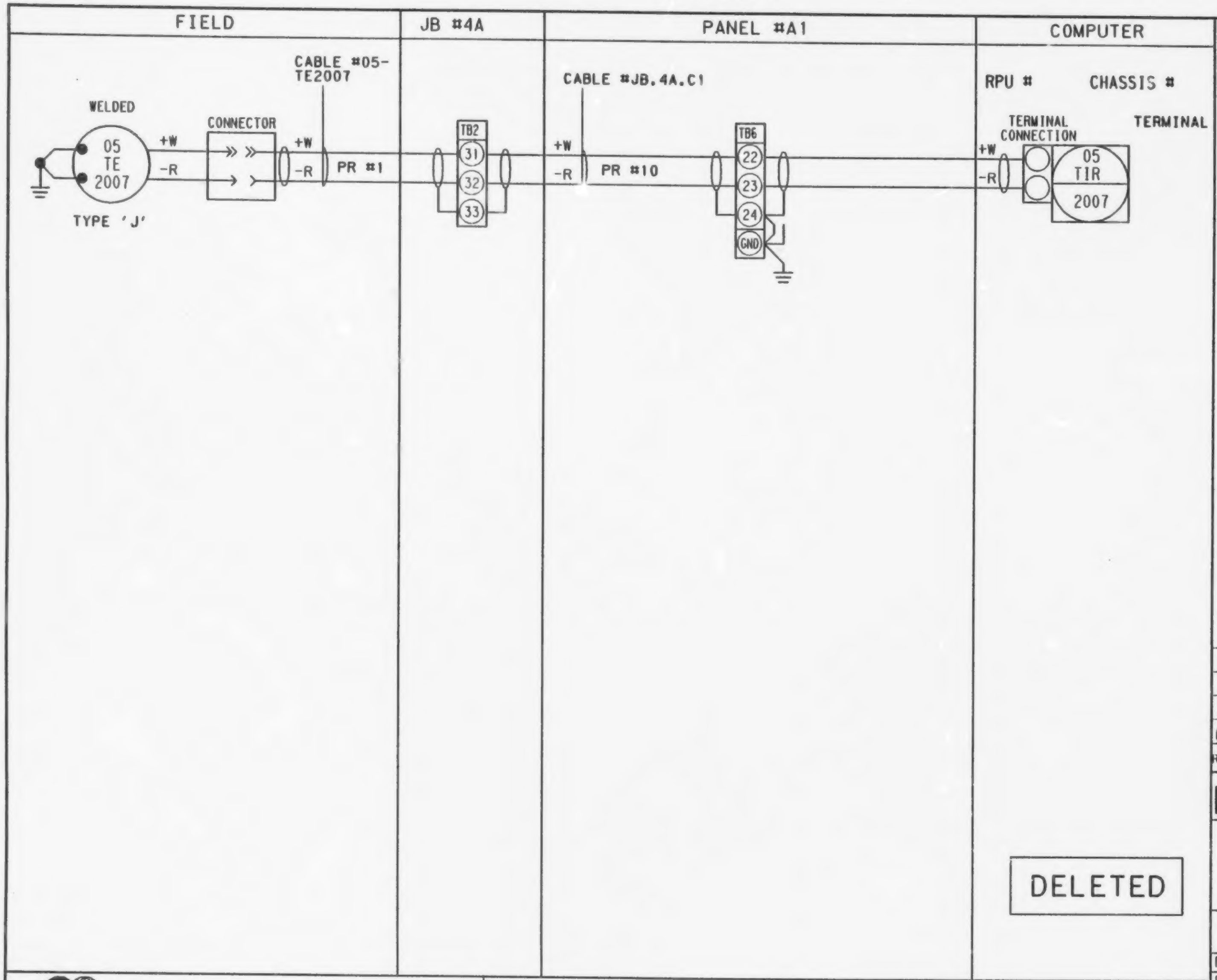

NOTES:

TERMINAL #'S NOT AVAILABLE.
THERMOCOUPLE NOT IN LIST OF AI'S
(FILE PP3 No.5 LISTAI.TXT)

GENERAL NOTES:

A. 24 VAC Power Supply from GFC, Hammond Series Power Supply in panel.

B. 4-20mA signals to computer are shunted by EMR with a resistor to provide voltage signal to computer card.

C. Compatibility of voltage signals to computer programmed by EMR.

REV	DATE	DESCRIPTION	CHK	MEC APP	EMR APP
01	86.09	A1.1 FINAL			
00	86.07.14	FOR EMR APPROVAL	RA		✓

Energy, Mines and Resources Canada — Énergie, Mines et Ressources Canada

LOOP DIAGRAM
05-T-2007
AREA 5
LIGHT OIL SYSTEM

DELETED

EMR COPROCESSING PILOT PLANT
PP3

PID No.	D-3-5 -MP-1		
DRAWN	CAD	DATE	86.06.27
CHKD			REV
DESIGN			01

LOOP1

Monenco Consultants Limited

WORK ORDER No. DSS 8279-3

REG. No. 203999

B

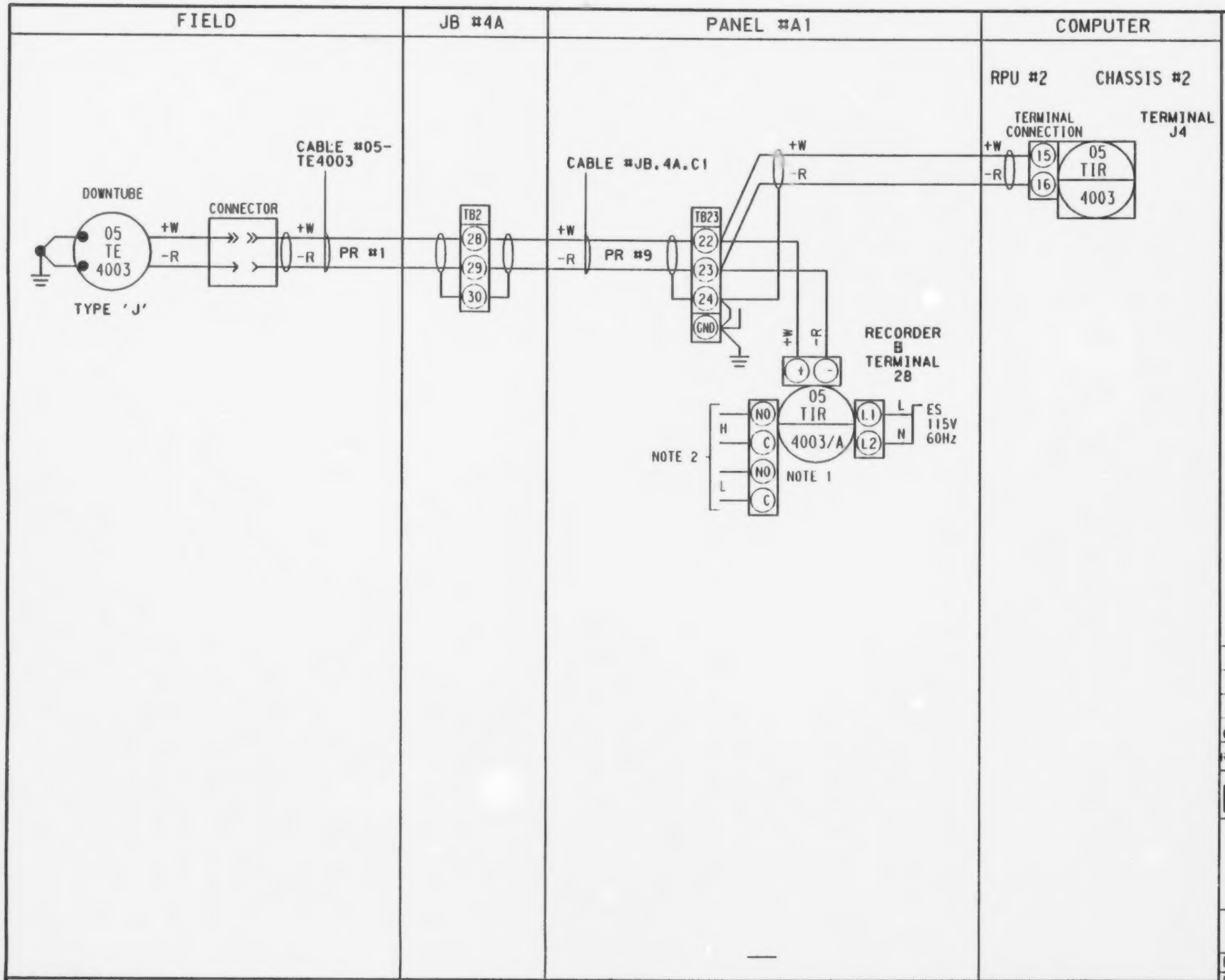

NOTES:
1. POINT-ON "YEW" MULTIPOINT RECORDER.
2. ALARM-WIRED TO COMMON PANEL ALARM. ONE SET OF ALARM CONTACTS PER RECORDER ARE COMMON TO ALL POINTS.

GENERAL NOTES:

A. 24 VAC Power Supply from GFC, Hammond Series Power Supply in panel.

B. 4-20mA signals to computer are shunted by EMR with a resistor to provide voltage signal to computer card.

C. Compatibility of voltage signals to computer programmed by EMR.

REV	DATE	DESCRIPTION	CHK	MEC APP	EMR APP
01	86.09	PH.1 FINAL			
00	86.07.14	FOR EMR APPROVAL	RPW		✓

Energy, Mines and Resources Canada — Énergie, Mines et Ressources Canada

LOOP DIAGRAM
05-T-4003
AREA 5
LIGHT OIL SYSTEM

EMR COPROCESSING PILOT PLANT PP3

PID No.	D-3-5 -MP-1		
DRAWN	CAD	DATE	86.06.13
CHKD			REV
DESIGN			01

Monenco Consultants Limited | WORK ORDER No. DSS 8279-3 | REG. No. 203985

LOOP12

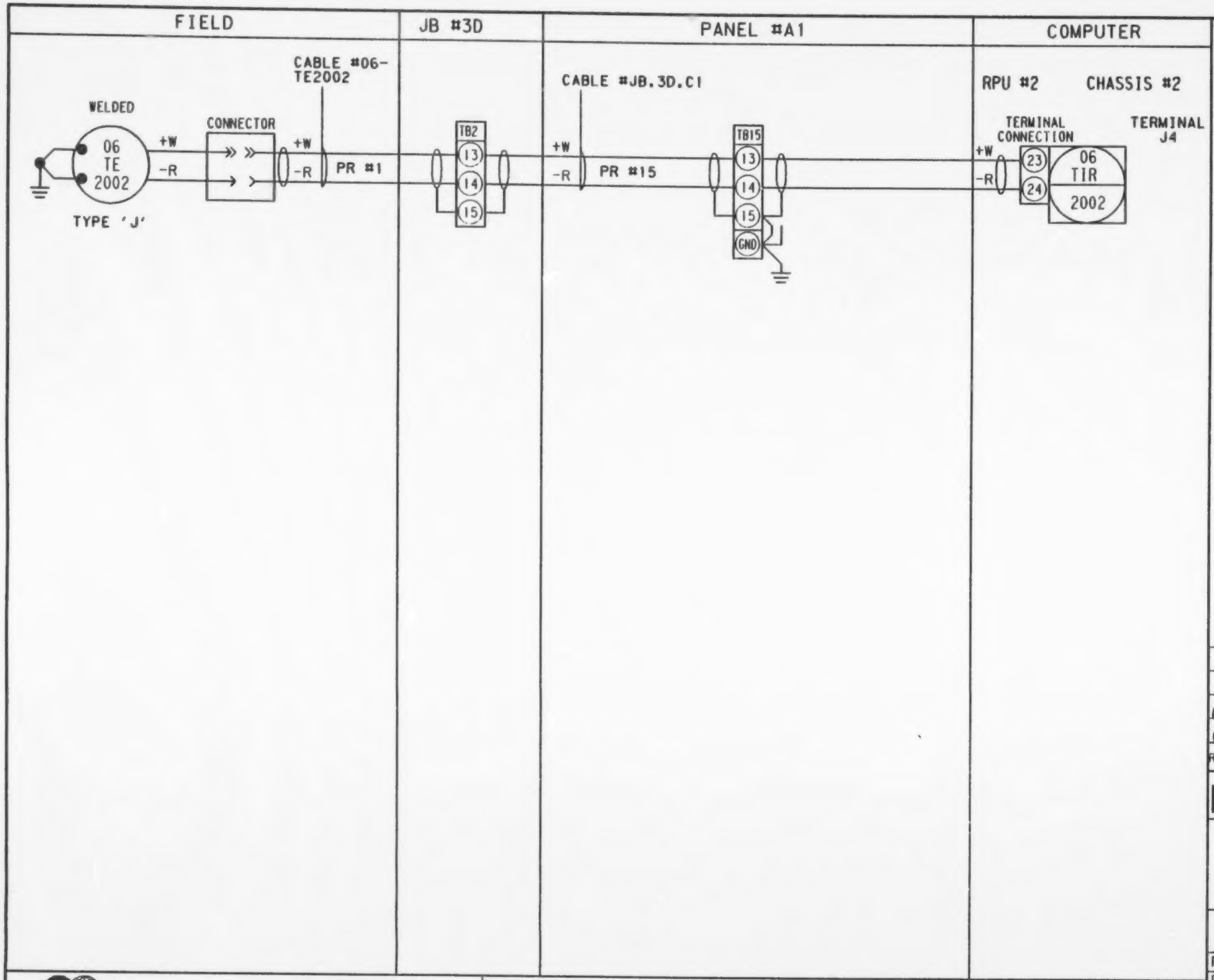

NOTES:

GENERAL NOTES:

A. 24 VAC Power Supply from GFC, Hammond Series Power Supply in panel.

B. 4-20mA signals to computer are shunted by EMR with a resistor to provide voltage signal to computer card.

C. Compatibility of voltage signals to computer programmed by EMR.

REV	DATE	DESCRIPTION	CHK	MEC APP	EMR APP
01	86.09	PH.1 FINAL	N'	WAP	
00	86.07.14	FOR EMR APPROVAL	RAW		✓

Energy, Mines and Resources Canada — Énergie, Mines et Ressources Canada

LOOP DIAGRAM
06-T-2002
AREA 6
WATER SCRUBBER SYSTEM

EMR COPROCESSING PILOT PLANT
PP3

PID No. D-3-6 -MP-1
DRAWN CAD DATE 86.06.11
CHKD
DESIGN
REV 01

Monenco Consultants Limited | WORK ORDER No. DSS 8279-3 | REG. No. 203921

LOOP1

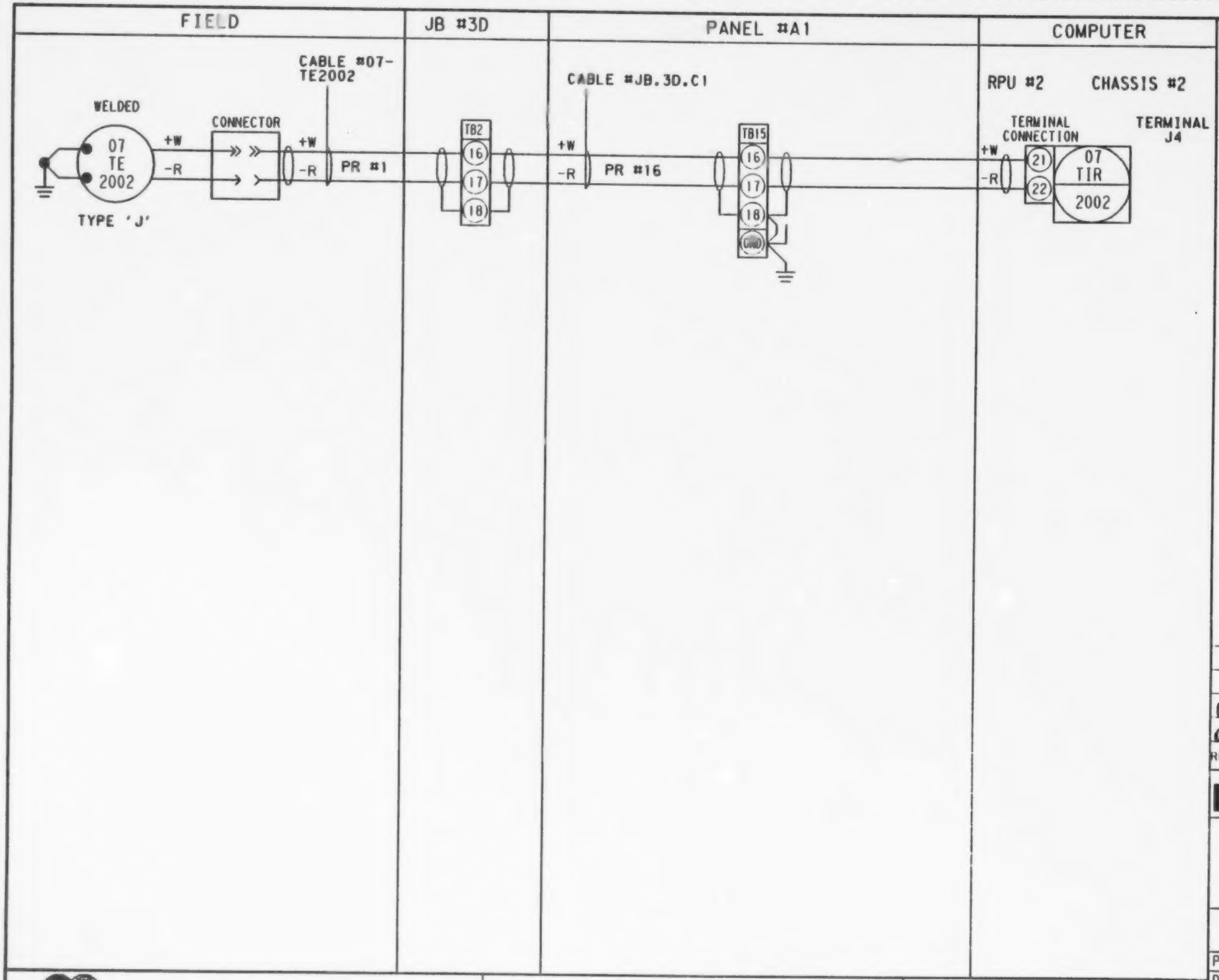

NOTES:

GENERAL NOTES:

A. 24 VAC Power Supply from GFC, Hammond Series Power Supply in panel.

B. 4-20mA signals to computer are shunted by EMR with a resistor to provide voltage signal to computer card.

C. Compatibility of voltage signals to computer programmed by EMR.

REV	DATE	DESCRIPTION	CHK	MEC APP	EMR APP
01	86.09	PH.1 FINAL		WB	
00	86.01.14	FOR EMR APPROVAL	RN		✓

Energy, Mines and Resources Canada — Énergie, Mines et Ressources Canada

LOOP DIAGRAM
07-T-2002
AREA 7
OIL SCRUBBER SYSTEM

EMR COPROCESSING PILOT PLANT
PP3

PID No.	D-3-7 -MP-1		
DRAWN	CAD	DATE	86.06.11
CHKD		REV	01
DESIGN			

Monenco Consultants Limited

WORK ORDER No. DSS 8279-3

REG. No. 203922

LOOP1

PRESSURE TRANSDUCER CABINET LOOPS

LOOP NUMBER	REGISTRATION NUMBER	LOOP NUMBER	REGISTRATION NUMBER
01-P-0001	204100		
02-P-0001/0002	204101		
04-P-0001/0002	204102		
05-P-0001/0002	204103		
06-P-0001/0002	204104		
07-P-0001/0002	204105		
08-P-0002/0003	204106		
08-P-0005/0006	204107		
08-P-0010/0011	204108		
10-P-0001	204110		
10-P-0002	204111		
11-P-0001	204112		
12-P-0002	204109		

NOTES:

SHIELDING,GROUNDING,CONDUCTOR IDENTIFICATION:

1. MULTICORE TX WIRE TO HAVE INDIVIDUAL PAIR SHIELDS. ALL OTHER SIGNALS UNSHIELDED.
2. ENSURE SHIELD CONTINUITY FROM SOURCE TO RECEIVER THROUGH INTERMEDIATE TERMINALS.
3. GROUND SHIELD AT INSTRUMENT PANEL ONLY. JUMPER ALL SHIELDS PER LOOP. IF RECEIVER AND SOURCE ARE IN FIELD, GROUND SHIELD AT SOURCE INSTRUMENT.
4. INTERNAL WIRING IN PANELS NOT TO BE SHIELDED.
5. ALL OUTER CASES OF INSTRUMENT CASES TO BE GROUNDED.
6. CONDUCTOR IDENTIFICATION:
   a) SIGNAL WIRE - CABLE NUMBER TO USE TAG No. OF SOURCE INSTRUMENT PLUS SERIAL No.-1, -2, etc.
   b) TX WIRE - USE SIGNAL WIRE DESIGNATION FOR CABLE No. AND PAIR No.

SYMBOLS:

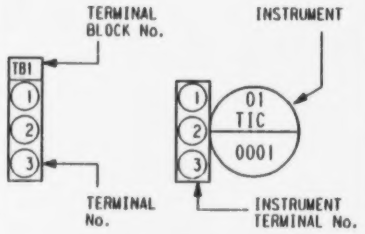

SEE PID,INSTRUMENT SYMBOL SHEET D-3-01-MP-2 FOR INSTRUMENT SYMBOL IDENTIFICATION PER ISA S51.1.

REV	DATE	DESCRIPTION	CHK	MEC APP	EMR APP
01	86.09	PH.I FINAL	LP	RPW	
00	86.07.15	FOR EMR APPROVAL	RPW		✓

Energy,Mines and Resources Canada / Énergie,Mines et Ressources Canada

LIST OF PRESSURE TRANSDUCER CABINET LOOPS

INSTRUMENT LOOP DIAGRAM COVER SHEET

EMR COPROCESSING PILOT PLANT PP3

DRAWN CAD DATE 86.07.03
CHKD
DESIGN
REV 01

Monenco Consultants Limited

WORK ORDER No. DSS 8279-3

REG. No. 204303

LOOP

B

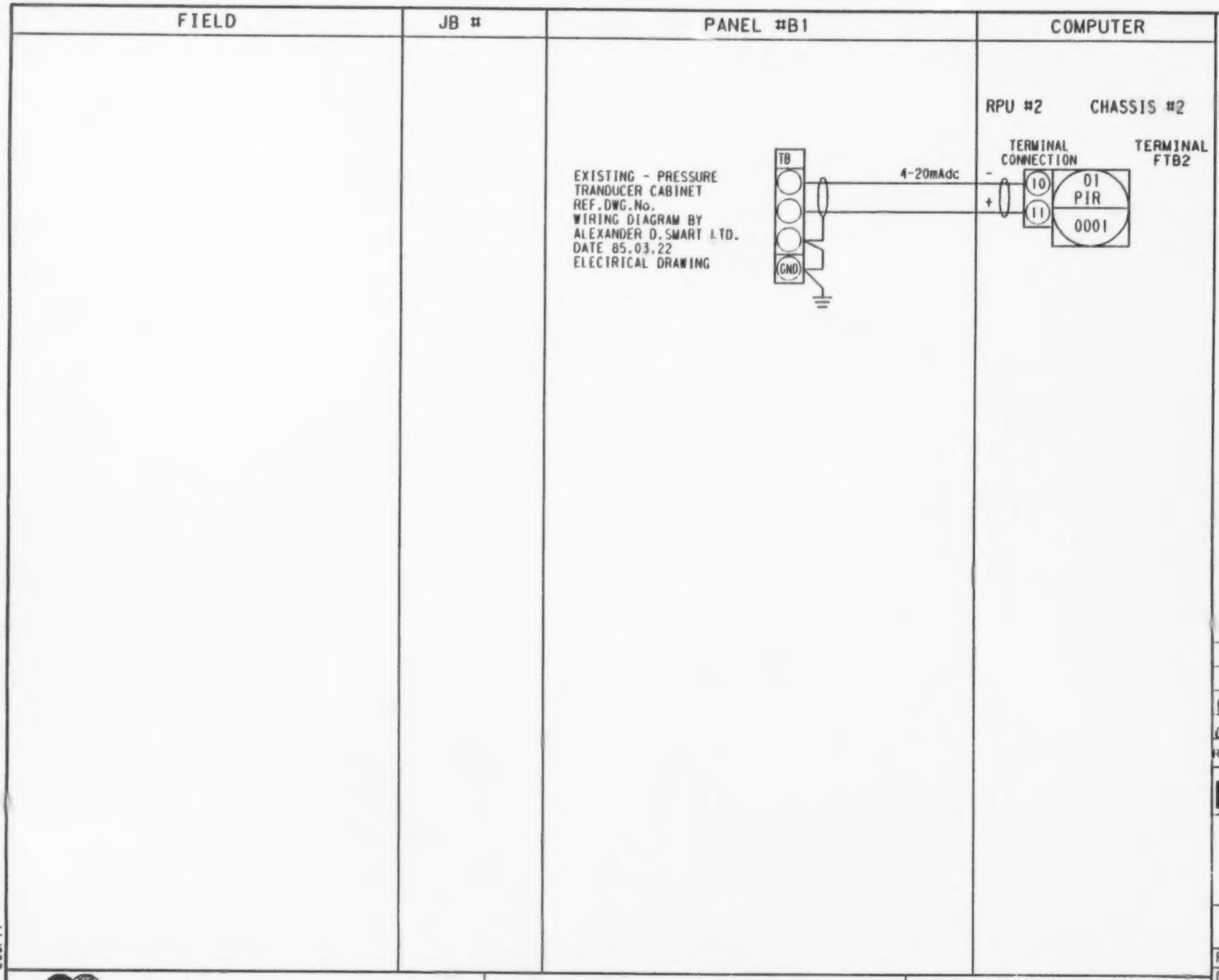

NOTES:

GENERAL NOTES:

A. 24 VAC Power Supply from GFC, Hammond Series Power Supply in panel.

B. 4-20mA signals to computer are shunted by EMR with a resistor to provide voltage signal to computer card.

C. Compatibility of voltage signals to computer programmed by EMR.

REV	DATE	DESCRIPTION	CHK	MEC APP	EMR APP
01	86.09	PH.1 FINAL	CP	RW	
00	86.05.15	FOR EMR APPROVAL	RW		✓

Energy, Mines and Resources Canada / Énergie, Mines et Ressources Canada

LOOP DIAGRAM
01-P-0001
AREA 1
SLURRY FEED

EMR COPROCESSING PILOT PLANT
PP3

PID No.	D-3-1 -MP-1		
DRAWN	CAD	DATE	86.05.15
CHKD		REV	01
DESIGN			

Monenco Consultants Limited | WORK ORDER No. DSS 8279-3 | REG. No. 204100

LOOP17

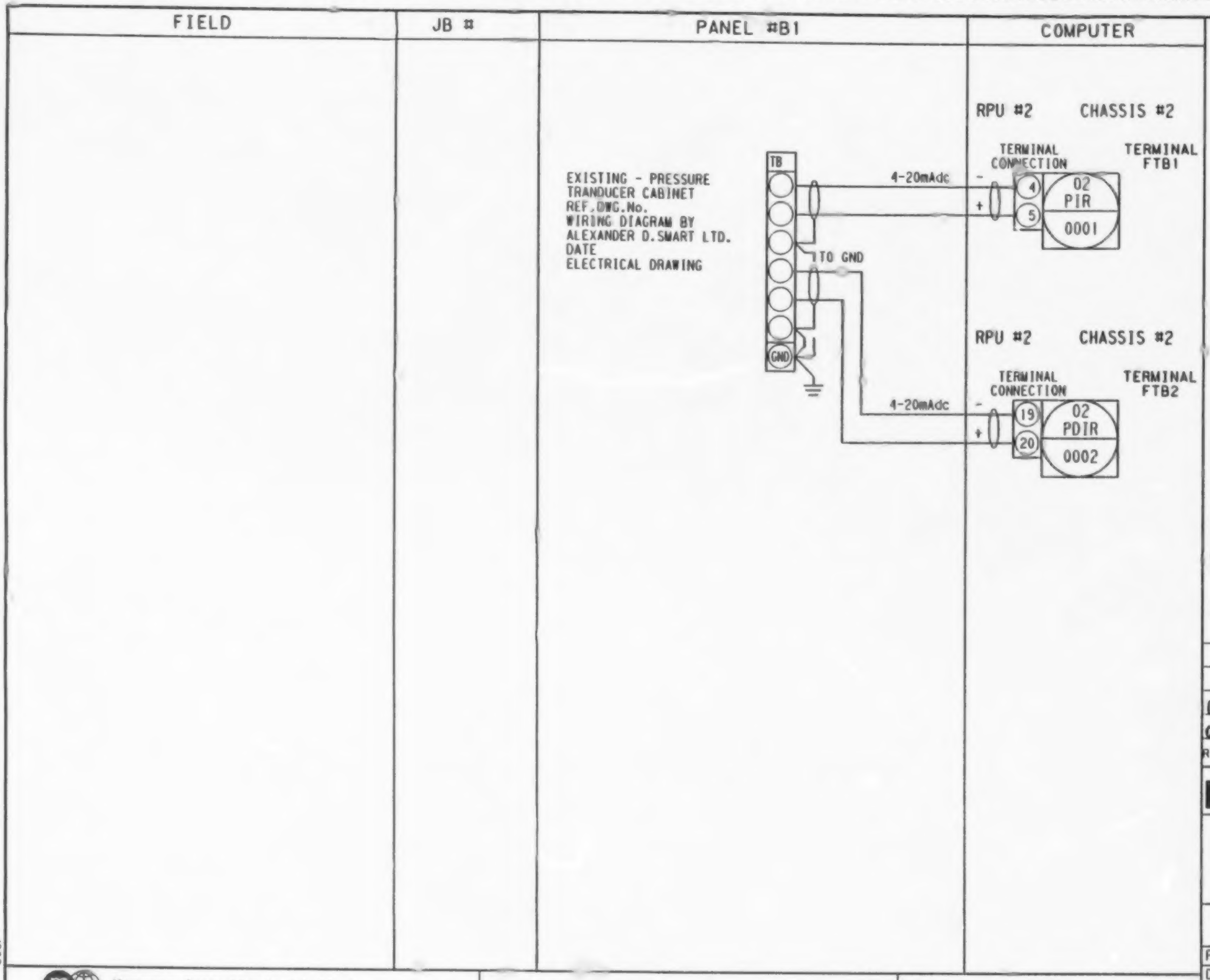

NOTES:

GENERAL NOTES:

A. 24 VAC Power Supply from GFC, Hammond Series Power Supply in panel.

B. 4-20mA signals to computer are shunted by EMR with a resistor to provide voltage signal to computer card.

C. Compatibility of voltage signals to computer programmed by EMR.

REV	DATE	DESCRIPTION	CHK	MEC APP	EMR APP
01	86.09	P&I FINAL		RW	
00	86.07.15	FOR EMR APPROVAL	RW		✓

Energy, Mines and Resources Canada — Énergie, Mines et Ressources Canada

LOOP DIAGRAM
02-P-0001/0002
AREA 2
FEED PREHEAT & DUMP SYSTEM

EMR COPROCESSING PILOT PLANT
PP3

PID No. D-3-2 -MP-1

DRAWN	CAD	DATE	86.05.15
CHKD		REV	01
DESIGN			

Monenco Consultants Limited

WORK ORDER No. DSS 8279-3

REG. No. 204101

LOOP

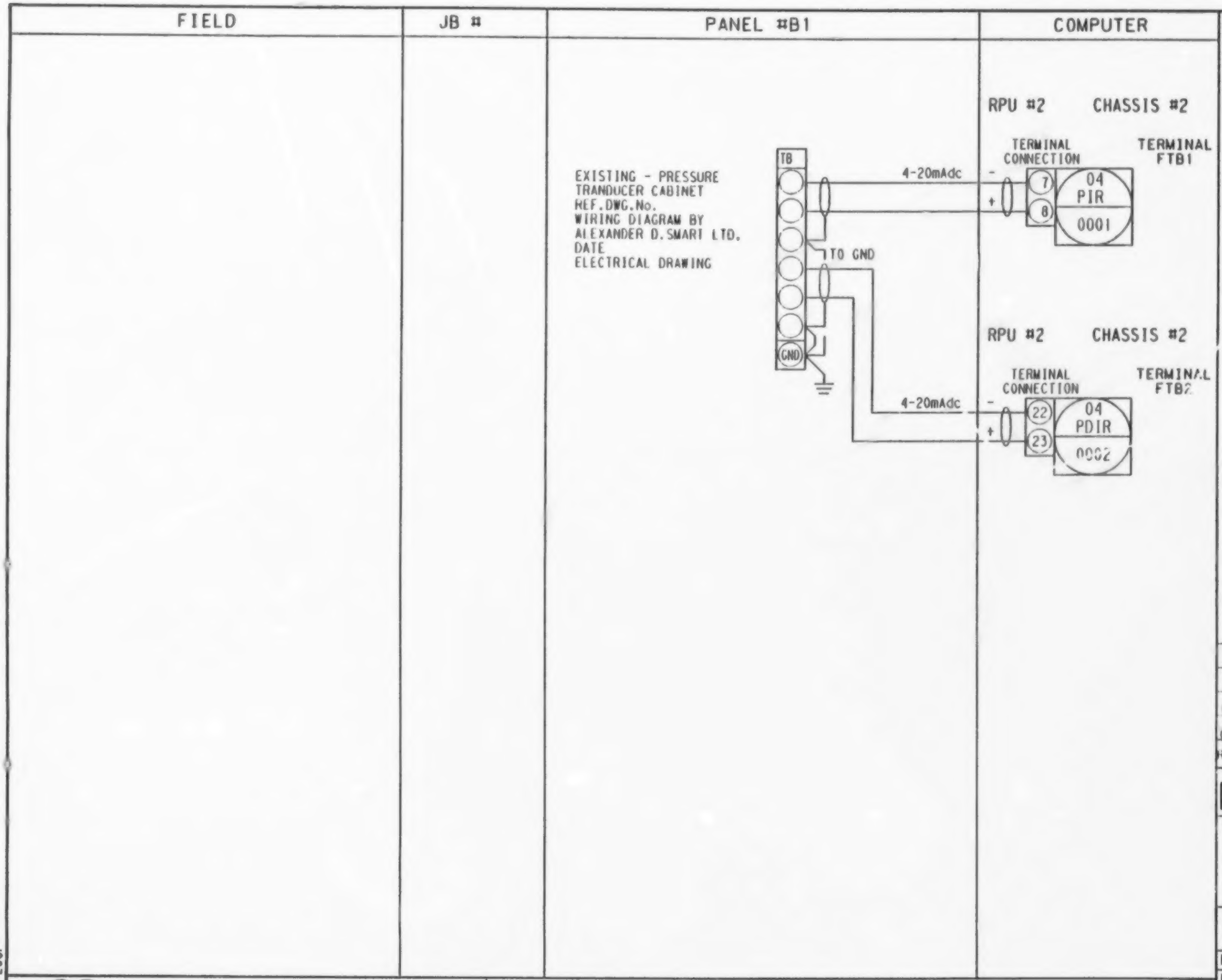

NOTES:

GENERAL NOTES:

A. 24 VAC Power Supply from GFC, Hammond Series Power Supply in panel.

B. 4-20mA signals to computer are shunted by EMR with a resistor to provide voltage signal to computer card.

C. Compatibility of voltage signals to computer programmed by EMR.

REV	DATE	DESCRIPTION	CHK	MEC APP	EMR APP
01	86.09	PH.I FINAL	CP	RAJ	
00	86.07.15	FOR EMR APPROVAL	RAJ		✓

Energy, Mines and Resources Canada / Énergie, Mines et Ressources Canada

LOOP DIAGRAM
04-P-0001/0002
AREA 4
HEAVY OIL SYSTEM

EMR COPROCESSING PILOT PLANT
PP3

PID No. D-3-4 -MP-1
DRAWN | CAD | DATE 86.05.15
CHKD
DESIGN
REV 01

LOOP

Monenco Consultants Limited

WORK ORDER No. DSS 8279-3

REG. No. 204102

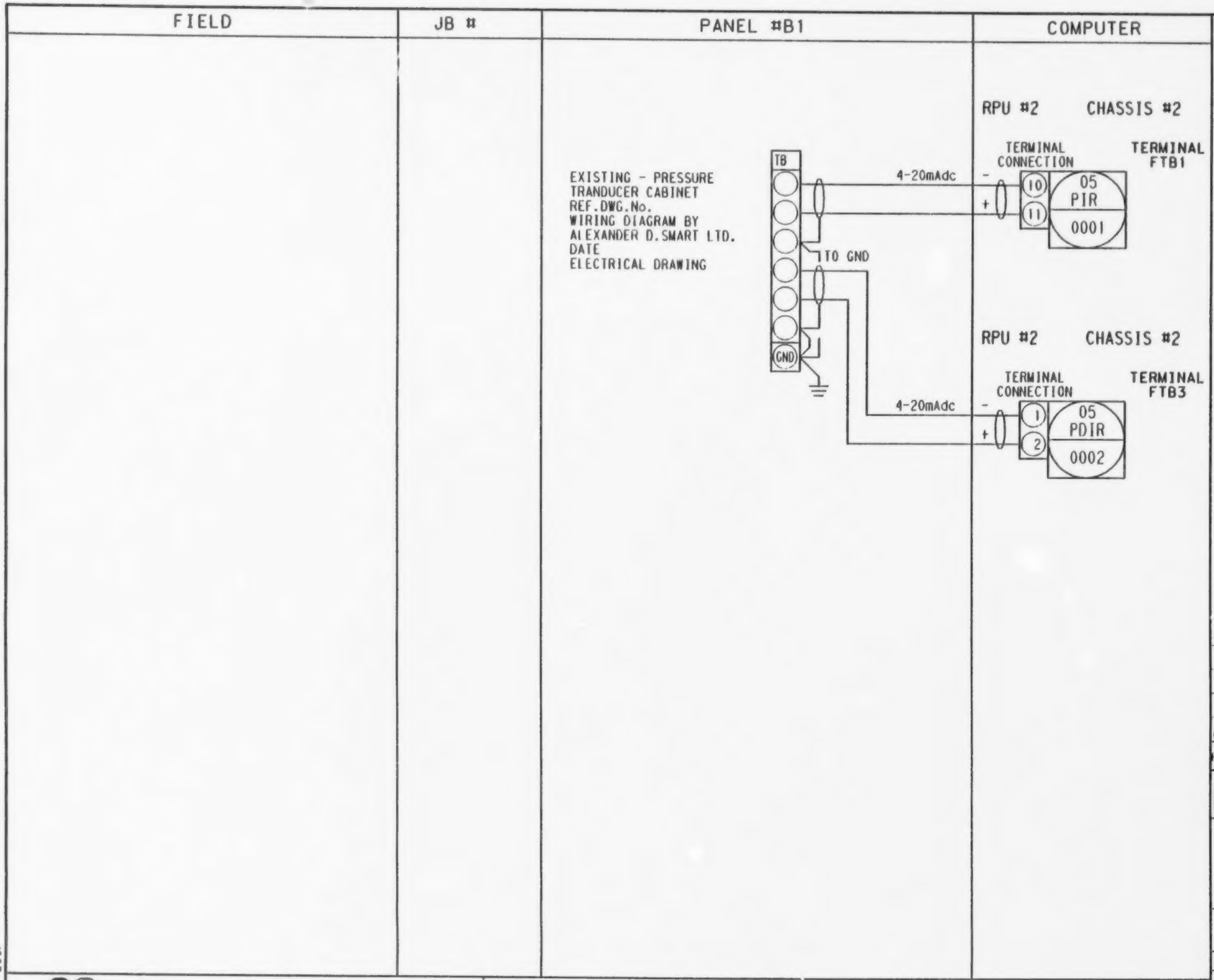

NOTES:

GENERAL NOTES:

A. 24 VAC Power Supply from GFC, Hammond Series Power Supply in panel.

B. 4-20mA signals to computer are shunted by EMR with a resistor to provide voltage signal to computer card.

C. Compatibility of voltage signals to computer programmed by EMR.

REV	DATE	DESCRIPTION	CHK	MEC APP	EMR APP
01	86.09	PH.1 FINAL	CP	[illegible]	
00	86.07.15	FOR EMR APPROVAL	[illegible]		✓

Energy, Mines and Resources Canada — Énergie, Mines et Ressources Canada

LOOP DIAGRAM
05-P-0001/0002
AREA 5
HEAVY OIL SYSTEM

EMR COPROCESSING PILOT PLANT PP3

PID No.	D-3-5 -MP-1		
DRAWN	CAD	DATE	86.05.15
CHKD			REV
DESIGN			01

Monenco Consultants Limited

WORK ORDER No. DSS 8279-3

REG. No. 204103

LOOP

B

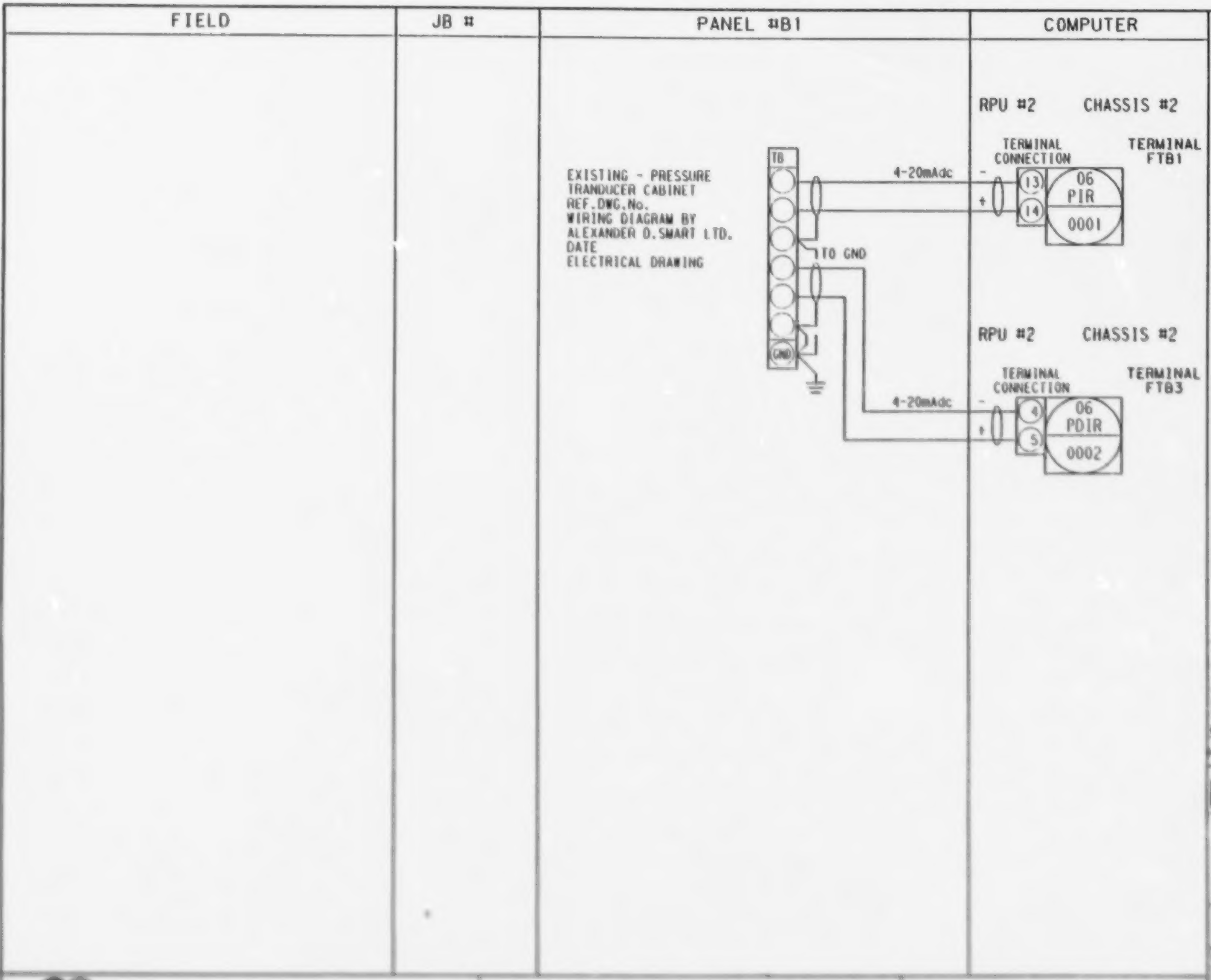

NOTES:

GENERAL NOTES:

A. 24 VAC Power Supply from GFC, Hammond Series Power Supply in panel.

B. 4-20mA signals to computer are shunted by EMR with a resistor to provie voltage signal to computer card.

C. Compatibility of voltage signals b computer programmed by EMR.

REV	DATE	DESCRIPTION	CHK	MEC APP	EMR APP
01	86.09	All FINAL			
00		For EMR APPROVAL			

Energy, Mines and Resources Canada — Énergie, Mines et Ressources Canada

LOOP DIAGRAM
06-P-0001/0002
AREA 6
WATER SCRUBBER SYSTEM

EMR COPROCESSING PILOT PLAIT
PP3

P&ID No. D-3-6 -MP-1

Monenco Consultants Limited

WORK ORDER No. DSS 8279-3

REG. No. 204104

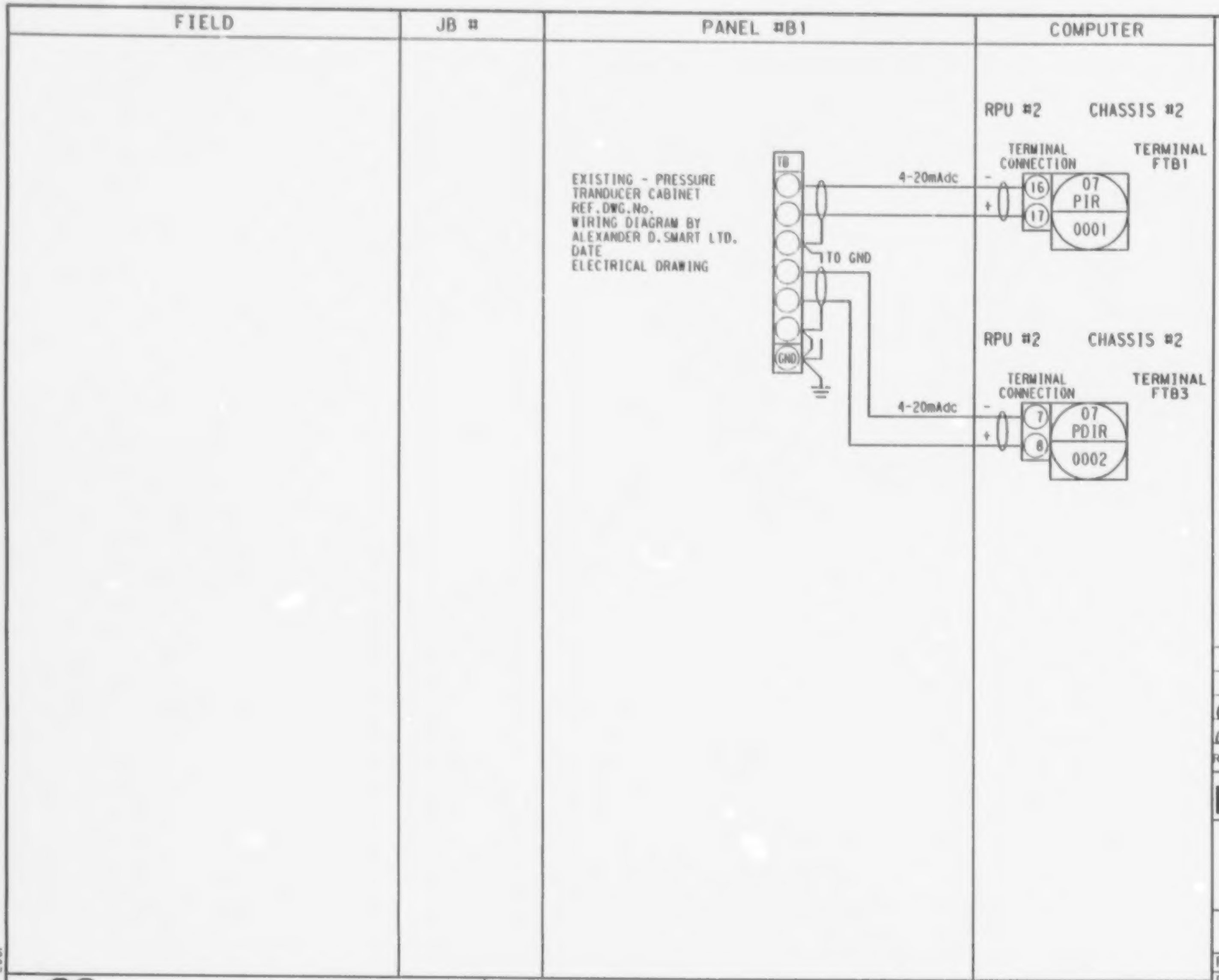

NOTES:

GENERAL NOTES:

A. 24 VAC Power Supply from GFC, Hammond Series Power Supply in panel.

B. 4-20mA signals to computer are shunted by EMR with a resistor to provide voltage signal to computer card.

C. Compatibility of voltage signals to computer programmed by EMR.

REV	DATE	DESCRIPTION	CHK	MEC APP	EMR APP
01	86.09	PH.I FINAL			
00	86.07.15	FOR EMR APPROVAL			✓

Energy, Mines and Resources Canada — Énergie, Mines et Ressources Canada

LOOP DIAGRAM
07-P-0001/0002
AREA 7
OIL SCRUBBER SYSTEM

EMR COPROCESSING PILOT PLANT PP3

PID No.	D-3-7 -MP-1		
DRAWN	CAD	DATE	86.05.15
CHKD		REV	01
DESIGN			

Monenco Consultants Limited

WORK ORDER No. DSS 8279-3

REG. No. 204105

LOOP

B

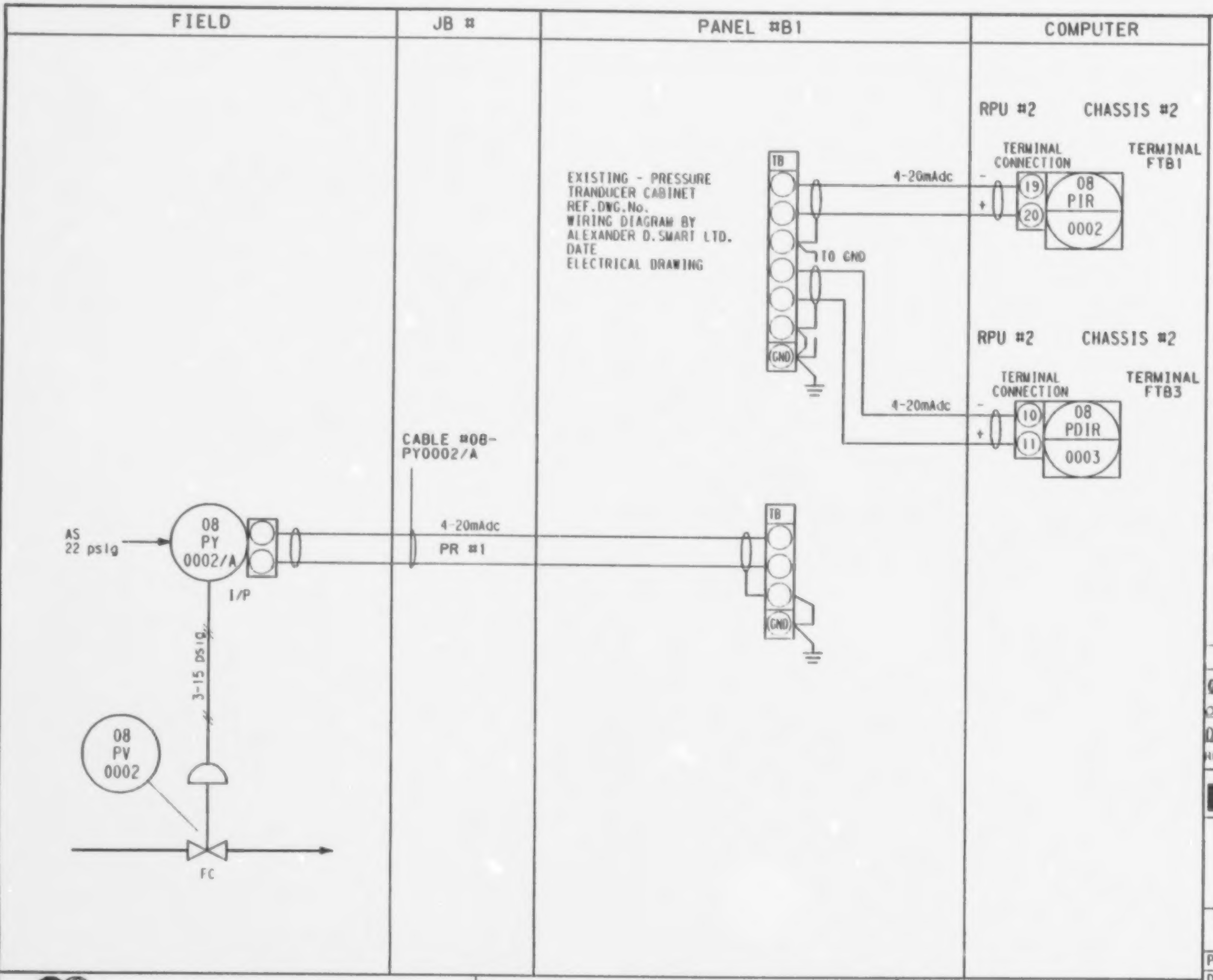

NOTES:

GENERAL NOTES:

A. 24 VAC Power Supply from GFC, Hammond Series Power Supply in panel.

B. 4-20mA signals to computer are shunted by EMR with a resistor to provide voltage signal to computer card.

C. Compatibility of voltage signals to computer programmed by EMR.

REV	DATE	DESCRIPTION	CHK	MEC APP	EMR APP
02	86.09	PH.I FINAL	GP	RDW	
01	86.07.30	TITLE REVISED	RAW		
00	86.07.15	FOR EMR APPROVAL	RAW		✓

Energy, Mines and Resources Canada / Énergie, Mines et Ressources Canada

LOOP DIAGRAM

08-P-0002/0003

AREA 8

RECYCLE GAS SYSTEM

EMR COPROCESSING PILOT PLANT PP3

PID No.		D-3-8 -MP-1	
DRAWN	CAD	DATE	86.05.15
CHKD			REV
DESIGN			02

Monenco Consultants Limited

WORK ORDER No. DSS 8279-3

REG. No. 204106

LOOP

B

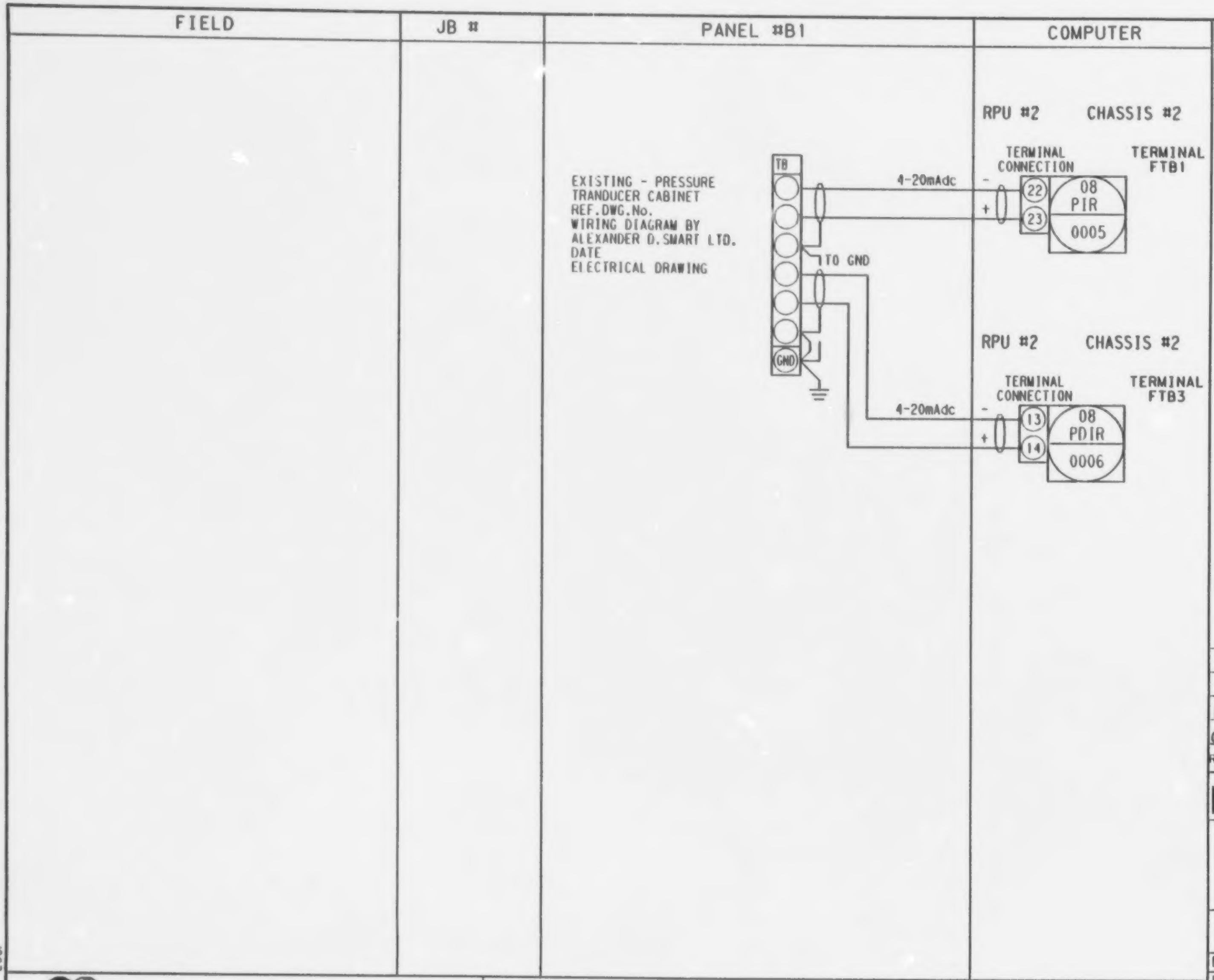

NOTES:

GENERAL NOTES:

A. 24 VAC Power Supply from GFC, Hammond Series Power Supply in panel.

B. 4-20mA signals to computer are shunted by EMR with a resistor to provide voltage signal to computer card.

C. Compatibility of voltage signals to computer programmed by EMR.

REV	DATE	DESCRIPTION	CHK	MEC APP	EMR APP
01	86.09	PH.1 FINAL	CP	RAJ	
00	86.07.15	FOR EMR APPROVAL	RAJ		✓

Energy, Mines and Resources Canada — Énergie, Mines et Ressources Canada

LOOP DIAGRAM
08-P-0005/0006
AREA 8
RECYCLE GAS SYSTEM

EMR COPROCESSING PILOT PLANT
PP3

PID No.	D-3-8 -MP-1	
DRAWN	CAD	DATE 86.05.15
CHKD		REV
DESIGN		01

Monenco Consultants Limited

WORK ORDER No. DSS 8279-3

REG. No. 204107

LOOP

B

FIELD	JB #	PANEL #B1	COMPUTER	NOTES:

EXISTING - PRESSURE
TRANDUCER CABINET
REF.DWG.No.
WIRING DIAGRAM BY
ALEXANDER D.SMART LTD.
DATE
ELECTRICAL DRAWING

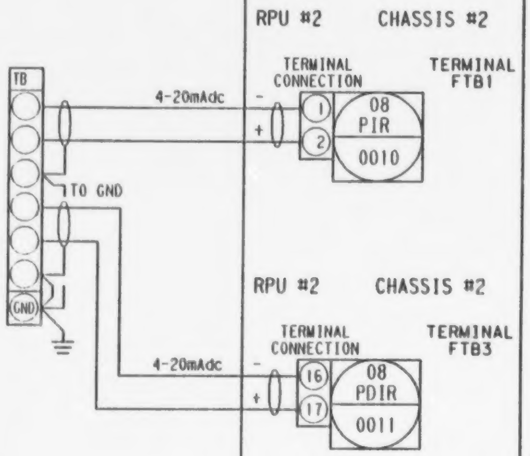

GENERAL NOTES:

A. 24 VAC Power Supply from GFC, Hammond Series Power Supply in panel.

B. 4-20mA signals to computer are shunted by EMR with a resistor to provide voltage signal to computer card.

C. Compatibility of voltage signals to computer programmed by EMR.

REV	DATE	DESCRIPTION	CHK	MEC APP	EMR APP
01	86.09	PH.I FINAL	CP	RAJ	
00	86.07.15	FOR EMR APPROVAL	RAJ		✓

Energy, Mines and Resources Canada — Énergie, Mines et Ressources Canada

LOOP DIAGRAM
08-P-0010/0011
AREA 8
RECYCLE GAS SYSTEM

EMR COPROCESSING PILOT PLANT
PP3

PID No.	D-3-8 -MP-1		
DRAWN	CAD	DATE	86.05.15
CHKD		REV	01
DESIGN			

Monenco Consultants Limited | WORK ORDER No. DSS 8279-3 | REG. No. 204108

LOOP

FIELD	JB #	PANEL #B1	COMPUTER	NOTES:
		EXISTING - PRESSURE TRANDUCER CABINET REF.DWG.No. WIRING DIAGRAM BY ALEXANDER D.SMART LTD. DATE ELECTRICAL DRAWING	RPU #2 CHASSIS #2	

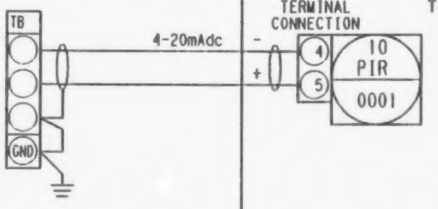

GENERAL NOTES:

A. 24 VAC Power Supply from GFC, Hammond Series Power Supply in panel.

B. 4-20mA signals to computer are shunted by EMR with a resistor to provide voltage signal to computer card.

C. Compatibility of voltage signals to computer programmed by EMR.

REV	DATE	DESCRIPTION	CHK	MEC APP	EMR APP
01	86.09	PH.I FINAL	GP	RAW	
00	86.07.15	FOR EMR APPROVAL	RAW		✓

Energy, Mines and Resources Canada — Énergie, Mines et Ressources Canada

LOOP DIAGRAM
10-P-0001
AREA 10
HYDROGEN SUPPLY SYSTEM

EMR COPROCESSING PILOT PLANT
PP3

PID No.	D-3-10-MP-1		
DRAWN	CAD	DATE	86.07.03
CHKD		REV	01
DESIGN			

Monenco Consultants Limited

WORK ORDER No. DSS 8279-3

REG. No. 204110

LOOP17

B

FIELD	JB #	PANEL #B1	COMPUTER
		EXISTING - PRESSURE TRANDUCER CABINET REF.DWG.No. WIRING DIAGRAM BY ALEXANDER D.SMA'; LTD. DATE ELECIRICAL DRAWING	RPU #2 CHASSIS #2

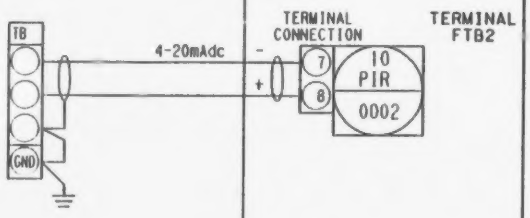

NOTES:

GENERAL NOTES:

A. 24 VAC Power Supply from GFC, Hammond Series Power Supply in panel.

B. 4-20mA signals to computer are shunted by EMR with a resistor to provide voltage signal to computer card.

C. Compatibility of voltage signals to computer programmed by EMR.

REV	DATE	DESCRIPTION	CHK	MEC APP	EMR APP
01	86.09	PH.1 FINAL	CP	RPL	
00	86.07.05	FOR EMR APPROVAL	RPL		✓

Energy, Mines and Resources Canada — Énergie, Mines et Ressources Canada

LOOP DIAGRAM
10-P-0002
AREA 10
HYDROGEN SUPPLY SYSTEM

EMR COPROCESSING PILOT PLANT
PP3

PID No.	D-3-10-MP-1
DRAWN	CAD
DATE	86.07.03
CHKD	
DESIGN	
REV	01

Monenco Consultants Limited

WORK ORDER No. DSS 8279-3

REG. No. 204111

LOOP17

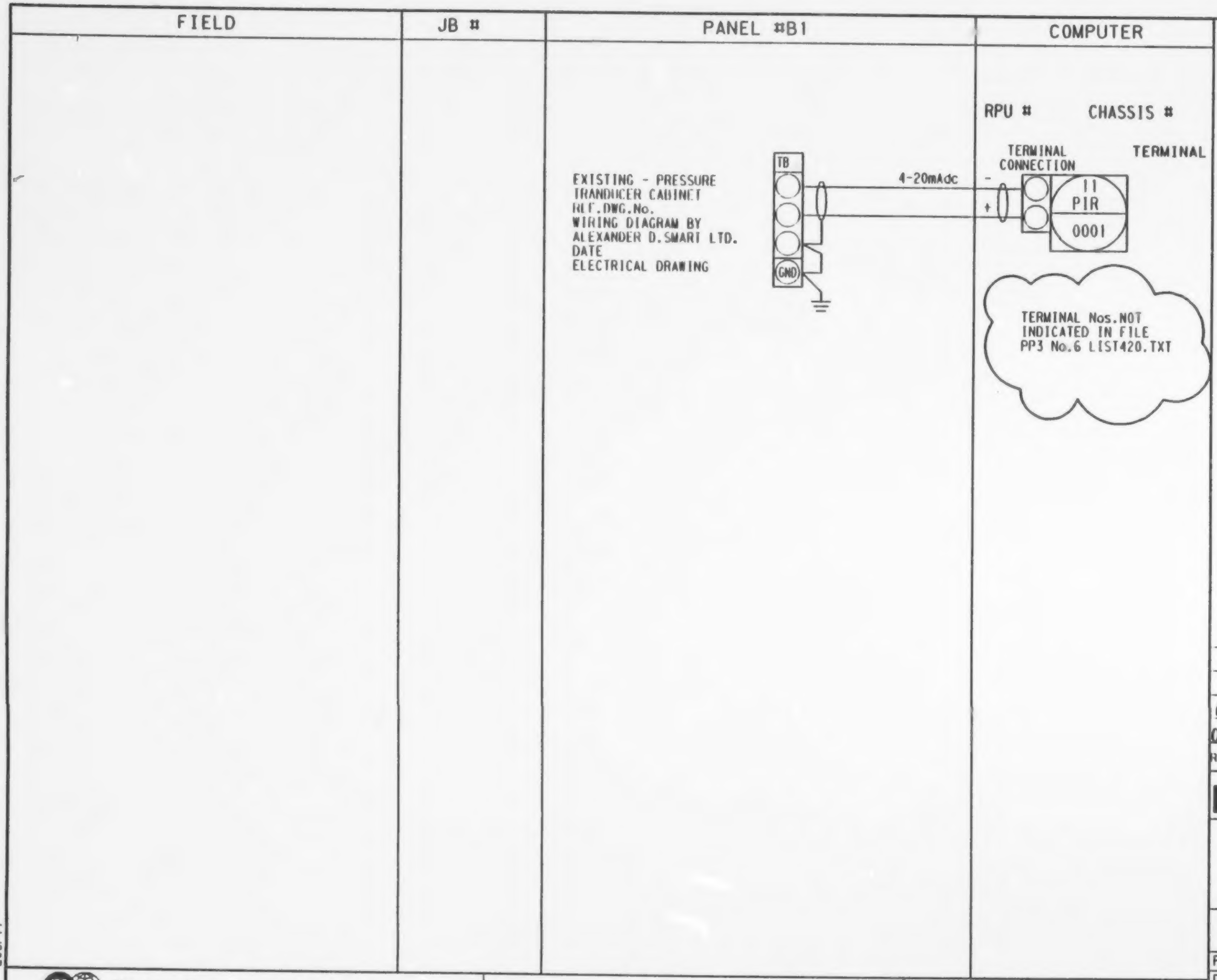

NOTES:

GENERAL NOTES:

A. 24 VAC Power Supply from GFC, Hammond Series Power Supply in panel.

B. 4-20mA signals to computer are shunted by EMR with a resistor to provide voltage signal to computer card.

C. Compatibility of voltage signals to computer programmed by EMR.

REV	DATE	DESCRIPTION	CHK	MEC APP	EMR APP
01	86.09	PH.1 FINAL			
00	86.07.15	FOR EMR APPROVAL			✓

Energy, Mines and Resources Canada / Énergie, Mines et Ressources Canada

LOOP DIAGRAM
11-P-0001
AREA 11
OIL & VARSOL PURGE SYSTEM

EMR COPROCESSING PILOT PLANT
PP3

PID No.	D-3-11-MP-1
DRAWN	CAD DATE 86.07.11
CHKD	REV
DESIGN	01

Monenco Consultants Limited | WORK ORDER No. DSS 8279-3 | REG. No. 204112

LOOP17

FIELD	JB #	PANEL #B1	COMPUTER
		EXISTING - PRESSURE TRANDUCER CABINET REF.DWG.No. WIRING DIAGRAM BY ALEXANDER D.SMART LTD. DATE ELECTRICAL DRAWING	RPU #2 CHASSIS #2

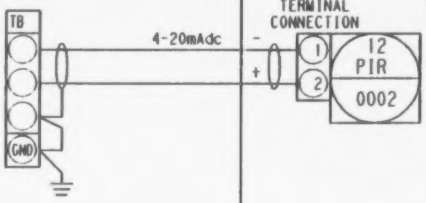

NOTES:

GENERAL NOTES:

A. 24 VAC Power Supply from GFC, Hammond Series Power Supply in panel.

B. 4-20mA signals to computer are shunted by EMR with a resistor to provide voltage signal to computer card.

C. Compatibility of voltage signals to computer programmed by EMR.

REV	DATE	DESCRIPTION	CHK	MEC APP	EMR APP
01	86.0?	PH.I FINAL			
00	86.01.15	FOR EMR APPROVAL			✓

Energy, Mines and Resources Canada / Énergie, Mines et Ressources Canada

LOOP DIAGRAM
12-P-0002
AREA 12
HYDROGEN PURGE SYSTEM

EMR COPROCESSING PILOT PLANT PP3

PID No.	D-3-12-MP-1
DRAWN	CAD DATE 86.07.03
CHKD	REV 01
DESIGN	

Monenco Consultants Limited — WORK ORDER No. DSS 8279-3 — REG. No. 204109

LOOP17

HAND SWITCH LOOPS

LOOP NUMBER	REGISTRATION NUMBER	LOOP NUMBER	REGISTRATION NUMBER
01-H-0005/01-Z-0004	204130	04-H-0001/0002	204045
01-H-0007/01-Z-0005	204131	04-H-0003/0004	204046
01-H-0008/01-Z-0006	204132	04-H-0005/0006	204047
01-H-0009/01-Z-0007	204133	04-H-0007/0008	204048
01-H-0010/01-Z-0008	204134	04-H-0009/0010	204049
01-H-0015/01-Z-0012	204135	04-H-0011	204050
01-H-0017/01-Z-0013	204136		
01-H-0018/01-Z-0014	204137	05-H-0001/0002	204051
01-H-0019/01-Z-0015	204138	05-H-0003/0004	204052
01-H-0020/01-Z-0016	204139	05-H-0005	204053
02-H-0001/0002	204042	08-H-0001/0002	204054
02-H-0003/0004	204043	08-H-0003/0004	204055
02-H-0005/0006	204044	08-H-0005/0006	204056
03-H-0068/0070	204037	10-H-0004	204075
03-H-0072	204038	10-H-0008	204071
03-H-0074/0076	204039	10-H-0009	204072
03-H-0078/0079	204040	10-H-0010	204073
03-H-0080/0082	204041	10-H-0011	204074
03-H-0003/0004	204057		
03-H-0005/0011	204058	12-H-0001	204076
03-H-0012/0013	204059		
03-H-0019/0020	204060	13-H-0001	204172
03-H-0021	204061	13-H-0002	204173
03-H-0028/0029	204062	13-H-0003	204174
03-H-0030/0036	204063	13-H-0004	204175
03-H-0037/0038	204064		
03-H-0044/0045	204065		
03-H-0046/0048	204066		
03-H-0049/0050	204067		
03-H-0053/0054	204068		
03-H-0055/0061	204069		
03-H-0062/0063	204070		

NOTES:

SHIELDING, GROUNDING, CONDUCTOR IDENTIFICATION:

1. MULTICORE TX WIRE TO HAVE INDIVIDUAL PAIR SHIELDS. ALL OTHER SIGNALS UNSHIELDED.
2. ENSURE SHIELD CONTINUITY FROM SOURCE TO RECEIVER THROUGH INTERMEDIATE TERMINALS.
3. GROUND SHIELD AT INSTRUMENT PANEL ONLY. JUMPER ALL SHIELDS PER LOOP. IF RECEIVER AND SOURCE ARE IN FIELD, GROUND SHIELD AT SOURCE INSTRUMENT.
4. INTERNAL WIRING IN PANELS NOT TO BE SHIELDED.
5. ALL OUTER CASES OF INSTRUMENT CASES TO BE GROUNDED.
6. CONDUCTOR IDENTIFICATION:
   a) SIGNAL WIRE - CABLE NUMBER TO USE TAG No. OF SOURCE INSTRUMENT PLUS SERIAL No. -1, -2, etc.
   b) TX WIRE - USE SIGNAL WIRE DESIGNATION FOR CABLE No. AND PAIR No.

SYMBOLS:

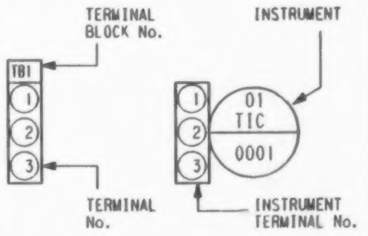

SEE PID, INSTRUMENT SYMBOL SHEET D-3-01-MP-2 FOR INSTRUMENT SYMBOL IDENTIFICATION PER ISA S51.1.

REV	DATE	DESCRIPTION	CHK	MEC APP	EMR APP
01	86.09	PH.1 FINAL	GP	RAW	
00	86.07.16	FOR EMR APPROVAL	RAW		✓

Energy, Mines and Resources Canada | Énergie, Mines et Ressources Canada

LIST OF HAND SWITCH LOOPS

INSTRUMENT LOOP DIAGRAM COVER SHEET

EMR COPROCESSING PILOT PLANT PP3

DRAWN	CAD	DATE 86.07.03
CHKD		REV 01
DESIGN		

Monenco Consultants Limited | WORK ORDER No. DSS 8279-3 | REG. No. 204304

LOOP

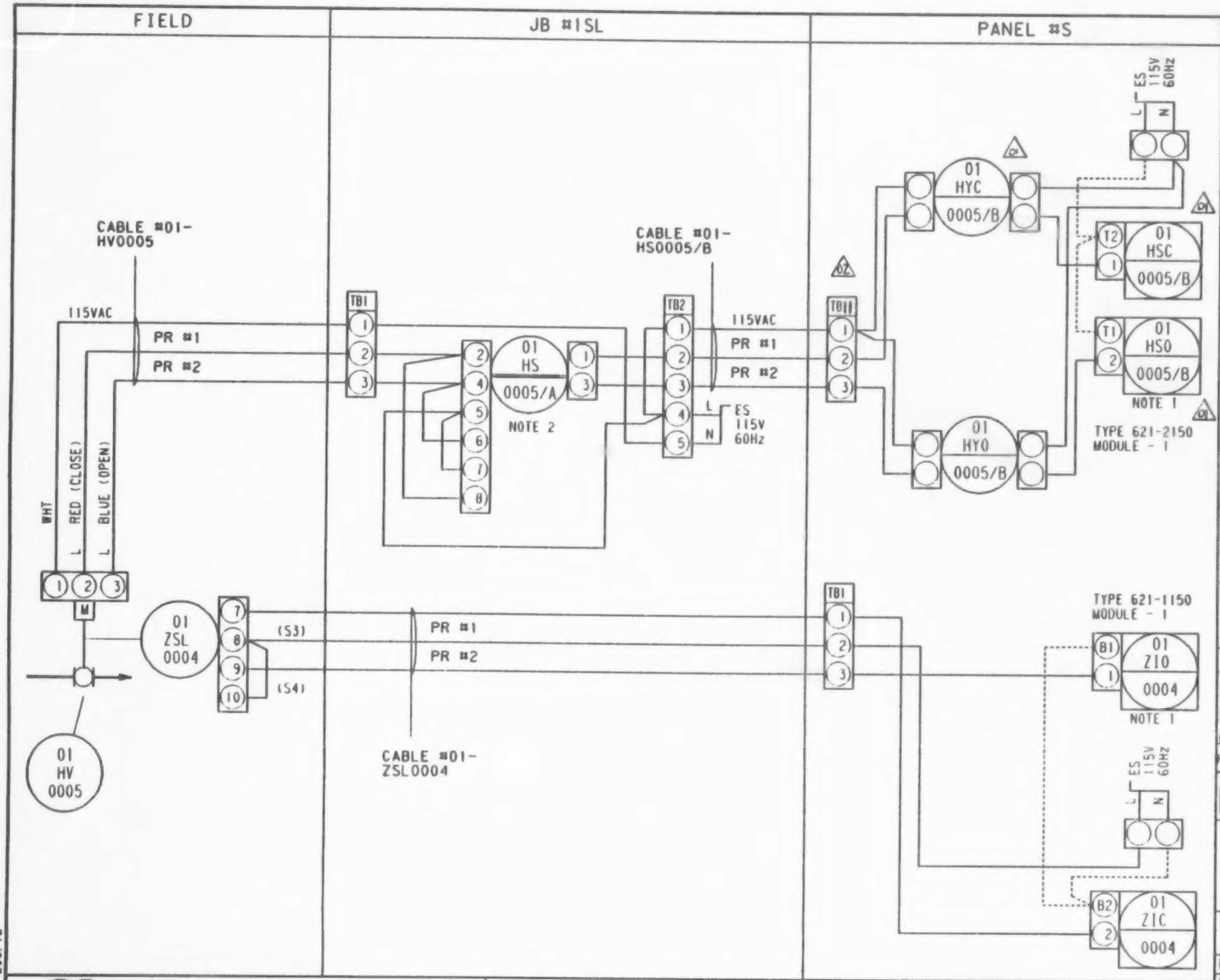

NOTES:

1. HONEYWELL PLC CONTACTS.
------------ INDICATES INTERNAL JUMPERS
2. CLOSE/OPEN/PLC HAND SELECTOR POSITIONS:

OPEN
CLOSE PLC

	CLOSE	OPEN	PLC
1–2			X
3–4			X
5–6		X	
7–8	X		

GENERAL NOTES:

A. 24 VAC Power Supply from GFC, Hammond Series Power Supply in panel.

B. 4-20mA signals to computer are shunted by EMR with a resistor to provide voltage signal to computer card.

C. Compatibility of voltage signals to computer programmed by EMR.

REV	DATE	DESCRIPTION	CHK	MEC APP	EMR APP
03	86.09	PH.4 FINAL	CP	RW	
02	86.08.21	TERMINAL BLOCK #	CP		
01	86.07.29	INSTRUMENT SYMBOLS CHANGED	RPW		
00	86.07.25	FOR EMR APPROVAL	RPW		✓

Energy, Mines and Resources Canada — Énergie, Mines et Ressources Canada

LOOP DIAGRAM
01-H-0005/01-Z-0004
AREA 1
SLURRY FEED SYSTEM

EMR COPROCESSING PILOT PLANT
PP3

PID No.	D-3-1 -MP-1
DRAWN CAD	DATE 86.07.03
CHKD	REV
DESIGN	03

Monenco Consultants Limited | WORK ORDER No. DSS 8279-3 | REG. No. 204130

LOOP16

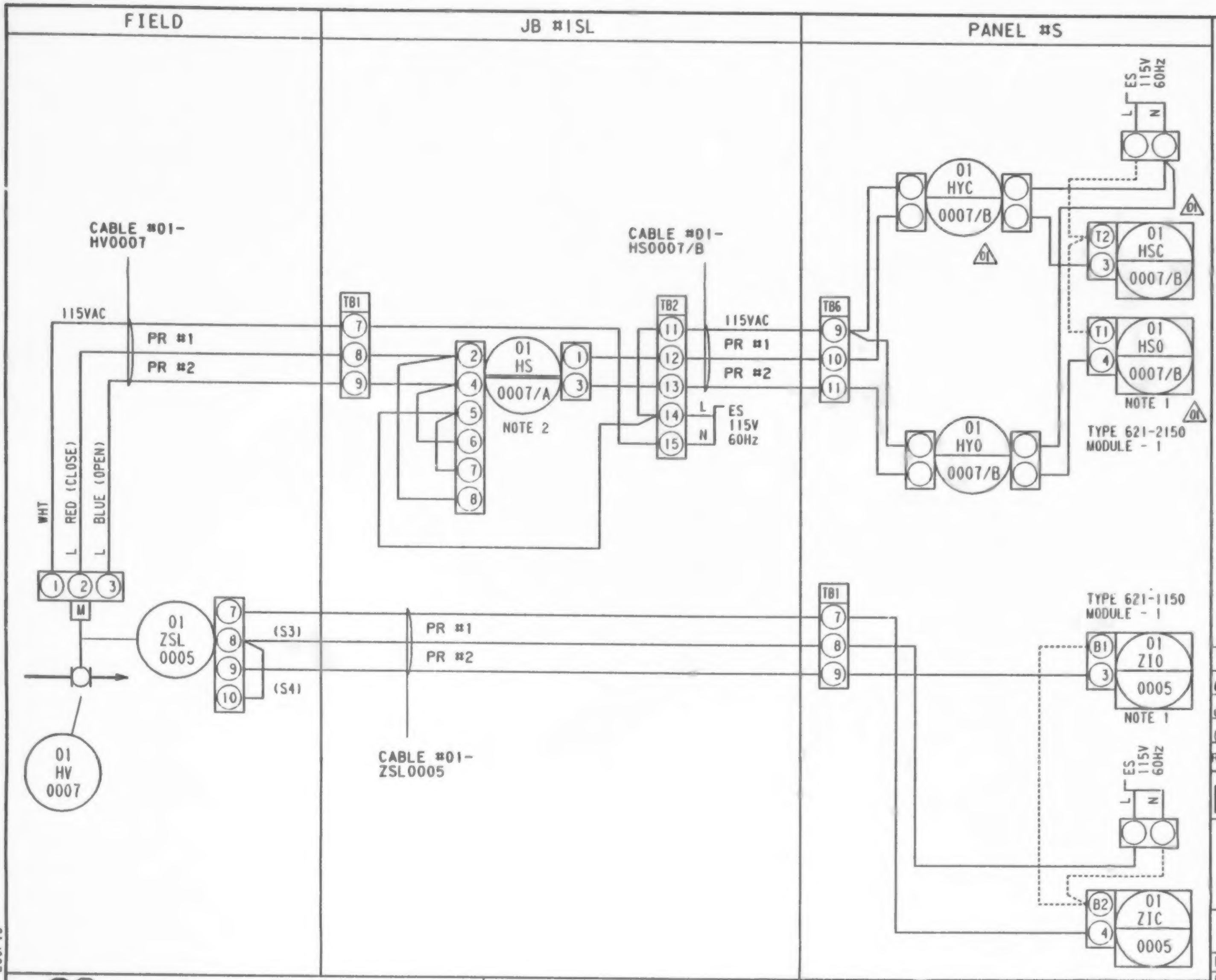

NOTES:

1. HONEYWELL PLC CONTACTS.
   ------------ INDICATES INTERNAL JUMPERS
2. CLOSE/OPEN/PLC HAND SELECTOR POSITIONS:

CLOSE — OPEN — PLC

	CLOSE	OPEN	PLC
1–2			X
3–4			X
5–6		X	
7–8	X		

GENERAL NOTES:

A. 24 VAC Power Supply from GFC, Hammond Series Power Supply in panel.

B. 4-20mA signals to computer are shunted by EMR with a resistor to provide voltage signal to computer card.

C. Compatibility of voltage signals to computer programmed by EMR.

REV	DATE	DESCRIPTION	CHK	MEC APP	EMR APP
02	86.09	PH.1 FINAL	CP	RPW	
01	86.07.30	INSTRUMENT SYMBOLS CHANGED	RPW		
00	86.07.25	FOR EMR APPROVAL	RPW		✓

Energy, Mines and Resources Canada — Énergie, Mines et Ressources Canada

LOOP DIAGRAM
01-H-0007/01-Z-0005
AREA 1
SLURRY FEED SYSTEM

EMR COPROCESSING PILOT PLANT
PP3

PID No. D-3-1 -MP-1
DRAWN CAD DATE 86.07.03
CHKD
DESIGN
REV 02

LOOP16

Monenco Consultants Limited

WORK ORDER No. DSS 8279-3

REG. No. 204131

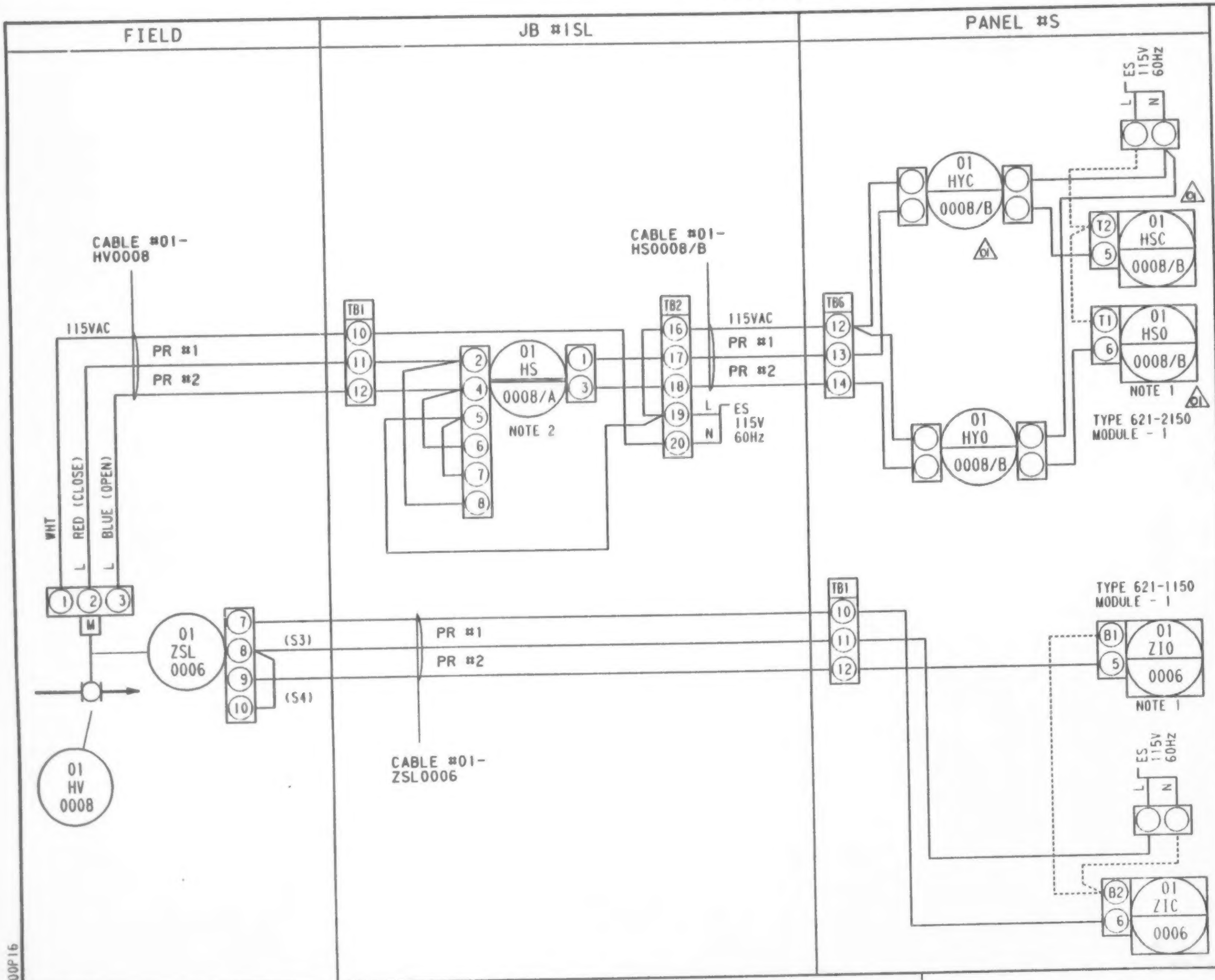

NOTES:

1. HONEYWELL PLC CONTACTS.
   ----------- INDICATES INTERNAL JUMPERS
2. CLOSE/OPEN/PLC HAND SELECTOR POSITIONS:

CLOSE OPEN PLC

	CLOSE	OPEN	PLC
1–2			X
3–4			X
5–6		X	
7–8	X		

GENERAL NOTES:

A. 24 VAC Power Supply from GFC, Hammond Series Power Supply in panel.

B. 4-20mA signals to computer are shunted by EMR with a resistor to provide voltage signal to computer card.

C. Compatibility of voltage signals to computer programmed by EMR.

REV	DATE	DESCRIPTION	CHK	MEC APP	EMR APP
02	86.09	PH.1 FINAL	CP	RAW	
01	86.07.29	INSTRUMENT SYMBOLS CHANGED	RAW		
00	86.07.25	FOR EMR APPROVAL	KPW		✓

Energy, Mines and Resources Canada / Énergie, Mines et Ressources Canada

LOOP DIAGRAM
01-H-0008/01-Z-0006
AREA 1
SLURRY FEED SYSTEM

EMR COPROCESSING PILOT PLANT
PP3

PID No. D-3-1 -MP-1
DRAWN CAD DATE 86.07.03
CHKD
DESIGN
REV 02

Monenco Consultants Limited | WORK ORDER No. DSS 8279-3 | REG. No. 204132

LOOP16

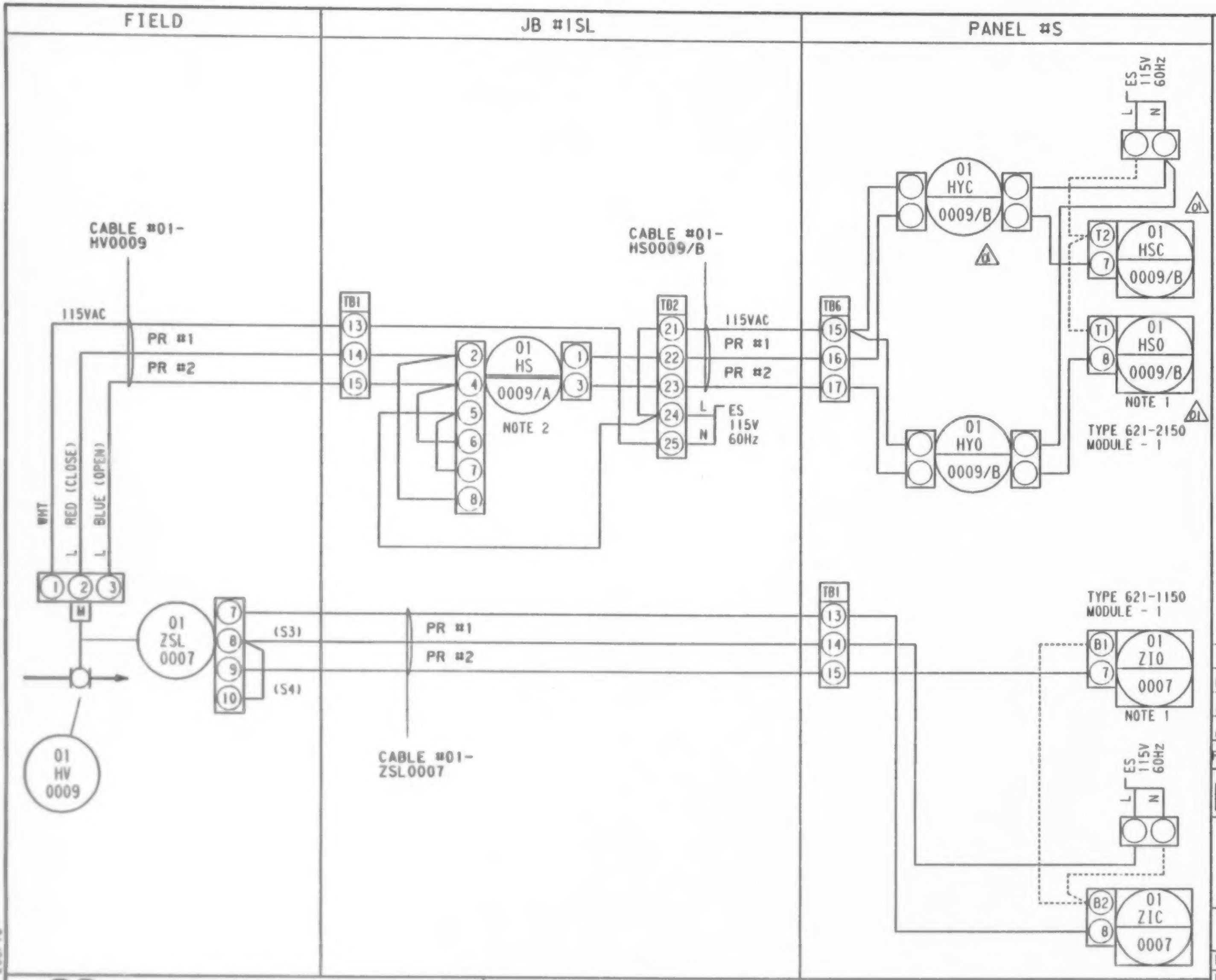

NOTES:

1. HONEYWELL PLC CONTACTS.
------------ INDICATES INTERNAL JUMPERS
2. CLOSE/OPEN/PLC HAND SELECTOR POSITIONS:

OPEN
CLOSE PLC

	CLOSE	OPEN	PLC
1 2			X
3 4			X
5 6		X	
7 8	X		

GENERAL NOTES:

A. 24 VAC Power Supply from GFC, Hammond Series Power Supply in panel.

B. 4-20mA signals to computer are shunted by EMR with a resistor to provide voltage signal to computer card.

C. Compatibility of voltage signals to computer programmed by EMR.

REV	DATE	DESCRIPTION	CHK	MEC APP	EMR APP
02	86.09	PH.1 FINAL		RPW	
01	86.07.29	INSTRUMENT SYMBOL CHANGED	RPW		
00	86.01.25	FOR EMR APPROVAL	RPW		✓

Energy, Mines and Resources Canada — Énergie, Mines et Ressources Canada

LOOP DIAGRAM
01-H-0009/01-Z-0007
AREA 1
SLURRY FEED SYSTEM

EMR COPROCESSING PILOT PLANT
PP3

PID No. D-3-1 -MP-1
DRAWN CAD DATE 86.07.03
CHKD
DESIGN
REV 02

Monenco Consultants Limited

WORK ORDER No. DSS 8279-3

REG. No. 204133

LOOP16

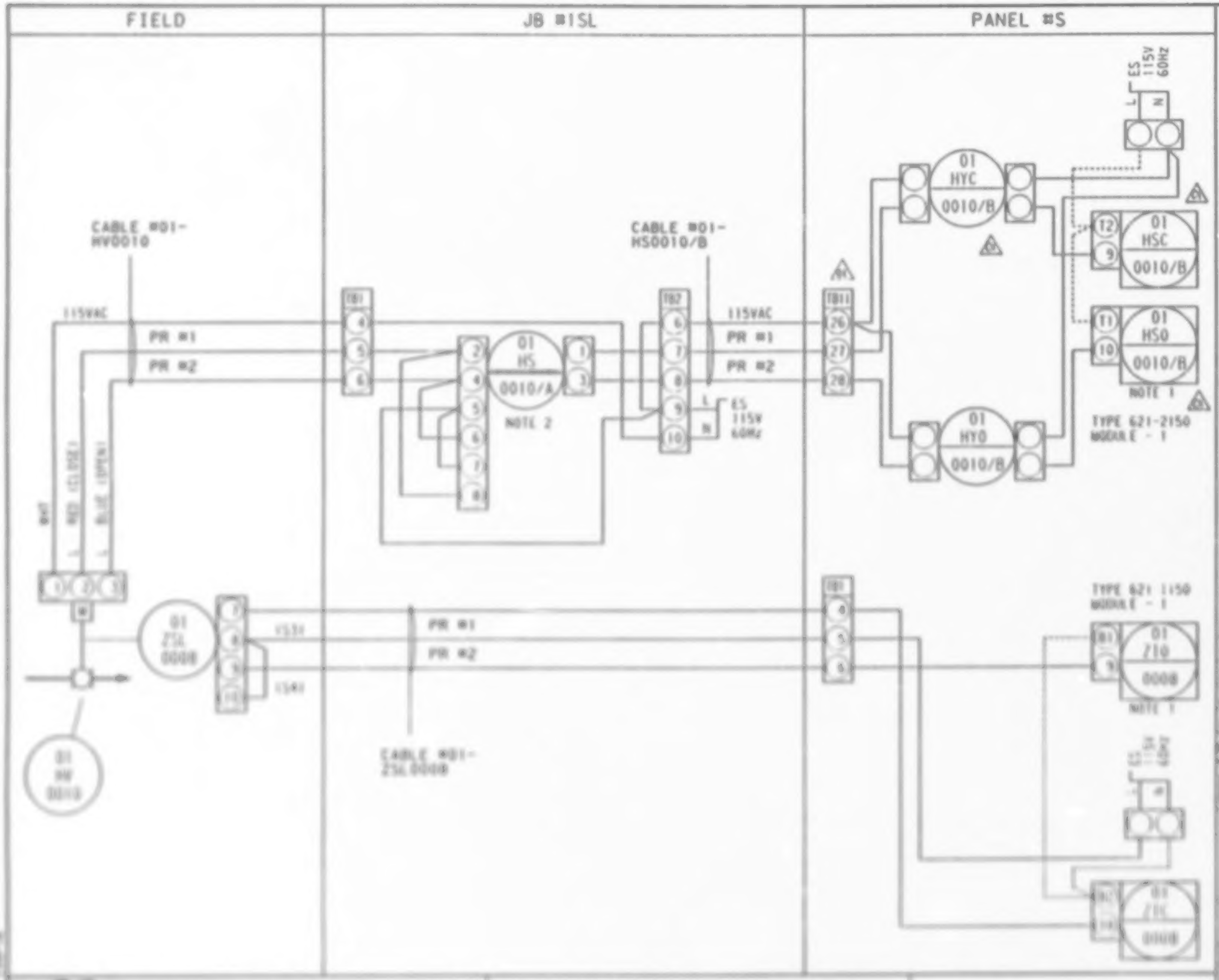

NOTES:

1. HONEYWELL PLC CONTACTS.
   ------------ INDICATES INTERNAL JUMPERS
2. CLOSE/OPEN/PLC HAND SELECTOR POSITIONS:

   OPEN / CLOSE / PLC

	CLOSE	OPEN	PLC
1–2			X
3–4			X
5–6		X	
7–8	X		

GENERAL NOTES:

A. 24 VAC Power Supply from GFC, Hammond Series Power Supply in panel.

B. 4-20mA signals to computer are shunted by EMR with a resistor to provide voltage signal to computer card.

C. Compatibility of voltage signals to computer programmed by EMR.

REV	DATE	DESCRIPTION	CHK	MEC APP	EMR APP

Energy, Mines and Resources Canada — Énergie, Mines et Ressources Canada

LOOP DIAGRAM
01-H-0010/01-Z-0008

AREA 1

SLURRY FEED SYSTEM

EMR COPROCESSING PILOT PLANT PP3

WORK ORDER No. DSS 8279-3

REG. No. 204134

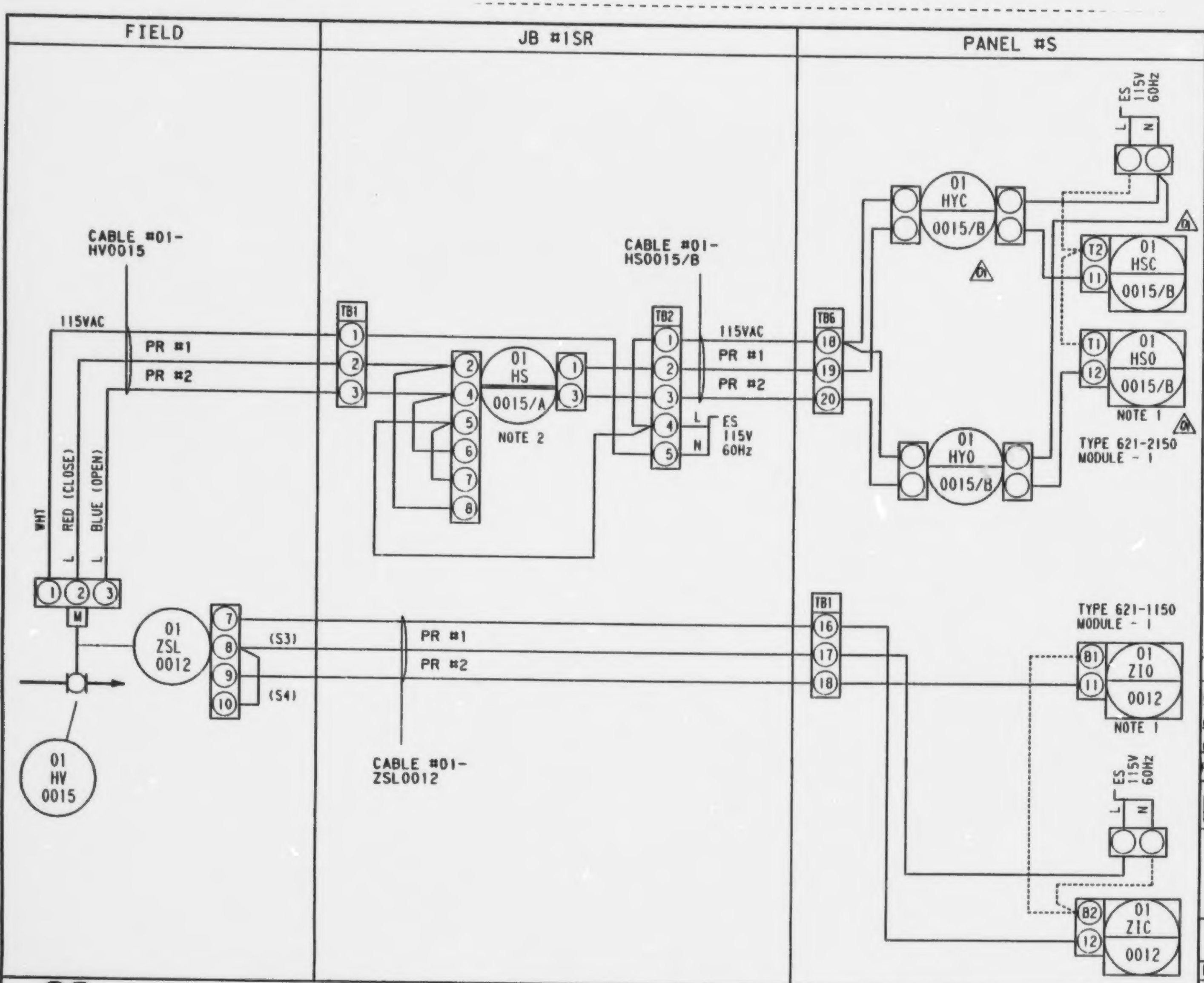

NOTES:
1. HONEYWELL PLC CONTACTS.
------------ INDICATES INTERNAL JUMPERS
2. CLOSE/OPEN/PLC HAND SELECTOR POSITIONS:

CLOSE / OPEN / PLC

	CLOSE	OPEN	PLC
1–2			X
3–4			X
5–6		X	
7–8	X		

GENERAL NOTES:

A. 24 VAC Power Supply from GFC, Hammond Series Power Supply in panel.

B. 4-20mA signals to computer are shunted by EMR with a resistor to provide voltage signal to computer card.

C. Compatibility of voltage signals to computer programmed by EMR.

REV	DATE	DESCRIPTION	CHK	MEC APP	EMR APP
02	86.09	PH.1 FINAL	CP	RAW	
01	86.07.21	INSTRUMENT SYMBOL CHANGED	RAW		
00	86.07.25	FOR EMR APPROVAL	RAW		✓

Energy, Mines and Resources Canada / Énergie, Mines et Ressources Canada

LOOP DIAGRAM
01-H-0015/01-Z-0012
AREA 1
SLURRY FEED SYSTEM

EMR COPROCESSING PILOT PLANT
PP3

PID No.	D-3-1 -MP-1		
DRAWN	CAD	DATE	86.07.03
CHKD			REV
DESIGN			02

Monenco Consultants Limited

WORK ORDER No. DSS 8279-3

REG. No. 204135

LOOP16

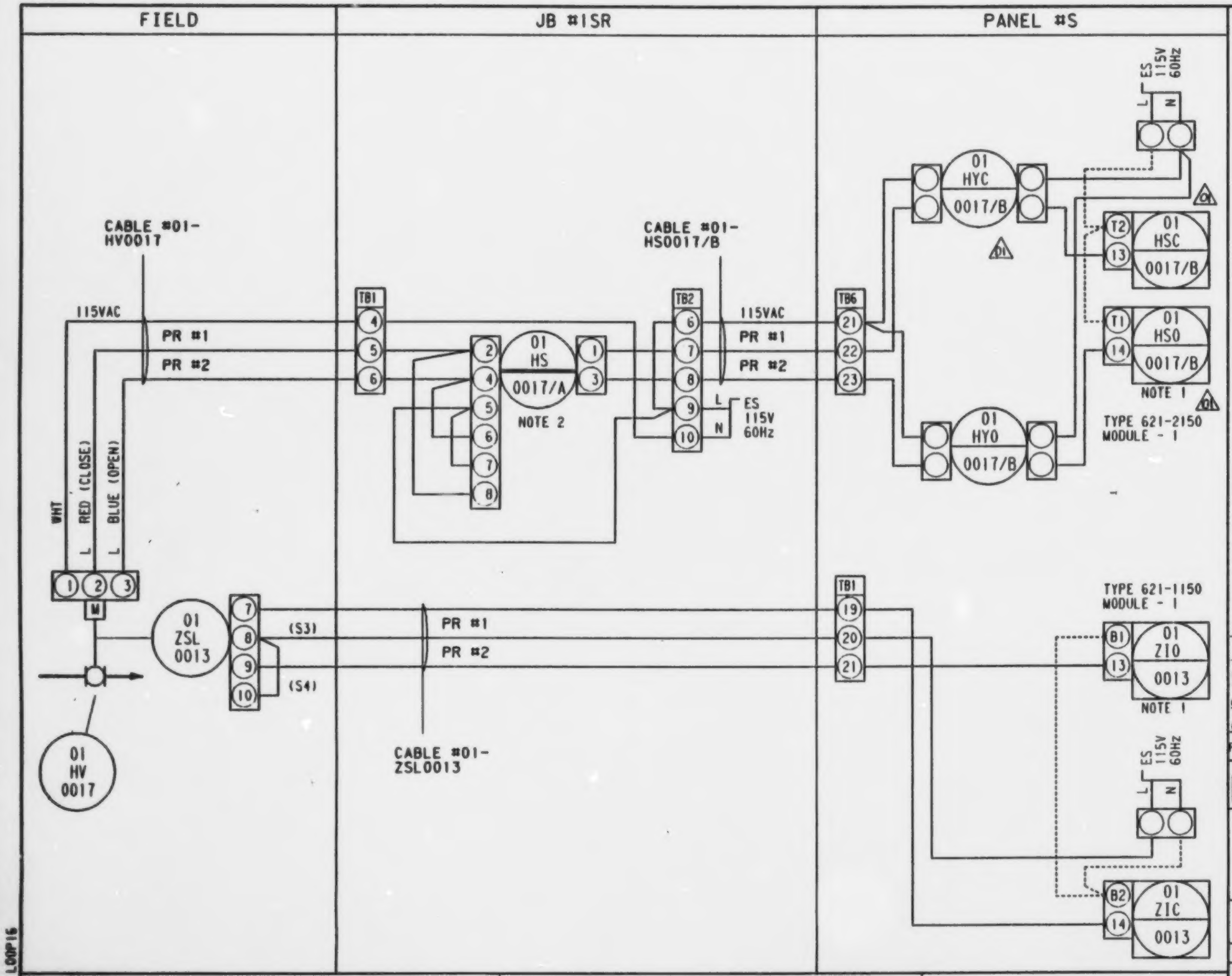

NOTES:
1. HONEYWELL PLC CONTACTS.
------------ INDICATES INTERNAL JUMPERS
2. CLOSE/OPEN/PLC HAND SELECTOR POSITIONS:

OPEN
CLOSE PLC

	CLOSE	OPEN	PLC
1–2			X
3–4			X
5–6		X	
7–8	X		

GENERAL NOTES:

A. 24 VAC Power Supply from GFC, Hammond Series Power Supply in panel.

B. 4-20mA signals to computer are shunted by EMR with a resistor to provide voltage signal to computer card.

C. Compatibility of voltage signals to computer programmed by EMR.

REV	DATE	DESCRIPTION	CHK	MEC APP	EMR APP
02	86.09	PH.4 FINAL	CP	RPW	
01	86.01.28	INSTRUMENT SYMBOL UPDATED	RPW		
00	86.01.15	FOR EMR APPROVAL	RPW		✓

Energy, Mines and Resources Canada / Énergie, Mines et Ressources Canada

LOOP DIAGRAM
01-H-0017/01-Z-0013
AREA 1
SLURRY FEED SYSTEM

EMR COPROCESSING PILOT PLANT
PP3

PID No.	D-3-1 -MP-1		
DRAWN	CAD	DATE	86.07.03
CHKD		REV	02
DESIGN			

Monenco Consultants Limited

WORK ORDER No. DSS 8279-3

REG. No. 204136

LOOP16

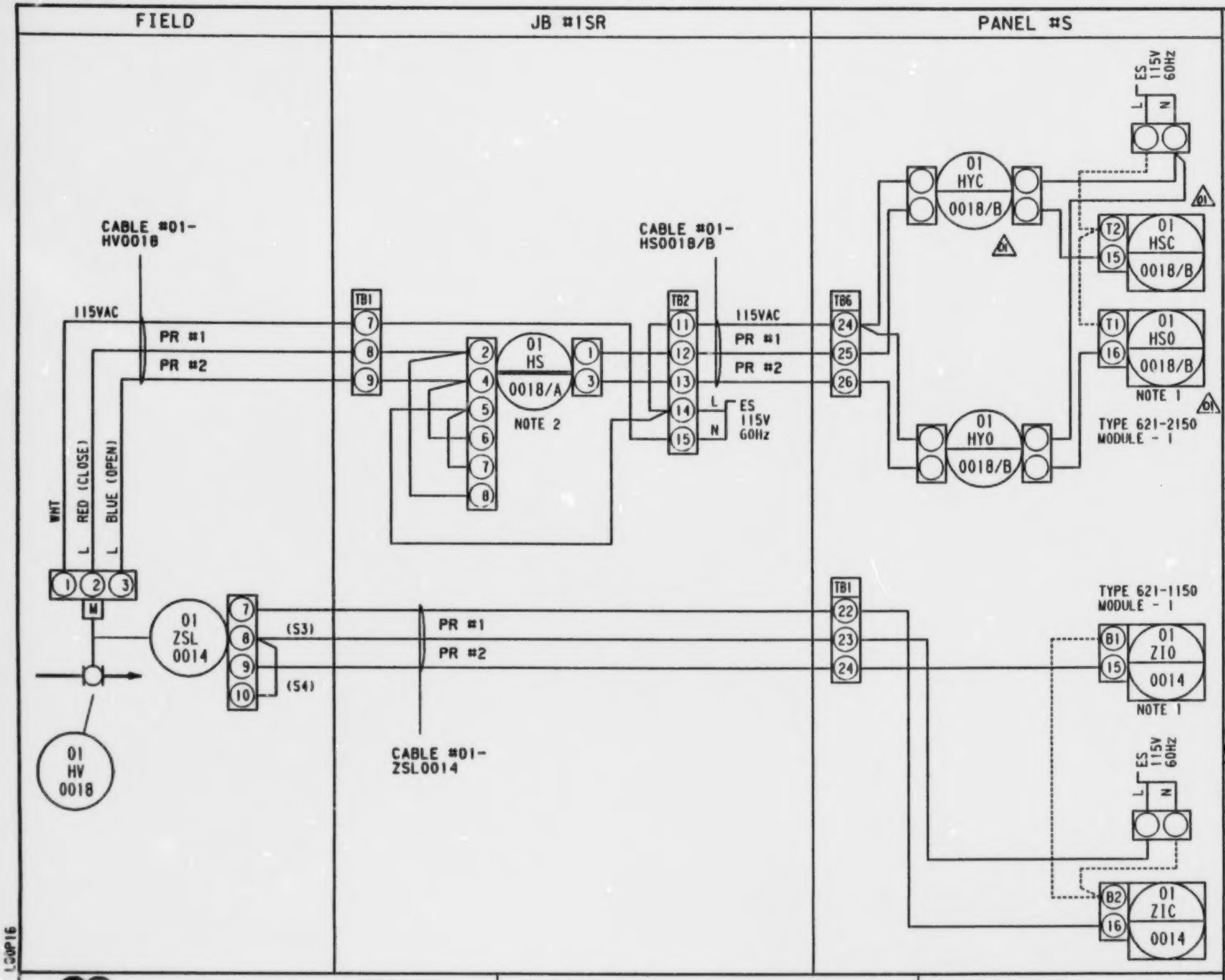

NOTES:
1. HONEYWELL PLC CONTACTS.
------------ INDICATES INTERNAL JUMPERS

2. CLOSE/OPEN/PLC HAND SELECTOR POSITIONS:

CLOSE OPEN PLC

	CLOSE	OPEN	PLC
1–2			X
3–4			X
5–6		X	
7–8	X		

GENERAL NOTES:

A. 24 VAC Power Supply from GFC, Hammond Series Power Supply in panel.

B. 4-20mA signals to computer are shunted by EMR with a resistor to provide voltage signal to computer card.

C. Compatibility of voltage signals to computer programmed by EMR.

REV	DATE	DESCRIPTION	CHK	MEC APP	EMR APP
02	86.09	PH.4 FINAL	CP	RPW	
01	86.07.29	INSTRUMENT SYMBOL CHANGED	RPW		
00	86.07.25	FOR EMR APPROVAL	RPW		✓

Energy, Mines and Resources Canada — Énergie, Mines et Ressources Canada

LOOP DIAGRAM
01-H-0018/01-Z-0014
AREA 1
SLURRY FEED SYSTEM

EMR COPROCESSING PILOT PLANT
PP3

PID No. D-3-1 -MP-1
DRAWN CAD | DATE 86.07.03
CHKD
DESIGN | REV 02

Monenco Consultants Limited | WORK ORDER No. DSS 8279-3 | REG. No. 204137

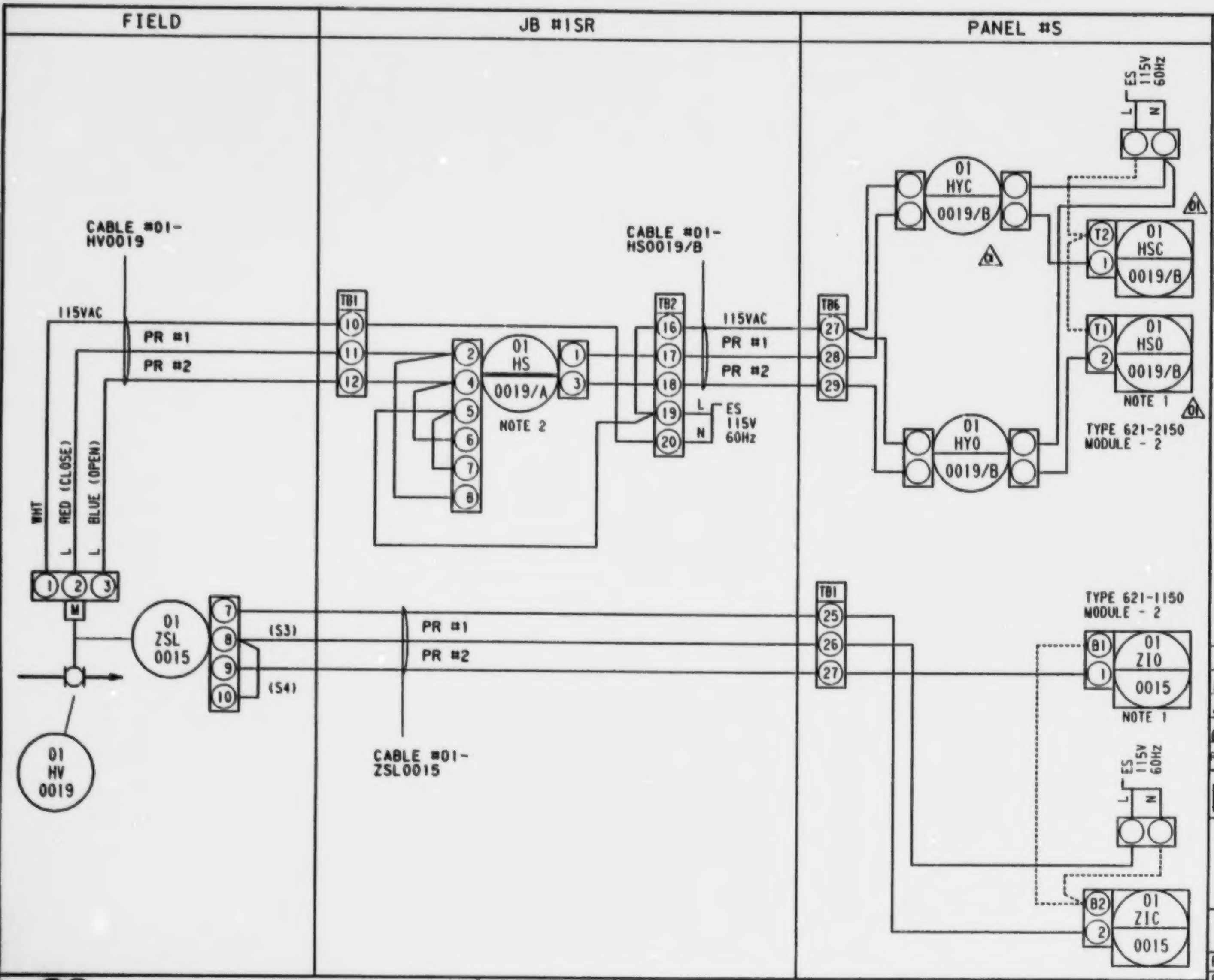

NOTES:

1. HONEYWELL PLC CONTACTS.
------------ INDICATES INTERNAL JUMPERS

2. CLOSE/OPEN/PLC HAND SELECTOR POSITIONS:

CLOSE OPEN PLC

	CLOSE	OPEN	PLC
1–2 (N.O.)			X
3–4 (N.O.)			X
5–6 (N.C.)		X	
7–8 (N.O.)	X		

GENERAL NOTES:

A. 24 VAC Power Supply from GFC, Hammond Series Power Supply in panel.

B. 4-20mA signals to computer are shunted by EMR with a resistor to provide voltage signal to computer card.

C. Compatibility of voltage signals to computer programmed by EMR.

REV	DATE	DESCRIPTION	CHK	MEC APP	EMR APP
02	86.09	PH.1 FINAL	CP	RPW	
01	86.01.14	INSTRUMENT SYMBOL CHANGED	RPW		
00	86.01.25	FOR EMR APPROVAL	RPW		✓

Energy, Mines and Resources Canada / Énergie, Mines et Ressources Canada

LOOP DIAGRAM
01-H-0019/01-Z-0015
AREA 1
SLURRY FEED SYSTEM

EMR COPROCESSING PILOT PLANT
PP3

PID No.	D-3-1 -MP-1		
DRAWN	CAD	DATE	86.07.03
CHKD			REV
DESIGN			02

Monenco Consultants Limited | WORK ORDER No. DSS 8279-3 | REG. No. 204138

LOOP16

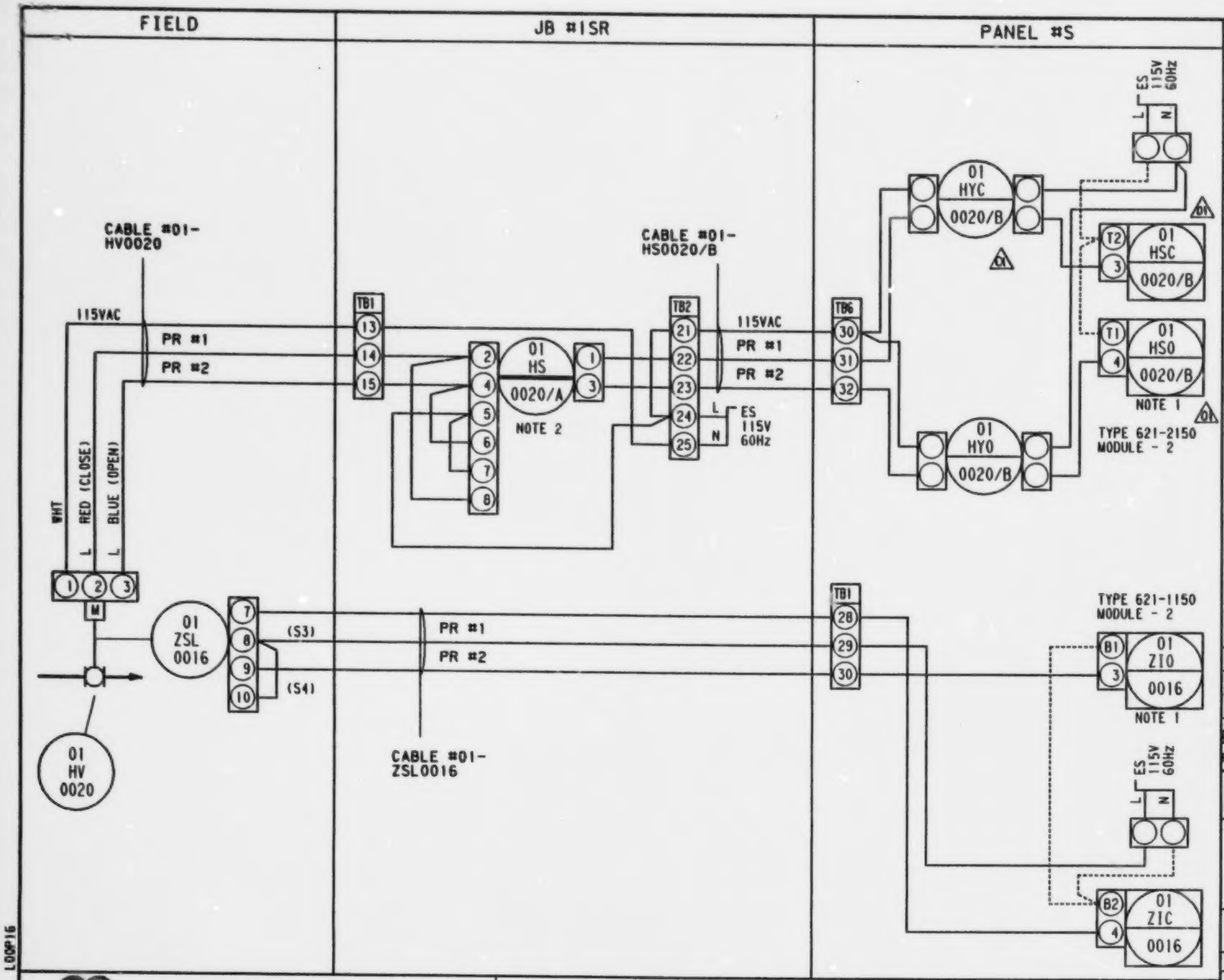

NOTES:
1. HONEYWELL PLC CONTACTS.
------------ INDICATES INTERNAL JUMPERS
2. CLOSE/OPEN/PLC HAND SELECTOR POSITIONS:

CLOSE OPEN PLC

	CLOSE	OPEN	PLC
1–2			X
3–4			X
5–6		X	
7–8	X		

GENERAL NOTES:

A. 24 VAC Power Supply from GFC, Hammond Series Power Supply in panel.

B. 4-20mA signals to computer are shunted by EMR with a resistor to provide voltage signal to computer card.

C. Compatibility of voltage signals to computer programmed by EMR.

REV	DATE	DESCRIPTION	CHK	MEC APP	EMR APP
02	86.09	PH.1 FINAL	CP	RAW	
01	86.07.29	INSTRUMENT SYMBOL CHANGED	RAW		
00	86.07.15	FOR EMR APPROVAL	RPW		✓

Energy, Mines and Resources Canada / Énergie, Mines et Ressources Canada

LOOP DIAGRAM
01-H-0020/01-Z-0016
AREA 1
SLURRY FEED SYSTEM

EMR COPROCESSING PILOT PLANT
PP3

PID No. D-3-1 -MP-1
DRAWN CAD DATE 86.07.03
CHKD
DESIGN
REV 02

LOOP16

Monenco Consultants Limited

WORK ORDER No. DSS 8279-3

REG. No. 204139

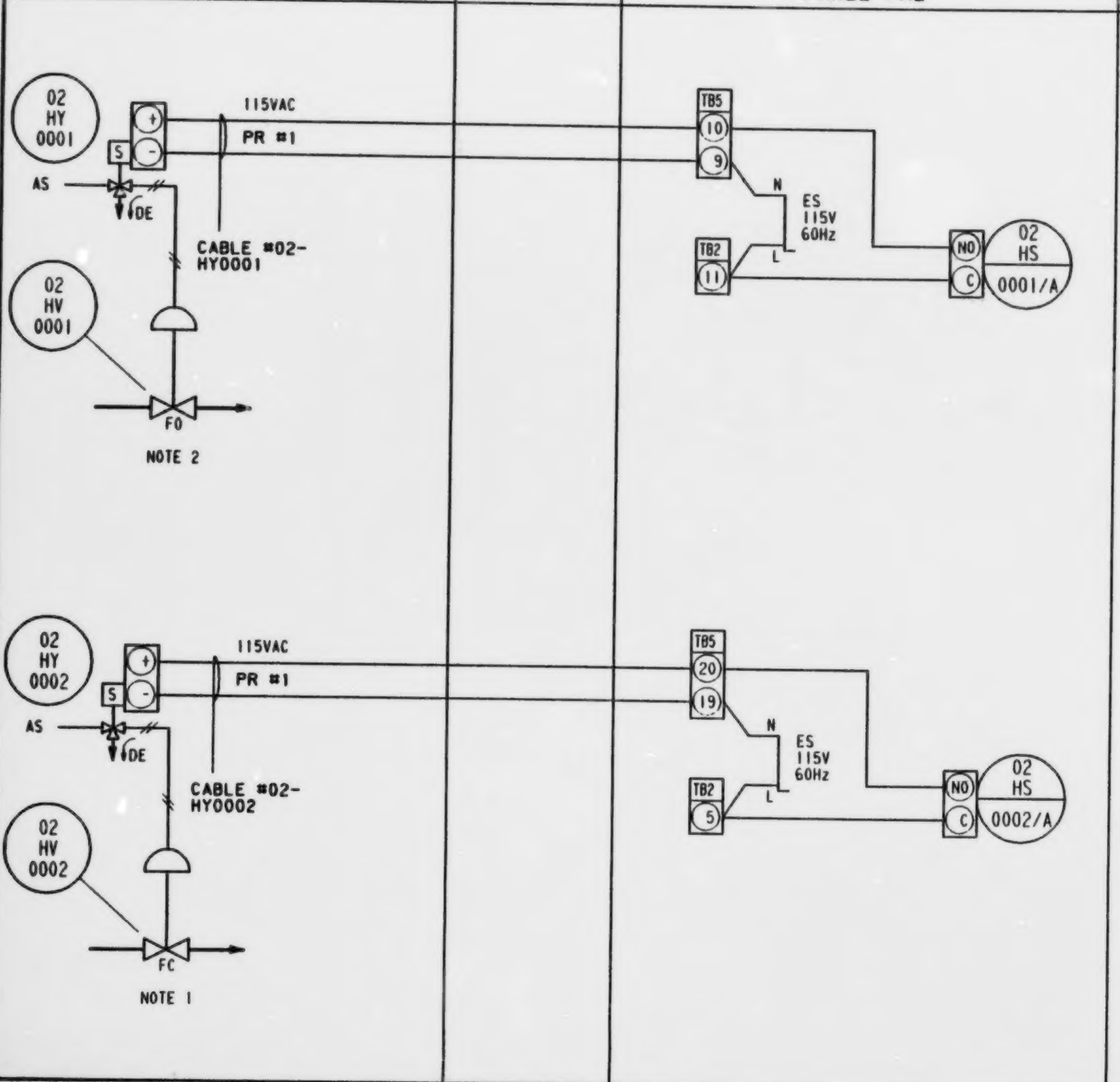

NOTES:

1. HAND STATION OPENS OR CLOSES VALVE. SWITCH POSITION VIEWED FROM PANEL FRONT:

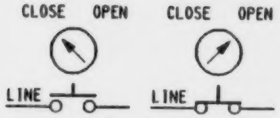

2. HAND STATION OPENS OR CLOSES VALVE. SWITCH POSITION VIEWED FROM PANEL FRONT:

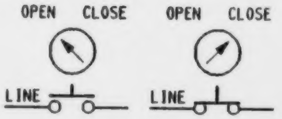

GENERAL NOTES:

A. 24 VAC Power Supply from GFC, Hammond Series Power Supply in panel.

B. 4-20mA signals to computer are shunted by EMR with a resistor to provide voltage signal to computer card.

C. Compatibility of voltage signals to computer programmed by EMR.

REV	DATE	DESCRIPTION	CHK	MEC APP	EMR APP
01	86.09	PH. 1 FINAL	CP		
00	86.07.15	FOR EMR APPROVAL	RW		✓

Energy, Mines and Resources Canada — Énergie, Mines et Ressources Canada

LOOP DIAGRAM
02-H-0001/0002
AREA 2
FEED PREHEAT AND DUMP SYSTEM

EMR COPROCESSING PILOT PLANT
PP3

PID No.	D-3-2 -MP-1		
DRAWN	CAD	DATE	86.05.15
CHKD			REV
DESIGN			01

Monenco Consultants Limited | WORK ORDER No. DSS 8279-3 | REG. No. 204042

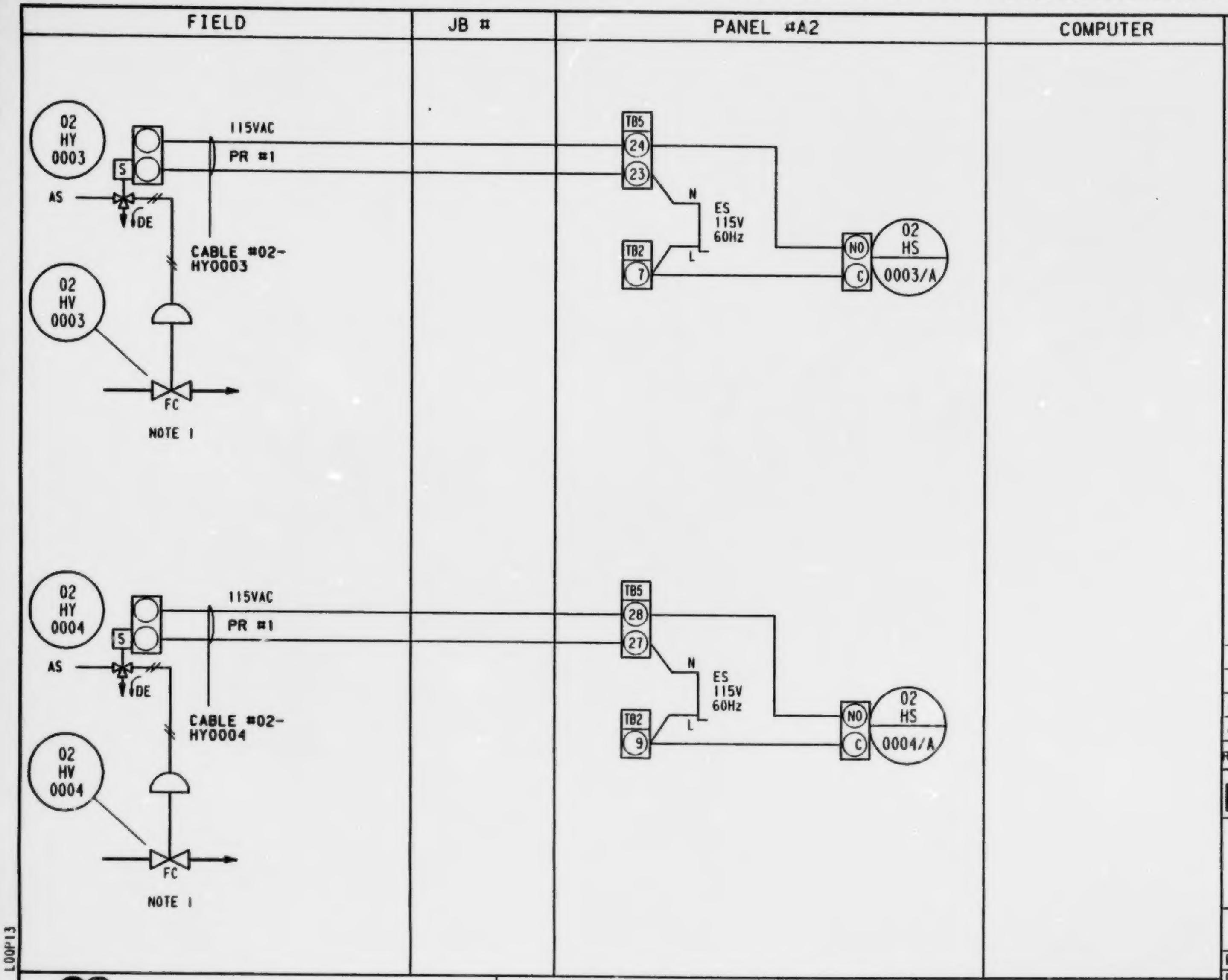

NOTES:

1. HAND STATION OPENS OR CLOSES VALVE. SWITCH POSITION VIEWED FROM PANEL FRONT:

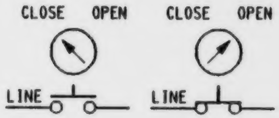

2. HAND STATION OPENS OR CLOSES VALVE. SWITCH POSITION VIEWED FROM PANEL FRONT:

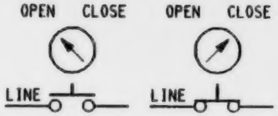

GENERAL NOTES:

A. 24 VAC Power Supply from GFC, Hammond Series Power Supply in panel.

B. 4-20mA signals to computer are shunted by EMR with a resistor to provide voltage signal to computer card.

C. Compatibility of voltage signals to computer programmed by EMR.

REV	DATE	DESCRIPTION	CHK	MEC APP	EMR APP
01	86-07	PH.1 FINAL	CP	[signature]	
00	07 86.15	FOR EMR APPROVAL	RW		✓

Energy, Mines and Resources Canada — Énergie, Mines et Ressources Canada

LOOP DIAGRAM
02-H-0003/0004
AREA 2
FEED PREHEAT AND DUMP SYSTEM

EMR COPROCESSING PILOT PLANT
PP3

PID No. D-3-2 -MP-1
DRAWN CAD DATE 86.05.15
CHKD
DESIGN
REV 01

Monenco Consultants Limited | WORK ORDER No. DSS 8279-3 | REG. No. 204043

LOOP13

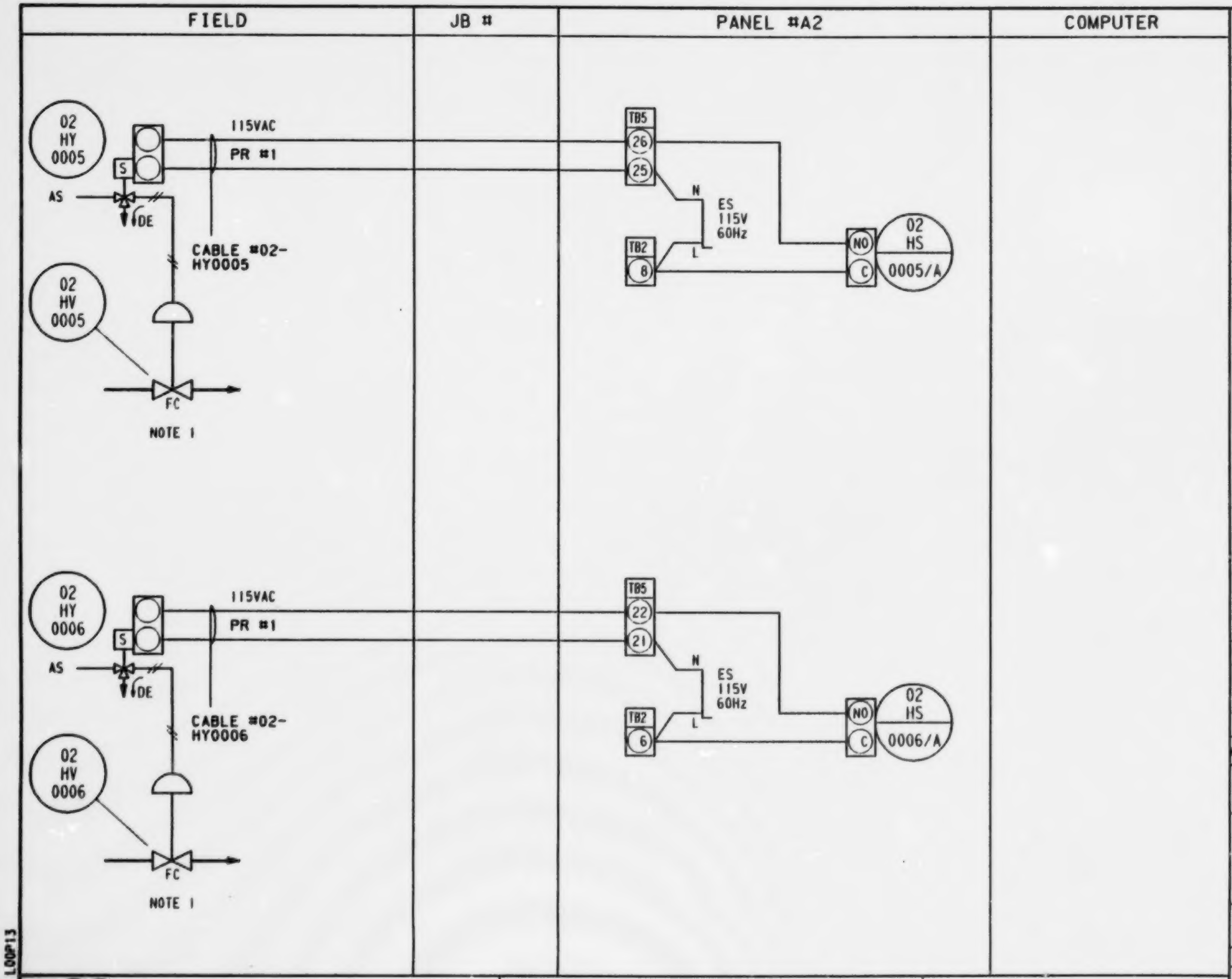

NOTES:

1. HAND STATION OPENS OR CLOSES VALVE. SWITCH POSITION VIEWED FROM PANEL FRONT:

   CLOSE OPEN — LINE   CLOSE OPEN — LINE

2. HAND STATION OPENS OR CLOSES VALVE. SWITCH POSITION VIEWED FROM PANEL FRONT:

   OPEN CLOSE — LINE   OPEN CLOSE — LINE

GENERAL NOTES:

A. 24 VAC Power Supply from GFC, Hammond Series Power Supply in panel.

B. 4-20mA signals to computer are shunted by EMR with a resistor to provide voltage signal to computer card.

C. Compatibility of voltage signals to computer programmed by EMR.

REV	DATE	DESCRIPTION	CHK	MEC APP	EMR APP
01	86-09-07	PH. 1 FINAL	CP	RDL	
00	86.15	FOR EMR APPROVAL	RW		✓

Energy, Mines and Resources Canada — Énergie, Mines et Ressources Canada

LOOP DIAGRAM
02-H-0005/0006
AREA 2
FEED PREHEAT AND DUMP SYSTEM

EMR COPROCESSING PILOT PLANT PP3

PID No.	D-3-2 -MP-1		
DRAWN	CAD	DATE	86.05.15
CHKD		REV	01
DESIGN			

Monenco Consultants Limited | WORK ORDER No. DSS 8279-3 | REG. No. 204044

LOOP13

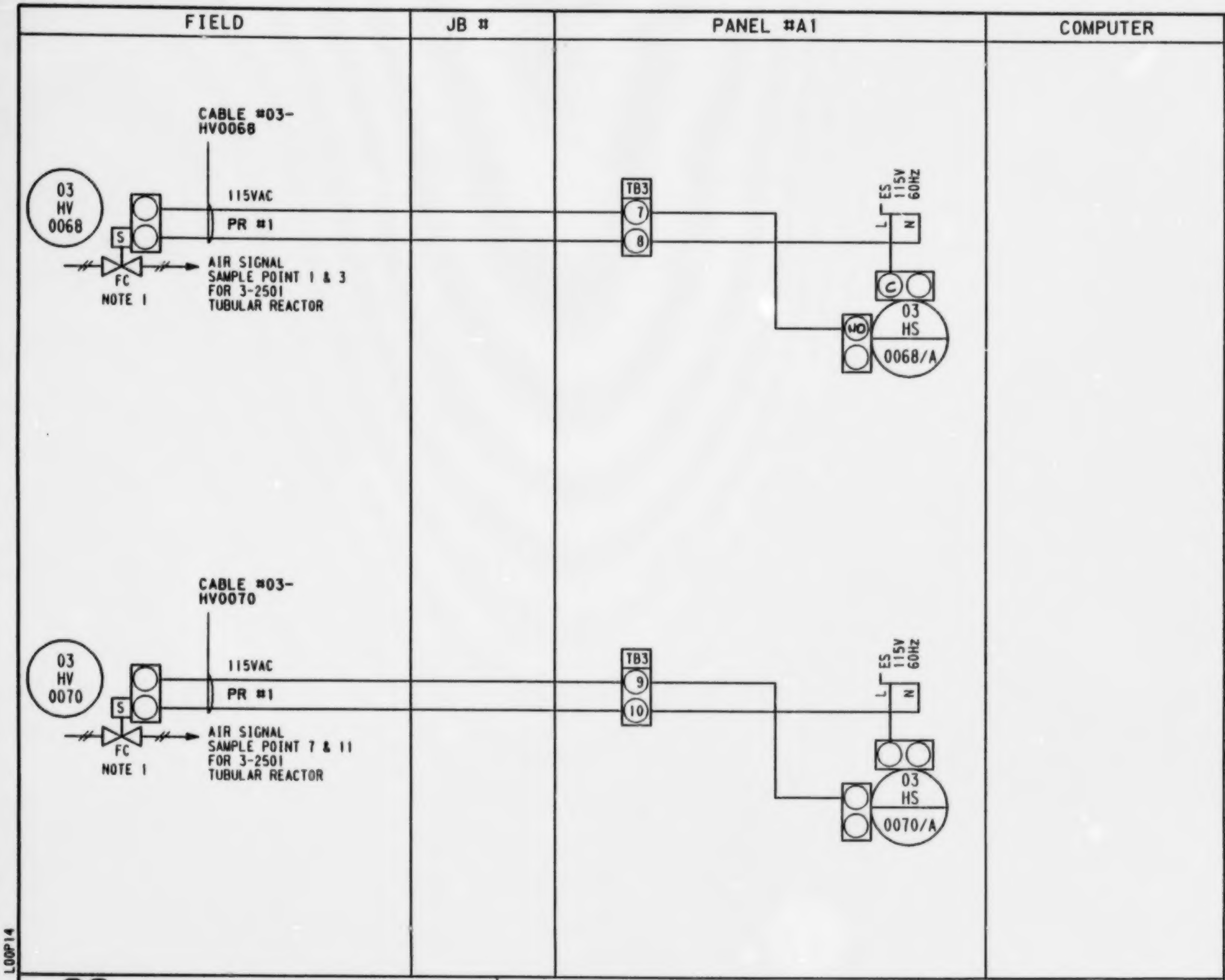

NOTES:

1. HAND STATION OPENS OR CLOSES VALVE. SWITCH POSITION VIEWED FROM PANEL FRONT:

CLOSE OPEN CLOSE OPEN

LINE LINE

GENERAL NOTES:

A. 24 VAC Power Supply from GFC, Hammond Series Power Supply in panel.

B. 4-20mA signals to computer are shunted by EMR with a resistor to provide voltage signal to computer card.

C. Compatibility of voltage signals to computer programmed by EMR.

REV	DATE	DESCRIPTION	CHK	MEC APP	EMR APP
01	86.09	PU.1 FINAL	[illegible]	[illegible]	
00	86.07.15	FOR EMR APPROVAL	[illegible]		✓

Energy, Mines and Resources Canada — Énergie, Mines et Ressources Canada

LOOP DIAGRAM
03-H-0068/0070
AREA 3
REACTOR AND SAMPLING SYSTEM

EMR COPROCESSING PILOT PLANT
PP3

PID No.	D-3-3 -MP-1		
DRAWN	CAD	DATE	86.05.15
CHKD			REV
DESIGN			01

LOOP14

Monenco Consultants Limited

WORK ORDER No. DSS 8279-3

REG. No. 204037

B

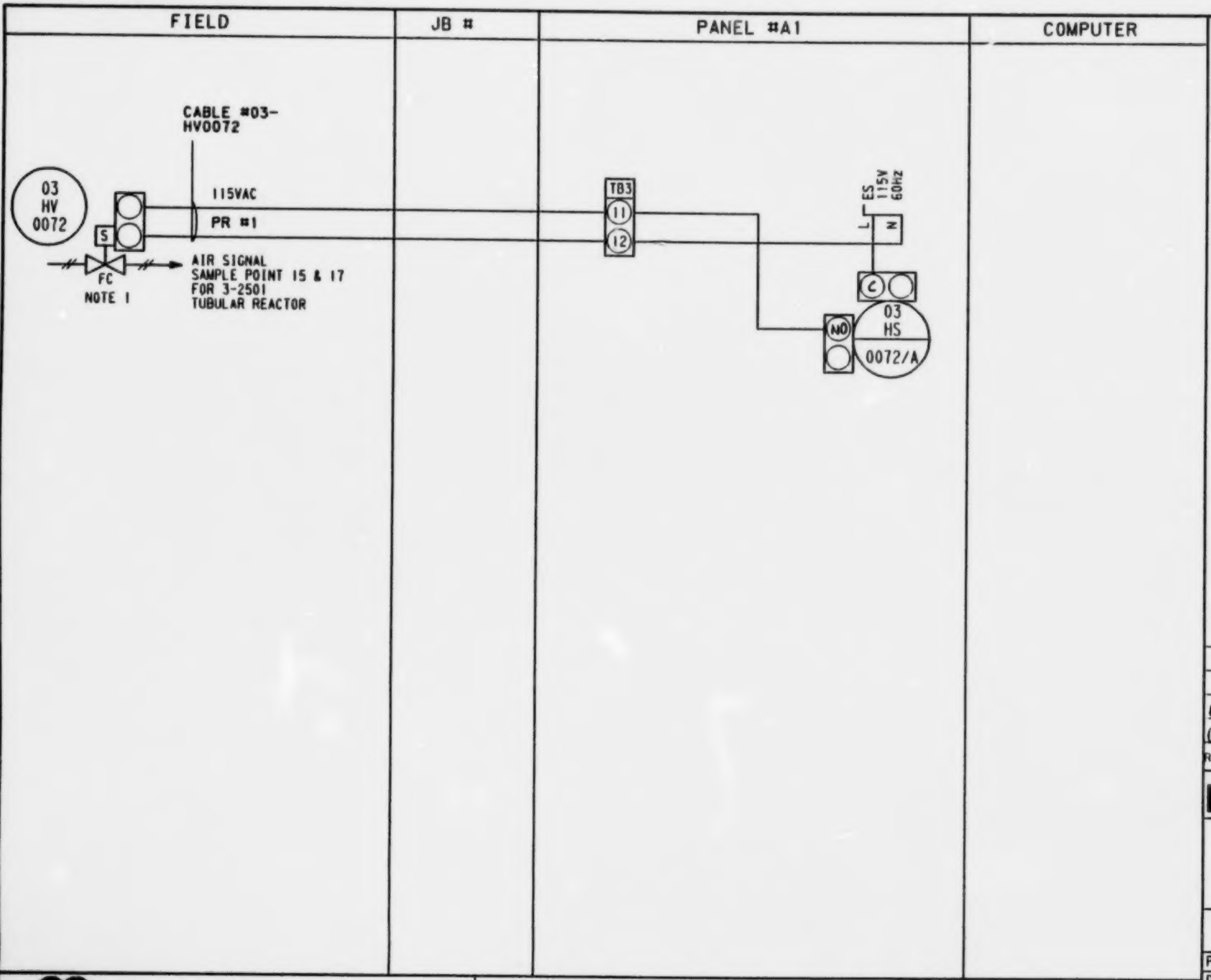

NOTES:

1. HAND STATION OPENS OR CLOSES VALVE. SWITCH POSITION VIEWED FROM PANEL FRONT:

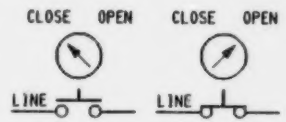

GENERAL NOTES:

A. 24 VAC Power Supply from GFC, Hammond Series Power Supply in panel.

B. 4-20mA signals to computer are shunted by EMR with a resistor to provide voltage signal to computer card.

C. Compatibility of voltage signals to computer programmed by EMR.

REV	DATE	DESCRIPTION	CHK	MEC APP	EMR APP
01	86.09	PH.1 FINAL	cP	[illegible]	
00	86.07.15	FOR EMR. APPROVAL	[illegible]		✓

Energy, Mines and Resources Canada — Énergie, Mines et Ressources Canada

LOOP DIAGRAM
03-H-0072
AREA 3
REACTOR AND SAMPLING SYSTEM

EMR COPROCESSING PILOT PLANT
PP3

PID No. D-3-3 -MP-1
DRAWN | CAD | DATE
CHKD
DESIGN
REV 01

LOOP14

Monenco Consultants Limited | WORK ORDER No. DSS 8279-3 | REG. No. 204038

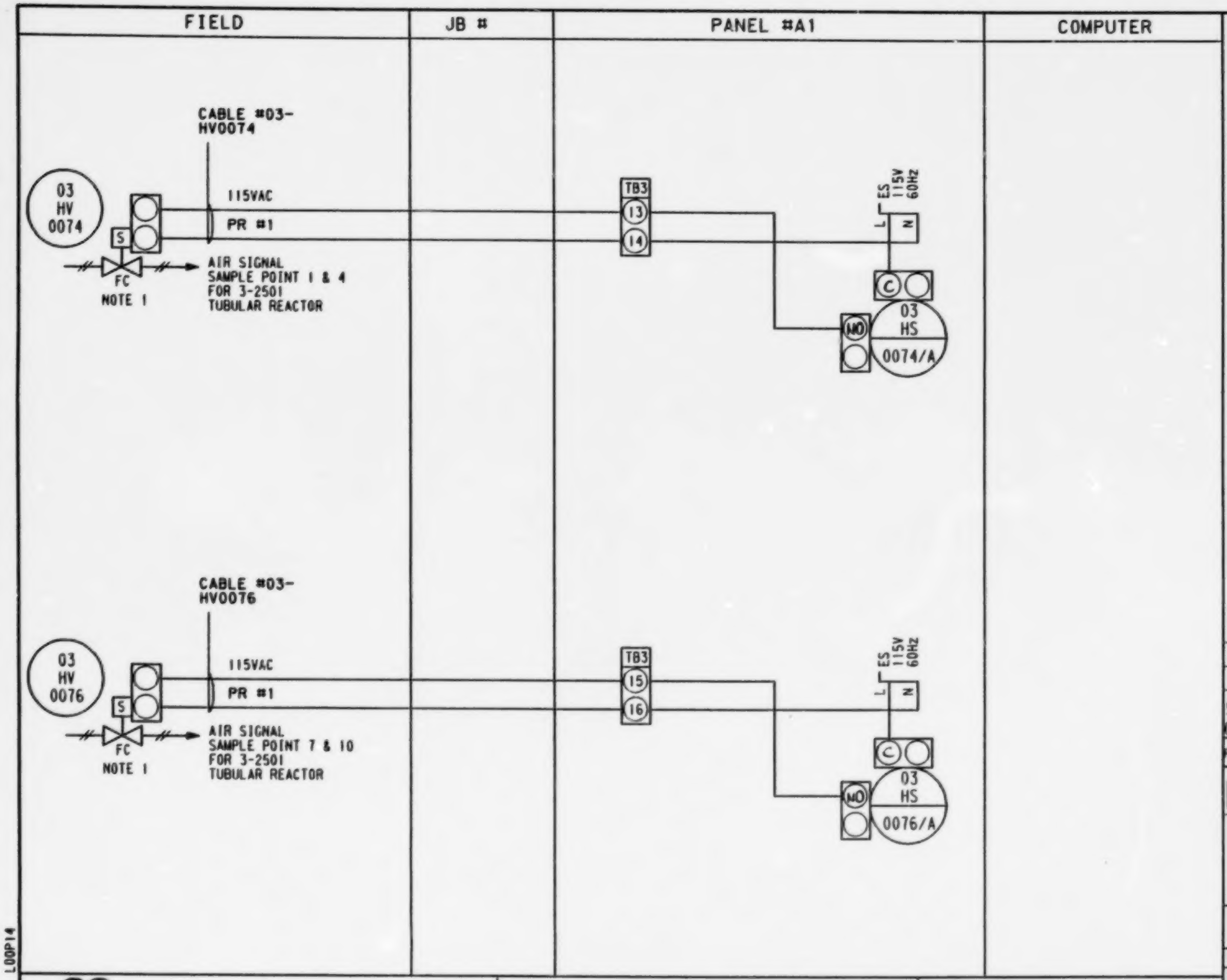

NOTES:

1. HAND STATION OPENS OR CLOSES VALVE. SWITCH POSITION VIEWED FROM PANEL FRONT:

CLOSE OPEN — LINE   CLOSE OPEN — LINE

GENERAL NOTES:

A. 24 VAC Power Supply from GFC, Hammond Series Power Supply in panel.

B. 4-20mA signals to computer are shunted by EMR with a resistor to provide voltage signal to computer card.

C. Compatibility of voltage signals to computer programmed by EMR.

REV	DATE	DESCRIPTION	CHK	MEC APP	EMR APP
01	86.09	PH.1 FINAL			
00	86.01.16	FOR EMR APPROVAL			✓

Energy, Mines and Resources Canada — Énergie, Mines et Ressources Canada

LOOP DIAGRAM
03-H-0074/0076

AREA 3
REACTOR AND SAMPLING SYSTEM

EMR COPROCESSING PILOT PLANT
PP3

PID No. D-3-3 -MP-2
DRAWN — CAD — DATE
CHKD
DESIGN
REV 01

Monenco Consultants Limited — WORK ORDER No. DSS 8279-3 — REG. No. 204039

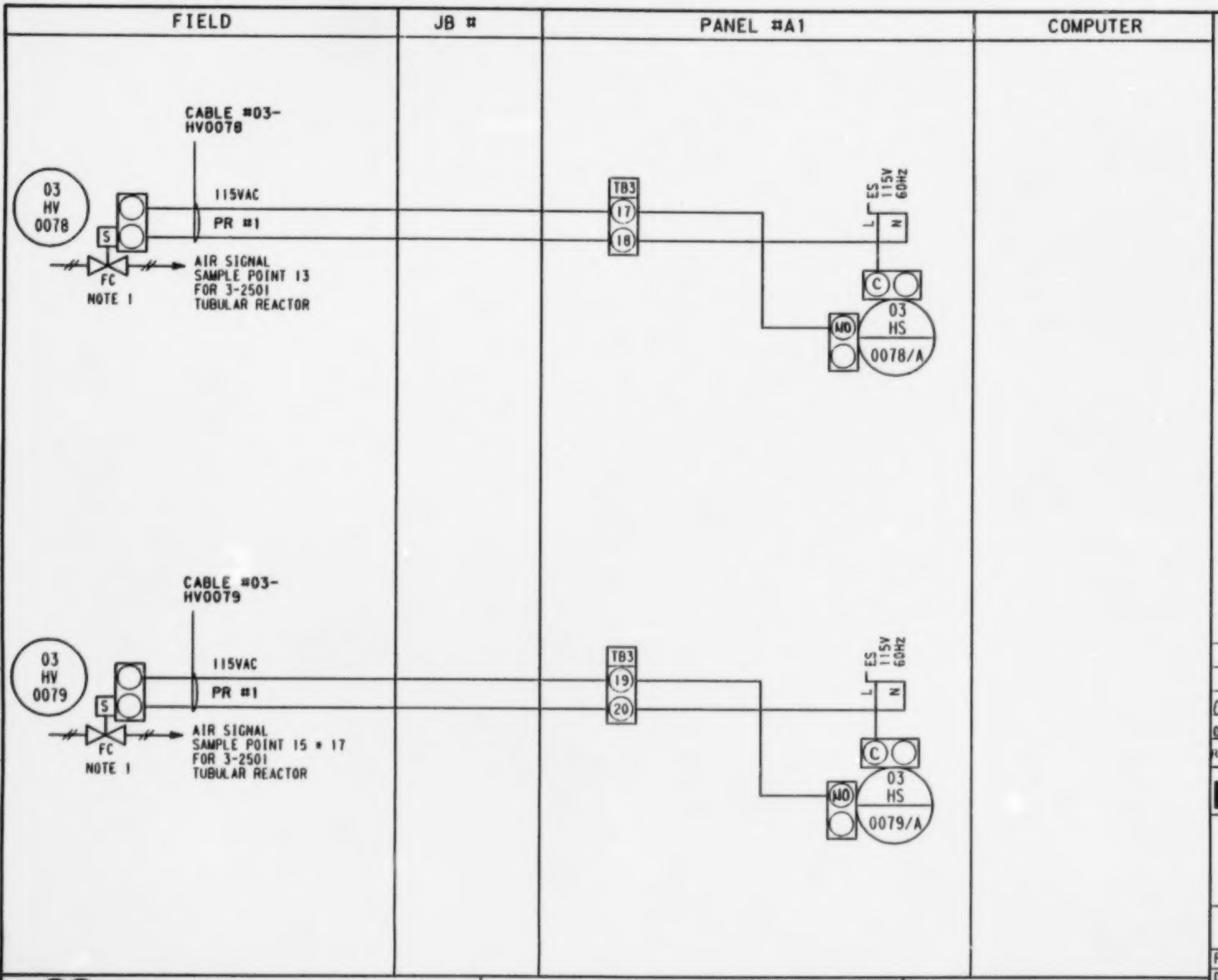

NOTES:

1. HAND STATION OPENS OR CLOSES VALVE. SWITCH POSITION VIEWED FROM PANEL FRONT:

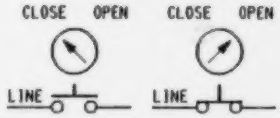

GENERAL NOTES:

A. 24 VAC Power Supply from GFC, Hammond Series Power Supply in panel.

B. 4-20mA signals to computer are shunted by EMR with a resistor to provide voltage signal to computer card.

C. Compatibility of voltage signals to computer programmed by EMR.

REV	DATE	DESCRIPTION	CHK	MEC APP	EMR APP
01	86.09	PH.1 FINAL	CP	RAW	
00	85.07.16	FOR EMR APPROVAL	RAW		✓

Energy, Mines and Resources Canada — Énergie, Mines et Ressources Canada

LOOP DIAGRAM
03-H-0078/0079

AREA 3

REACTOR AND SAMPLING SYSTEM

EMR COPROCESSING PILOT PLANT
PP3

PID No. D-3-3 -MP-2

DRAWN — CAD — DATE

CHKD

DESIGN

REV 01

LOOP14

Monenco Consultants Limited

WORK ORDER No. DSS 8279-3

REG. No. 204040

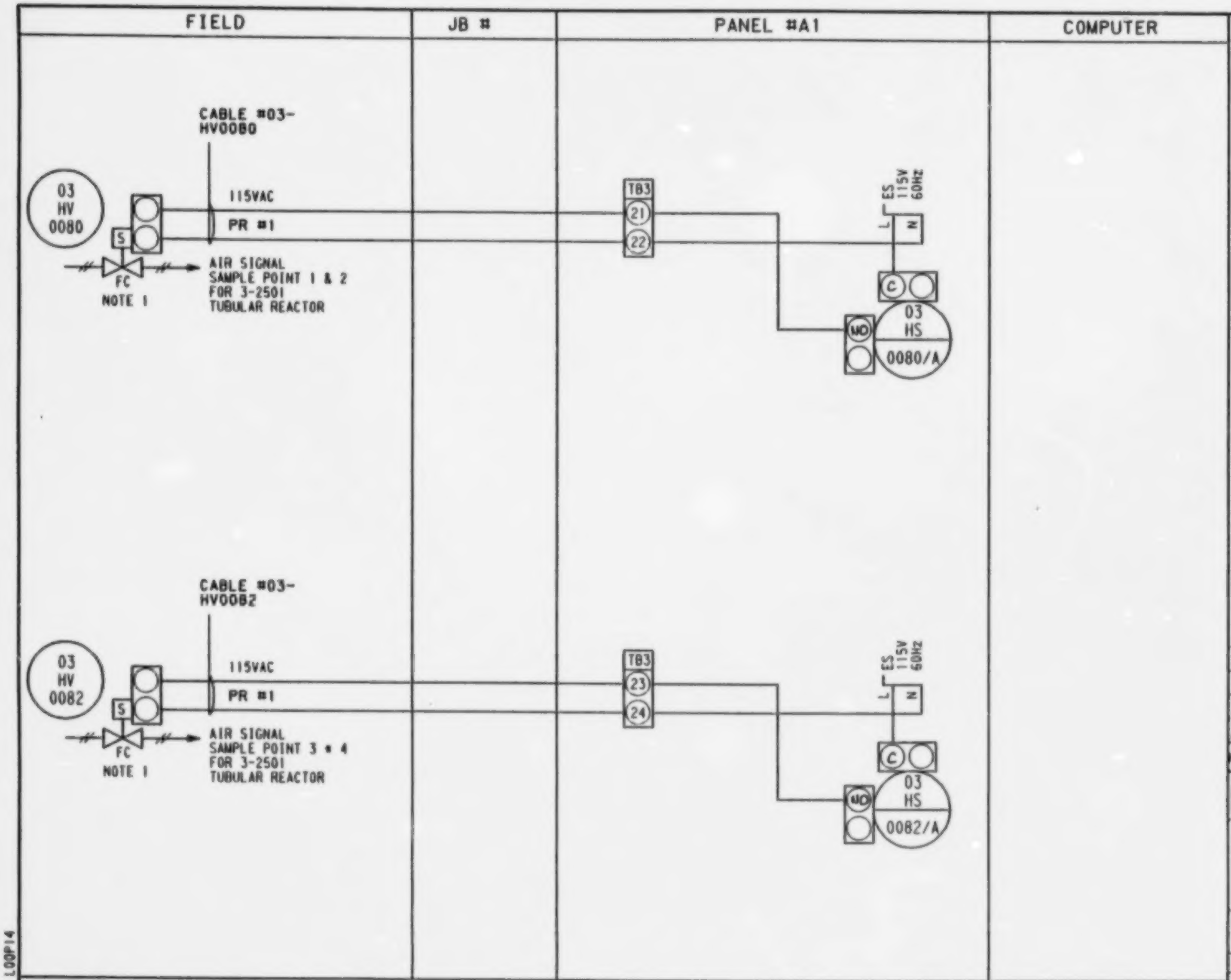

NOTES:

1. HAND STATION OPENS OR CLOSES VALVE. SWITCH POSITION VIEWED FROM PANEL FRONT:

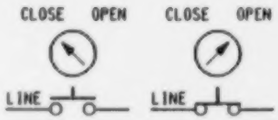

GENERAL NOTES:

A. 24 VAC Power Supply from GFC, Hammond Series Power Supply in panel.

B. 4-20mA signals to computer are shunted by EMR with a resistor to provide voltage signal to computer card.

C. Compatibility of voltage signals to computer programmed by EMR.

REV	DATE	DESCRIPTION	CHK	MEC APP	EMR APP
01	86.09	PH.1 FINAL	CP	RAW	
00	86.07.16	FOR EMR APPROVAL	RAW		✓

Energy, Mines and Resources Canada — Énergie, Mines et Ressources Canada

LOOP DIAGRAM
03-H-0080/0082
AREA 3
REACTOR AND SAMPLING SYSTEM

EMR COPROCESSING PILOT PLANT
PP3

PID No.	D-3-3 -MP-2		
DRAWN	CAD	DATE	
CHKD			REV
DESIGN			01

Monenco Consultants Limited

WORK ORDER No. DSS 8279-3

REG. No. 204041

LOOP14

B

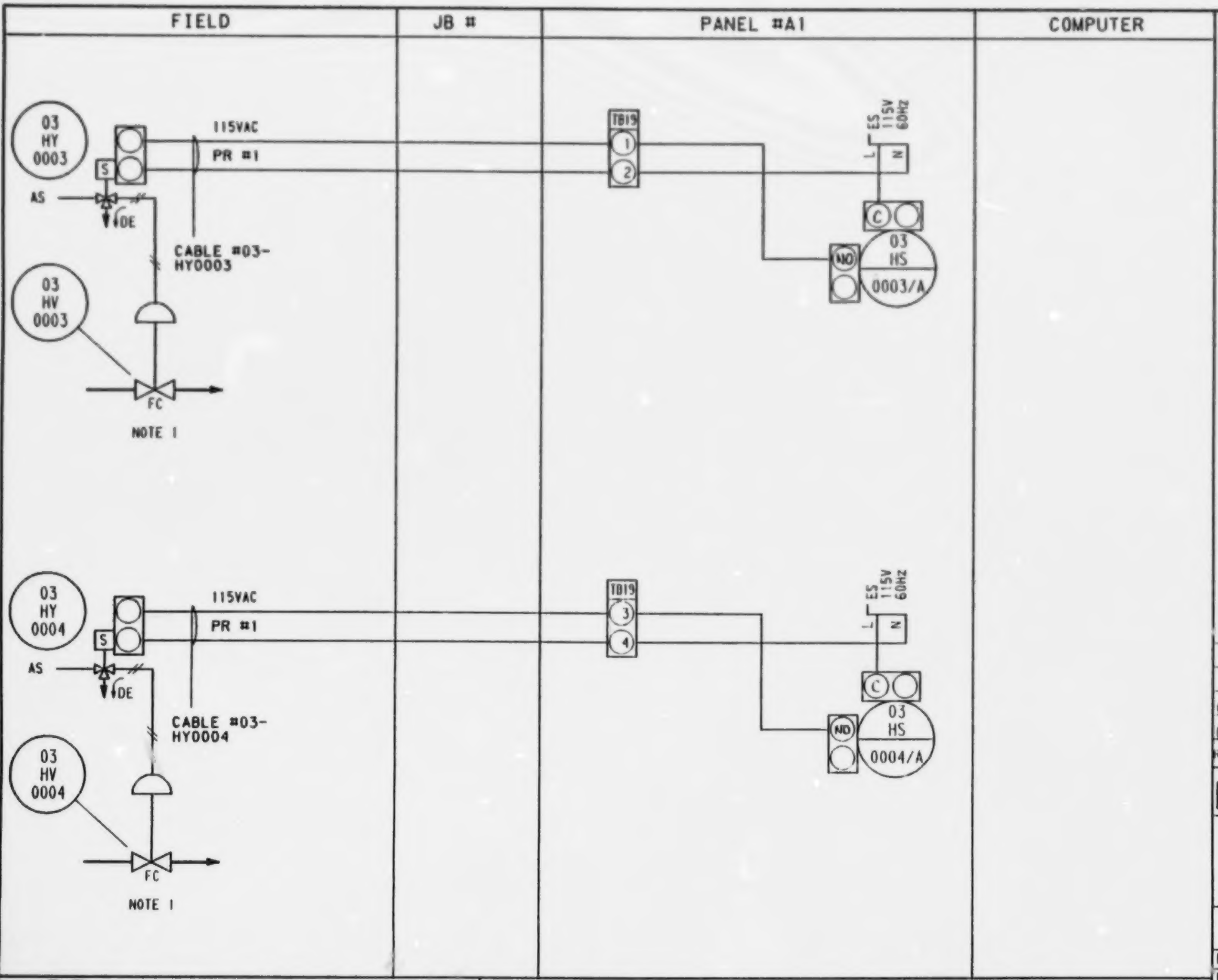

NOTES:

1. HAND STATION OPENS OR CLOSES VALVE. SWITCH POSITION VIEWED FROM PANEL FRONT:

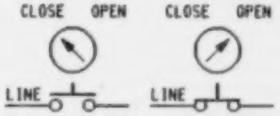

2. HAND STATION OPE[illegible] OR CLOSES VALVE. SWITCH POSITION [illegible]ED FROM PANEL FRONT:

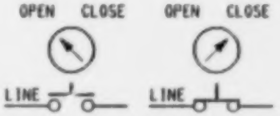

GENERAL NOTES:

A. 24 VAC Power Supply from GFC, Hammond Series Power Supply in panel.

B. 4-20mA signals to computer are shunted by EMR with a resistor to provide voltage signal to computer card.

C. Compatibility of voltage signals to computer programmed by EMR.

REV	DATE	DESCRIPTION	CHK	MEC APP	EMR APP
01	86.09	PH.4 FINAL	cf	RPW	
00	86.07.15	FOR EMR APPROVAL	RPW		✓

Energy, Mines and Resources Canada — Énergie, Mines et Ressources Canada

LOOP DIAGRAM
03-H-0003/0004
AREA 3
REACTOR AND SAMPLING SYSTEM

EMR COPROCESSING PILOT PLANT PP3

PID No. D-3-3 -MP-1
DRAWN CAD DATE
CHKD
DESIGN
REV 01

Monenco Consultants Limited

WORK ORDER No. DSS 8279-3

REG. No. 204057

LOOP13

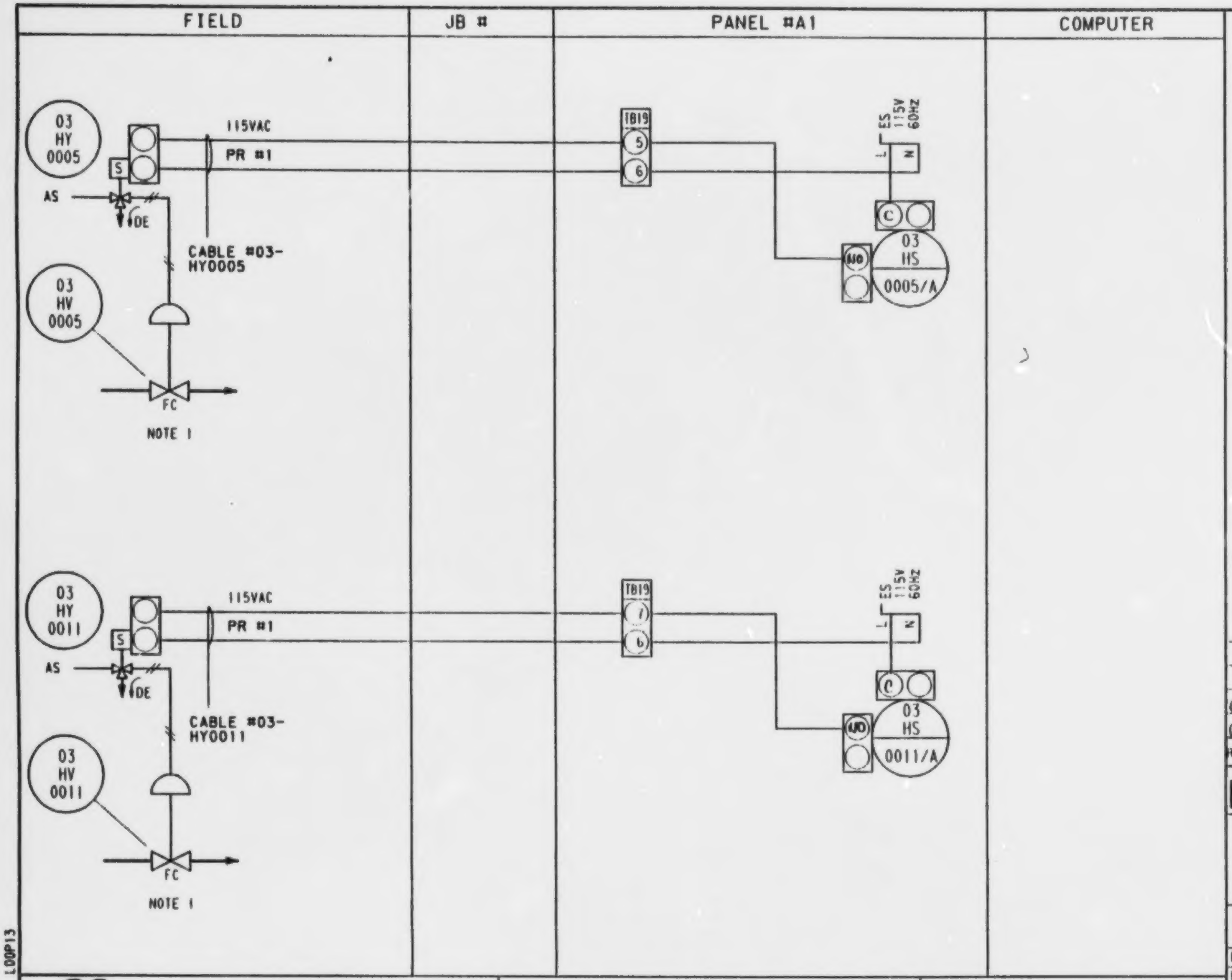

NOTES:

1. HAND STATION OPENS OR CLOSES VALVE. SWITCH POSITION VIEWED FROM PANEL FRONT:

   CLOSE OPEN — CLOSE OPEN
   LINE — LINE

2. HAND STATION OPENS OR CLOSES VALVE. SWITCH POSITION VIEWED FROM PANEL FRONT:

   OPEN CLOSE — OPEN CLOSE
   LINE — LINE

GENERAL NOTES:

A. 24 VAC Power Supply from GFC, Hammond Series Power Supply in panel.

B. 4-20mA signals to computer are shunted by EMR with a resistor to provide voltage signal to computer card.

C. Compatibility of voltage signals to computer programmed by EMR.

REV	DATE	DESCRIPTION	CHK	MEC APP	EMR APP
01	86.09	PH.1 FINAL	aP	RAW	
00	86.07.16	FOR EMR APPROVAL	RAW		✓

Energy, Mines and Resources Canada — Énergie, Mines et Ressources Canada

LOOP DIAGRAM
03-H-0005/0011
AREA 3
REACTOR AND SAMPLING SYSTEM

EMR COPROCESSING PILOT PLANT
PP3

PID No. D-3-3 -MP-1
DRAWN CAD DATE
CHKD
DESIGN
REV 01

Monenco Consultants Limited

WORK ORDER No. DSS 8279-3

REG. No. 204058

B

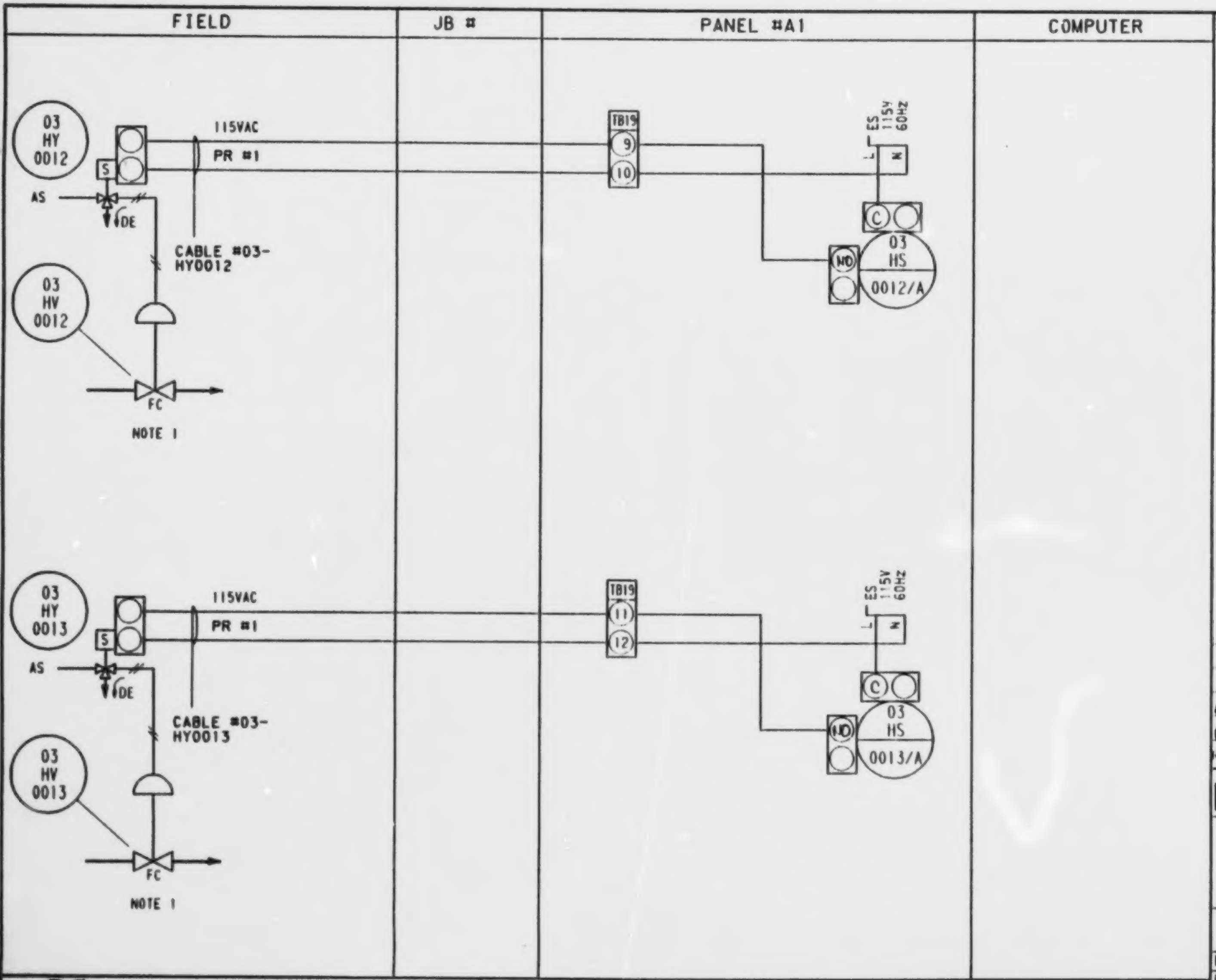

NOTES:

1. HAND STATION OPENS OR CLOSES VALVE. SWITCH POSITION VIEWED FROM PANEL FRONT:

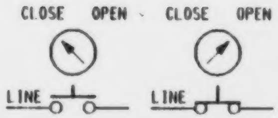

2. HAND STATION OPENS OR CLOSES VALVE. SWITCH POSITION VIEWED FROM PANEL FRONT:

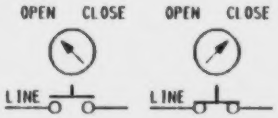

GENERAL NOTES:

A. 24 VAC Power Supply from GFC, Hammond Series Power Supply in panel.

B. 4-20mA signals to computer are shunted by EMR with a resistor to provide voltage signal to computer card.

C. Compatibility of voltage signals to computer programmed by EMR.

REV	DATE	DESCRIPTION	CHK	MEC APP	EMR APP
01	86.09	PH.1 FINAL	ck	PAW	
00	86.07.16	FOR EMR APPROVAL	PAW		✓

Energy, Mines and Resources Canada — Énergie, Mines et Ressources Canada

LOOP DIAGRAM
03-H-0012/0013
AREA 3
REACTOR AND SAMPLING SYSTEM

EMR COPROCESSING PILOT PLANT
PP3

PID No.	D-3-3 -MP-1		
DRAWN	CAD	DATE	
CHKD			REV
DESIGN			01

Monenco Consultants Limited | WORK ORDER No. DSS 8279-3 | REG. No. 204059

LOOP13

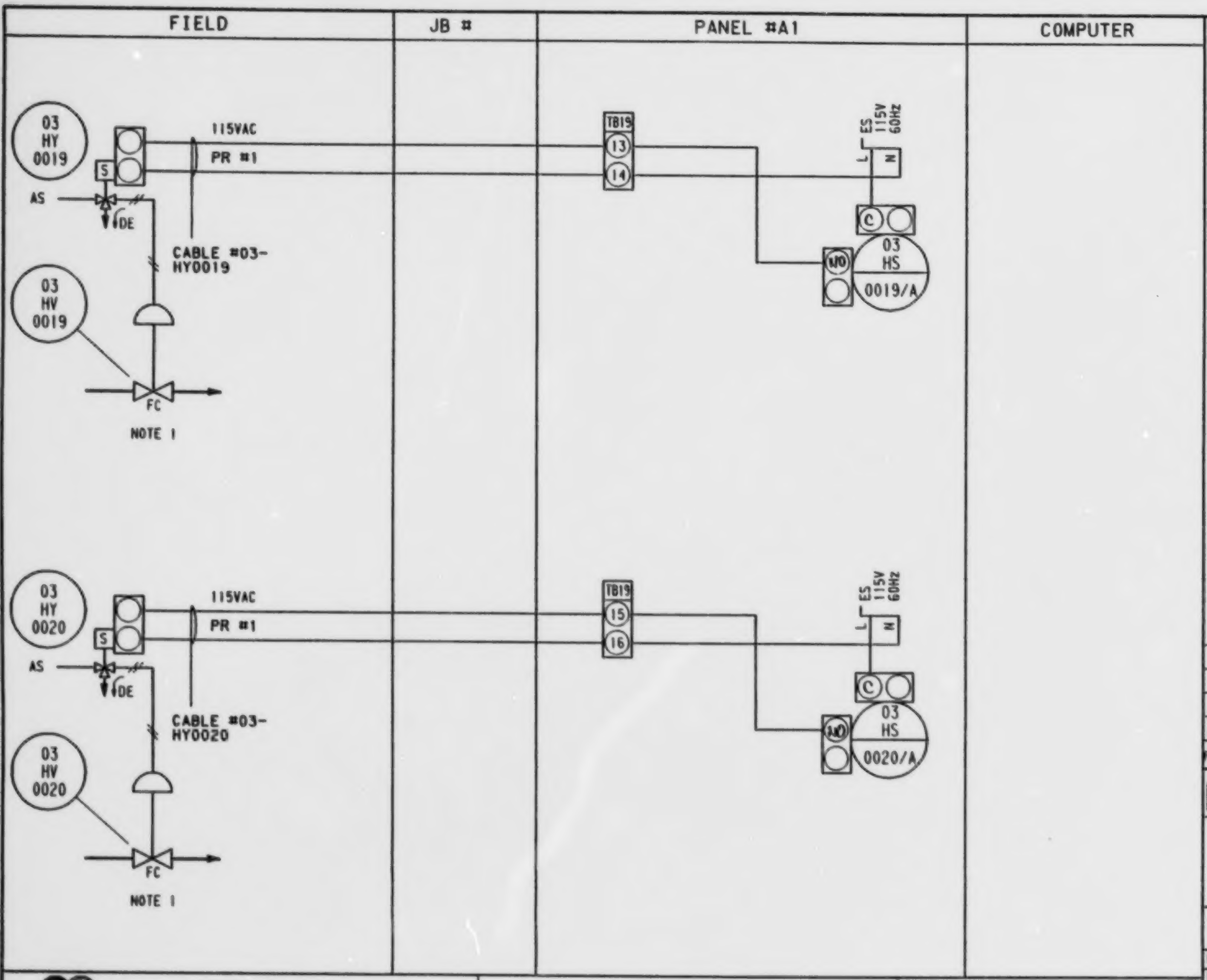

NOTES:

1. HAND STATION OPENS OR CLOSES VALVE. SWITCH POSITION VIEWED FROM PANEL FRONT:

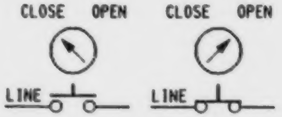

2. HAND STATION OPENS OR CLOSES VALVE. SWITCH POSITION VIEWED FROM PANEL FRONT:

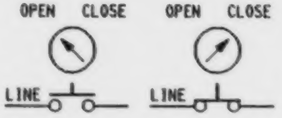

GENERAL NOTES:

A. 24 VAC Power Supply from GFC, Hammond Series Power Supply in panel.

B. 4-20mA signals to computer are shunted by EMR with a resistor to provide voltage signal to computer card.

C. Compatibility of voltage signals to computer programmed by EMR.

REV	DATE	DESCRIPTION	CHK	MEC APP	EMR APP
01	86.09	PH.4 FINAL	CP	RAJ	
00	86.01.21	FOR EMR APPROVAL	RAJ		✓

Energy, Mines and Resources Canada / Énergie, Mines et Ressources Canada

LOOP DIAGRAM
03-H-0019/0020
AREA 3
REACTOR AND SAMPLING SYSTEM

EMR COPROCESSING PILOT PLANT
PP3

PID No.	D-3-3 -MP-1		
DRAWN	CAD	DATE	86.07.03
CHKD			REV
DESIGN			01

LOOP13

Monenco Consultants Limited

WORK ORDER No. DSS 8279-3

REG. No. 204060

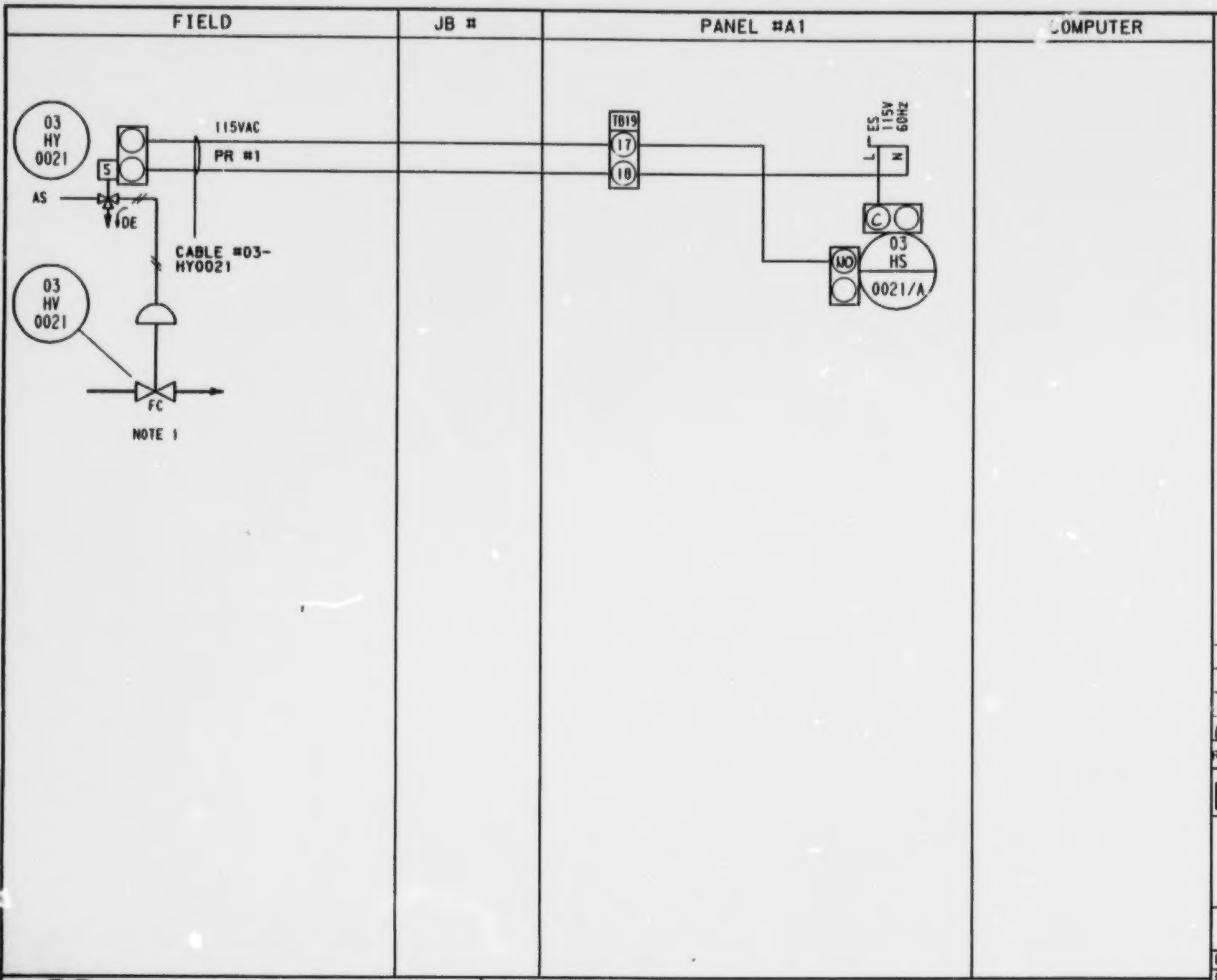

NOTES:

1. HAND STATION OPENS OR CLOSES VALVE. SWITCH POSITION VIEWED FROM PANEL FRONT:

   CLOSE OPEN — CLOSE OPEN — LINE — LINE

2. HAND STATION OPENS OR CLOSES VALVE. SWITCH POSITION VIEWED FROM PANEL FRONT:

   OPEN CLOSE — OPEN CLOSE — LINE — LINE

GENERAL NOTES:

A. 24 VAC Power Supply from GFC, Hammond Series Power Supply in panel.

B. 4-20mA signals to computer are shunted by EMR with a resistor to provide voltage signal to computer card.

C. Compatibility of voltage signals to computer programmed by EMR.

REV	DATE	DESCRIPTION	CHK	MEC APP	EMR APP
01	86.09	PH.1 FINAL	CP	RW	
00	86.07.21	FOR EMR APPROVAL	RW		✓

Energy, Mines and Resources Canada — Énergie, Mines et Ressources Canada

LOOP DIAGRAM
03-H-0021
AREA 3
REACTOR AND SAMPLING SYSTEM

EMR COPROCESSING PILOT PLANT
PP3

PID No.	D-3-3 -MP-1		
DRAWN	CAD	DATE	86.07.03
CHKD			REV
DESIGN			01

Monenco Consultants Limited — WORK ORDER No. DSS 8279-3 — REG. No. 204061

LOOP13

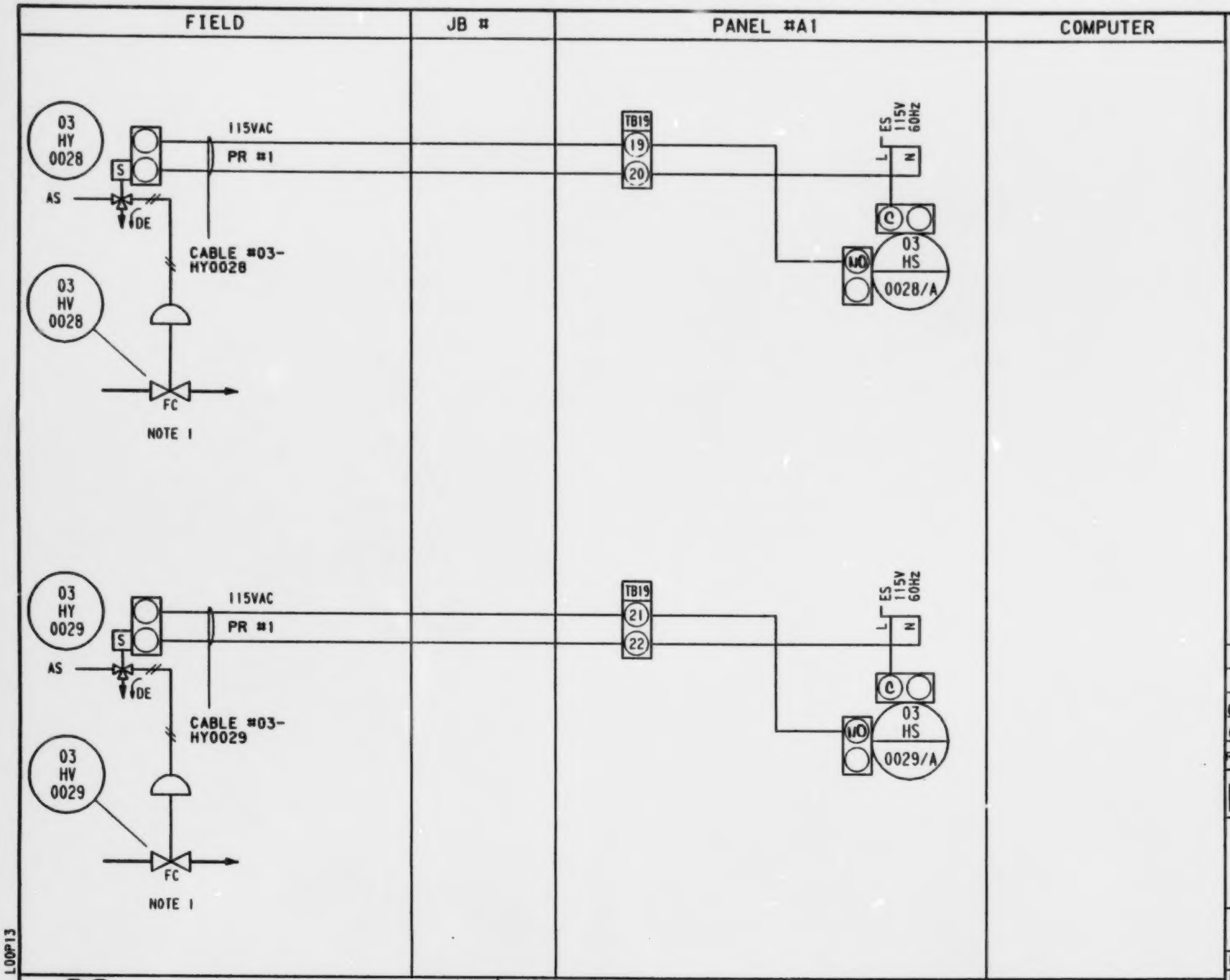

NOTES:

1. HAND STATION OPENS OR CLOSES VALVE. SWITCH POSITION VIEWED FROM PANEL FRONT:

2. HAND STATION OPENS OR CLOSES VALVE. SWITCH POSITION VIEWED FROM PANEL FRONT:

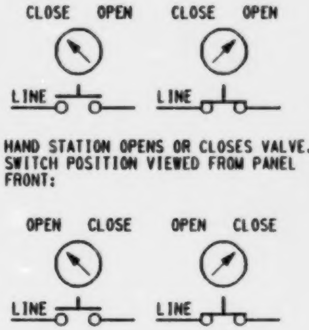

GENERAL NOTES:

A. 24 VAC Power Supply from GFC, Hammond Series Power Supply in panel.

B. 4-20mA signals to computer are shunted by EMR with a resistor to provide voltage signal to computer card.

C. Compatibility of voltage signals to computer programmed by EMR.

REV	DATE	DESCRIPTION	CHK	MEC APP	EMR APP
01	86.09	PH.1 FINAL	CP	BAW	
00	86.01.16	FOR EMR APPROVAL	BAW		✓

Energy, Mines and Resources Canada — Énergie, Mines et Ressources Canada

LOOP DIAGRAM
03-H-0028/0029
AREA 3
REACTOR AND SAMPLING SYSTEM

EMR COPROCESSING PILOT PLANT
PP3

PID No.	D-3-3 -MP-2
DRAWN	CAD DATE
CHKD	
DESIGN	REV 01

Monenco Consultants Limited

WORK ORDER No. DSS 8279-3

REG. No. 204062

LOOP13

B

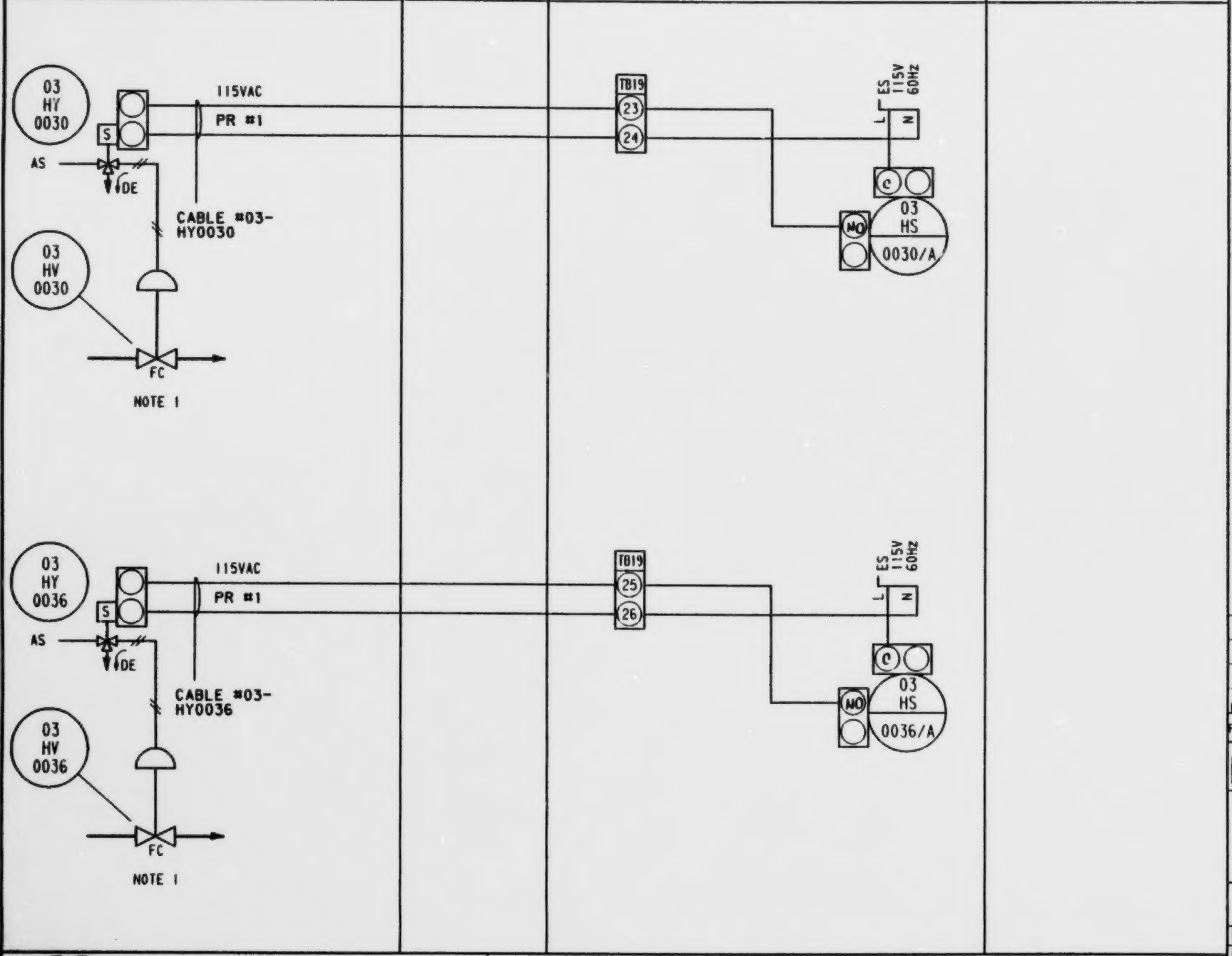

NOTES:

1. HAND STATION OPENS OR CLOSES VALVE. SWITCH POSITION VIEWED FROM PANEL FRONT:

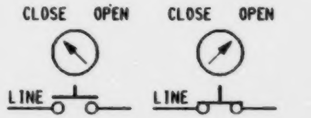

2. HAND STATION OPENS OR CLOSES VALVE. SWITCH POSITION VIEWED FROM PANEL FRONT:

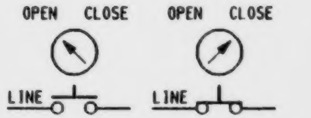

GENERAL NOTES:

A. 24 VAC Power Supply from GFC, Hammond Series Power Supply in panel.

B. 4-20mA signals to computer are shunted by EMR with a resistor to provide voltage signal to computer card.

C. Compatibility of voltage signals to computer programmed by EMR.

REV	DATE	DESCRIPTION	CHK	MEC APP	EMR APP
01	86.09	PH.1 FINAL	LP	RW	
00	86.07.16	FOR EMR APPROVAL	RW		✓

Energy, Mines and Resources Canada — Énergie, Mines et Ressources Canada

LOOP DIAGRAM
03-H-0030/0036
AREA 3
REACTOR AND SAMPLING SYSTEM

EMR COPROCESSING PILOT PLANT
PP3

PID No.	D-3-3 -MP-2	
DRAWN	CAD	DATE
CHKD		REV 01
DESIGN		

Monenco Consultants Limited | WORK ORDER No. DSS 8279-3 | REG. No. 204063

LOOP13

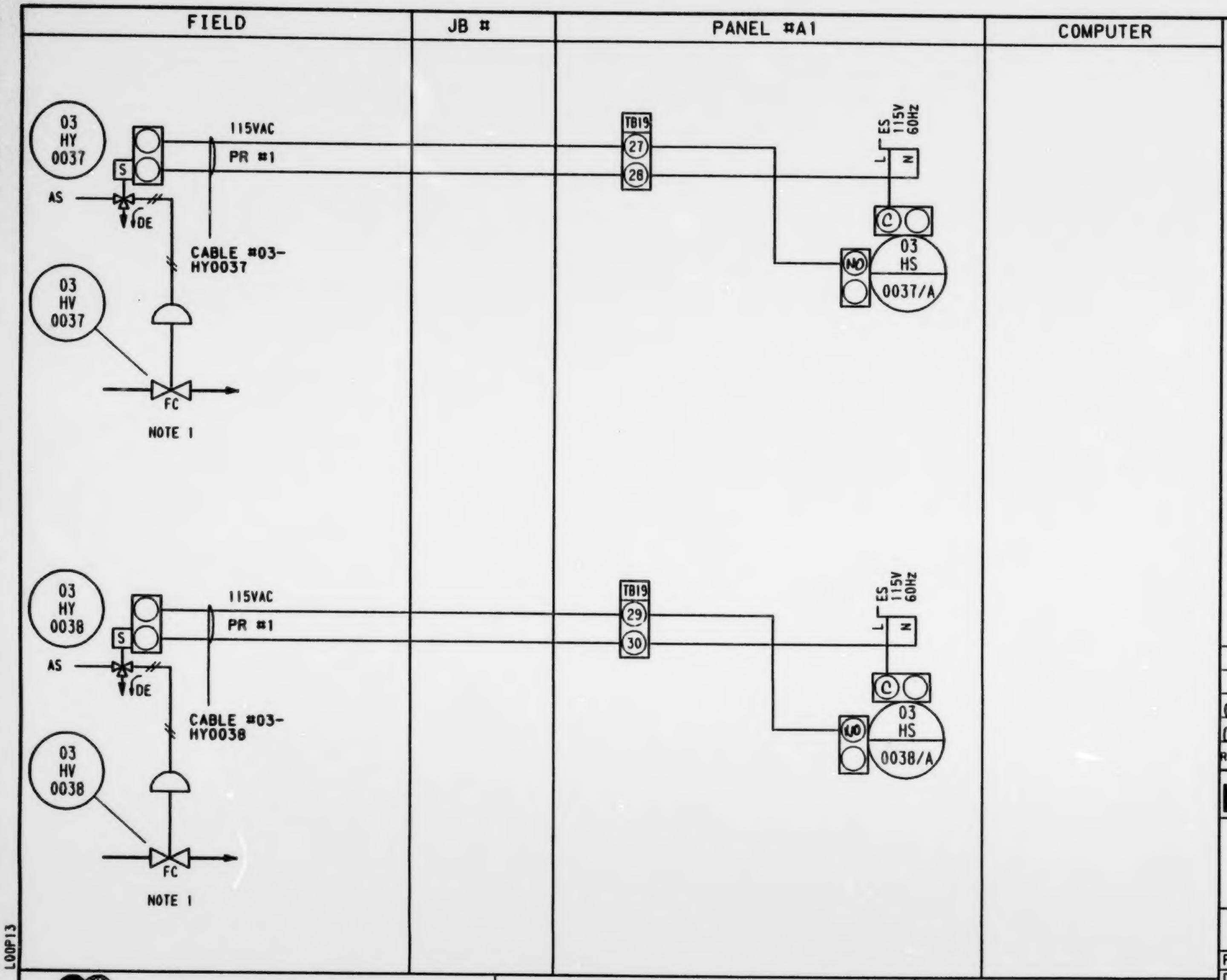

NOTES:

1. HAND STATION OPENS OR CLOSES VALVE. SWITCH POSITION VIEWED FROM PANEL FRONT:

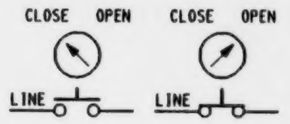

2. HAND STATION OPENS OR CLOSES VALVE. SWITCH POSITION VIEWED FROM PANEL FRONT:

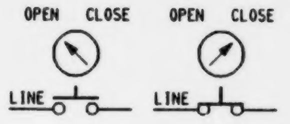

GENERAL NOTES:

A. 24 VAC Power Supply from GFC, Hammond Series Power Supply in panel.

B. 4-20mA signals to computer are shunted by EMR with a resistor to provide voltage signal to computer card.

C. Compatibility of voltage signals to computer programmed by EMR.

REV	DATE	DESCRIPTION	CHK	MEC APP	EMR APP
01	86.09	PH.1 FINAL	CP	RAW	
00	86.07.16	FOR EMR APPROVAL	RAW		✓

Energy, Mines and Resources Canada — Énergie, Mines et Ressources Canada

LOOP DIAGRAM
03-H-0037/0038
AREA 3
REACTOR AND SAMPLING SYSTEM

EMR COPROCESSING PILOT PLANT
PP3

PID No. D-3-3 -MP-2
DRAWN CAD DATE
CHKD
DESIGN
REV 01

Monenco Consultants Limited

WORK ORDER No. DSS 8279-3

REG. No. 204064

LOOP13

B

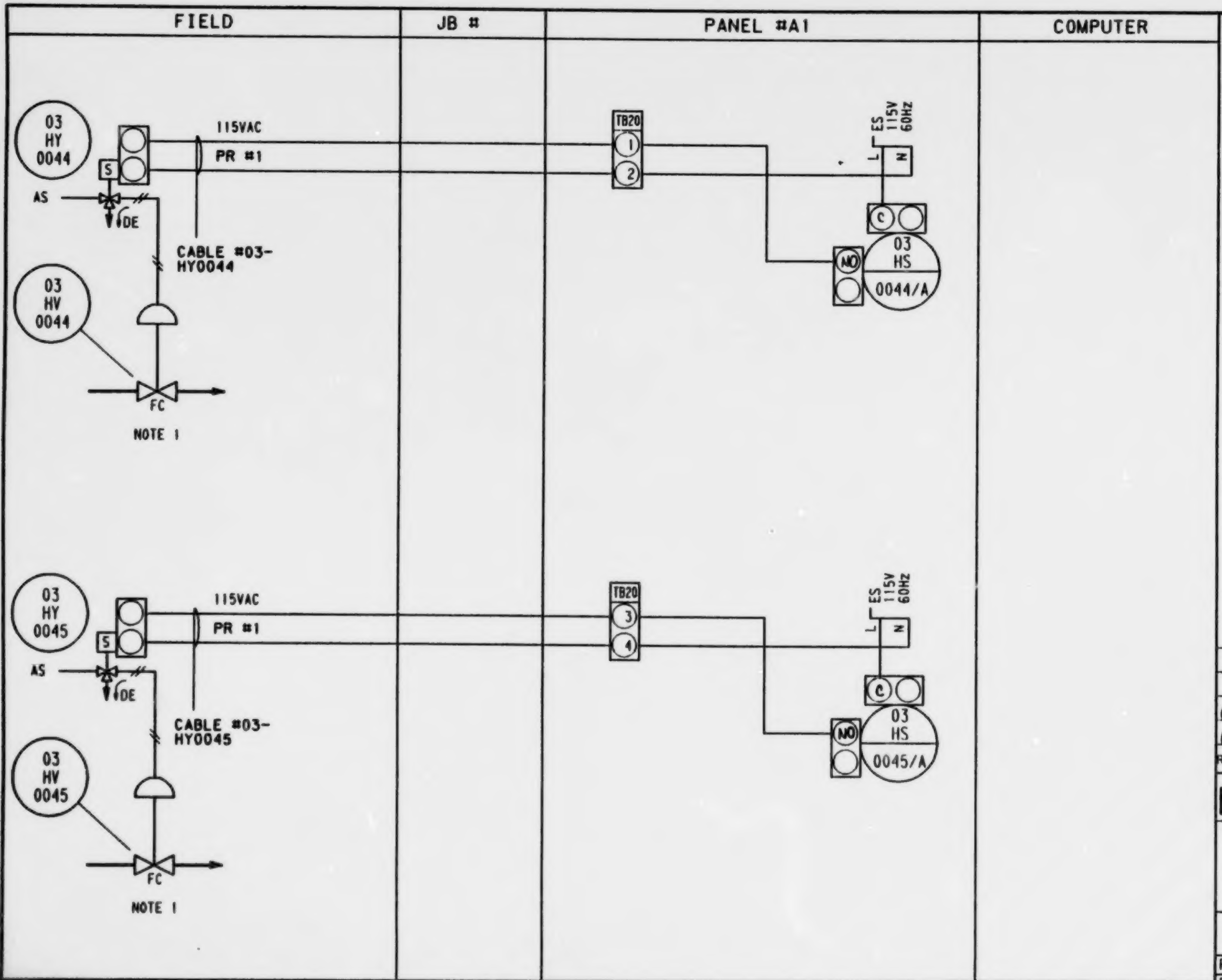

NOTES:

1. HAND STATION OPENS OR CLOSES VALVE. SWITCH POSITION VIEWED FROM PANEL FRONT:

   CLOSE OPEN — CLOSE OPEN

   LINE — LINE

2. HAND STATION OPENS OR CLOSES VALVE. SWITCH POSITION VIEWED FROM PANEL FRONT:

   OPEN CLOSE — OPEN CLOSE

   LINE — LINE

GENERAL NOTES:

A. 24 VAC Power Supply from GFC, Hammond Series Power Supply in panel.

B. 4-20mA signals to computer are shunted by EMR with a resistor to provide voltage signal to computer card.

C. Compatibility of voltage signals to computer programmed by EMR.

REV	DATE	DESCRIPTION	CHK	MEC APP	EMR APP
01	86.09	PH.1 FINAL	CP	RAW	
00	86.07.15	FOR EMR APPROVAL	RAW		✓

Energy, Mines and Resources Canada — Énergie, Mines et Ressources Canada

LOOP DIAGRAM
03-H-0044/0045
AREA 3
REACTOR AND SAMPLING SYSTEM

EMR COPROCESSING PILOT PLANT
PP3

PID No.	D-3-3 -MP-2		
DRAWN		CAD	DATE
CHKD			REV
DESIGN			01

Monenco Consultants Limited

WORK ORDER No. DSS 8279-3

REG. No. 204065

LOOP13

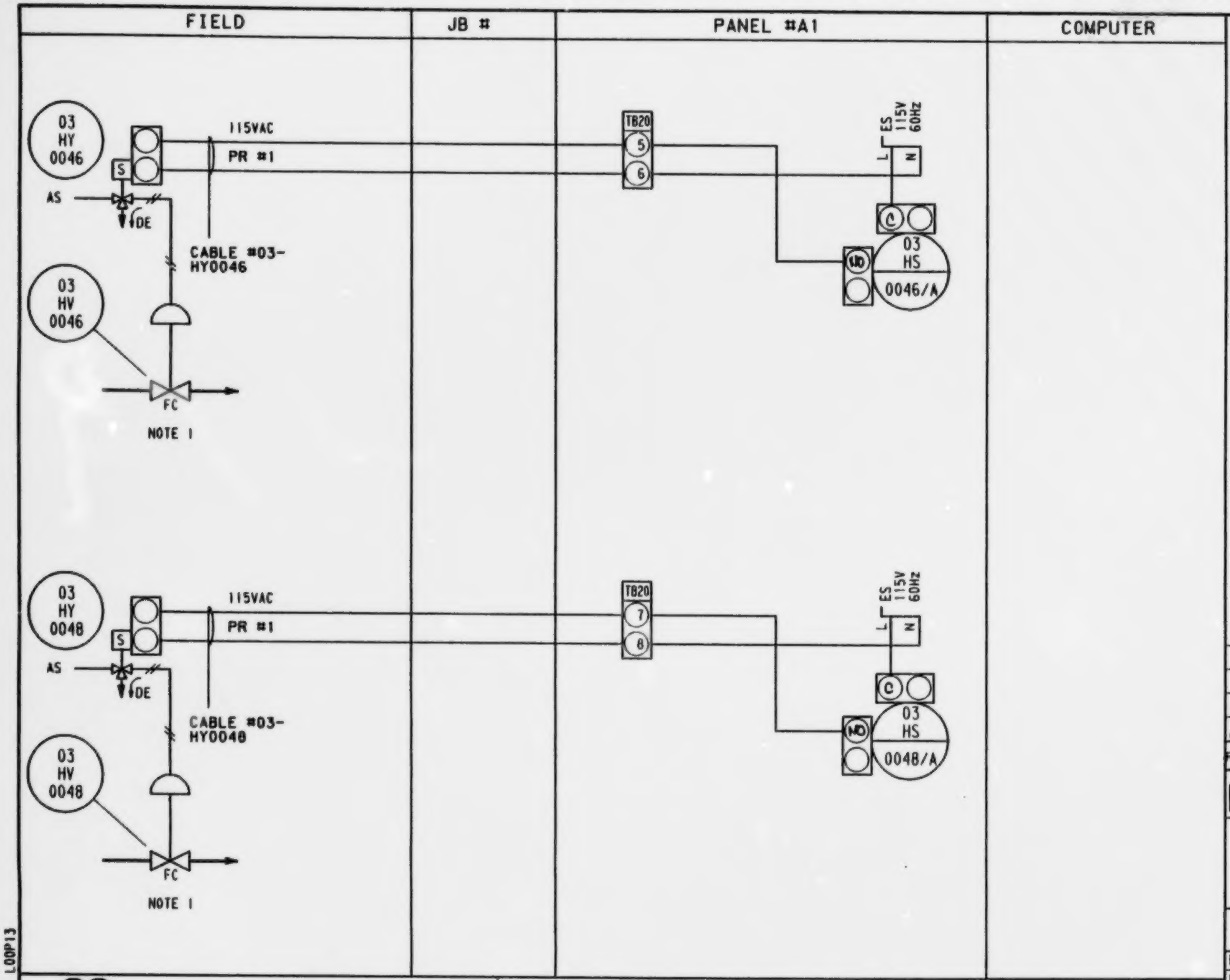

NOTES:

1. HAND STATION OPENS OR CLOSES VALVE. SWITCH POSITION VIEWED FROM PANEL FRONT:

   CLOSE OPEN — CLOSE OPEN
   LINE — LINE

2. HAND STATION OPENS OR CLOSES VALVE. SWITCH POSITION VIEWED FROM PANEL FRONT:

   OPEN CLOSE — OPEN CLOSE
   LINE — LINE

GENERAL NOTES:

A. 24 VAC Power Supply from GFC, Hammond Series Power Supply in panel.

B. 4-20mA signals to computer are shunted by EMR with a resistor to provide voltage signal to computer card.

C. Compatibility of voltage signals to computer programmed by EMR.

REV	DATE	DESCRIPTION	CHK	MEC APP	EMR APP
01	86.09	PH.1 FINAL	cl	RPW	
00	86.0116	FOR EMR APPROVAL	RPW		✓

Energy, Mines and Resources Canada — Énergie, Mines et Ressources Canada

LOOP DIAGRAM
03-H-0046/0048
AREA 3
REACTOR AND SAMPLING SYSTEM

EMR COPROCESSING PILOT PLANT
PP3

PID No.	D-3-3 -MP-2
DRAWN	CAD DATE
CHKD	REV 01
DESIGN	

Monenco Consultants Limited

WORK ORDER No. DSS 8279-3

REG. No. 204066

LOOP13

B

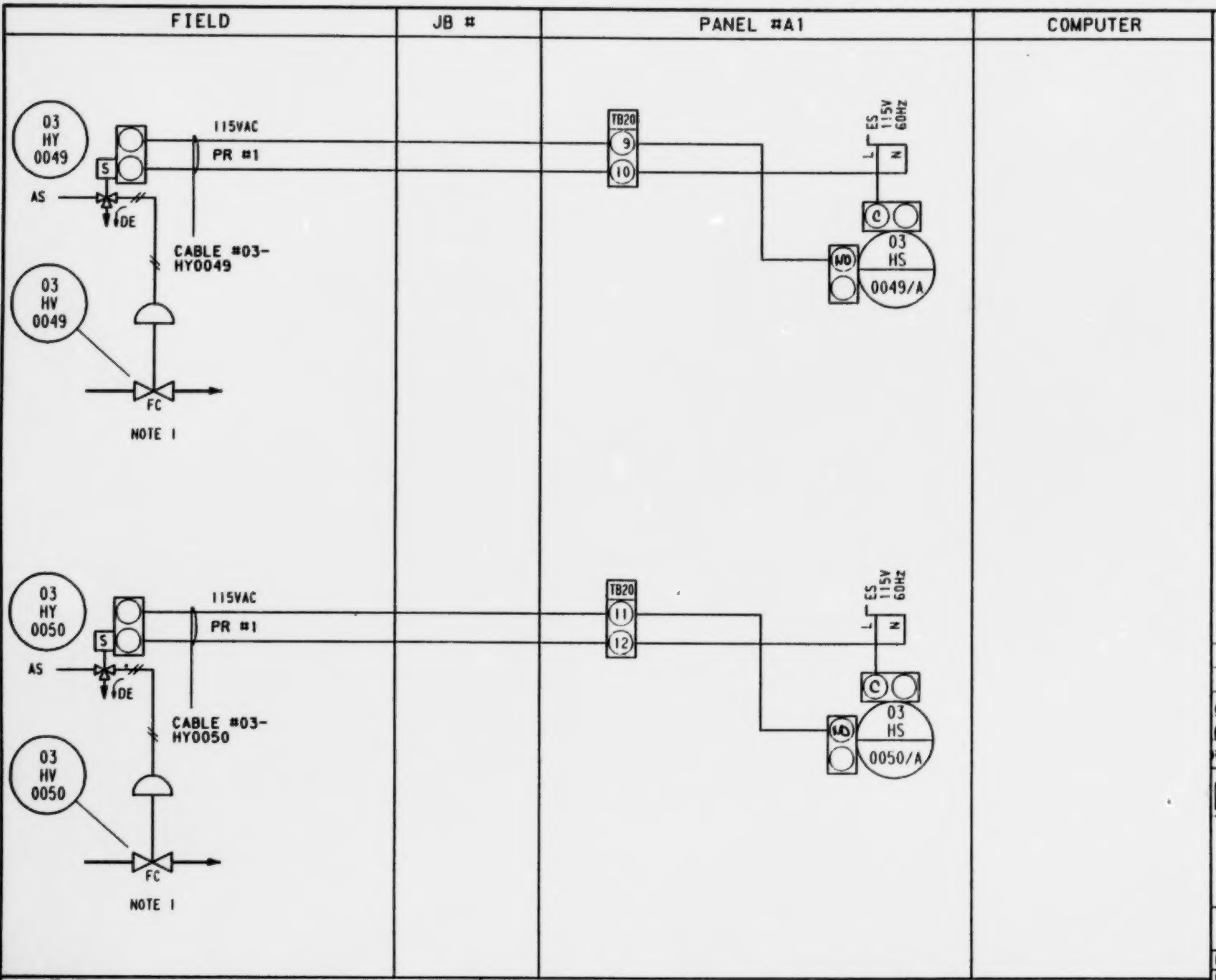

NOTES:

1. HAND STATION OPENS OR CLOSES VALVE. SWITCH POSITION VIEWED FROM PANEL FRONT:

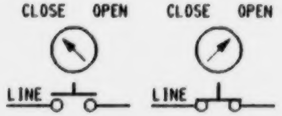

2. HAND STATION OPENS OR CLOSES VALVE. SWITCH POSITION VIEWED FROM PANEL FRONT:

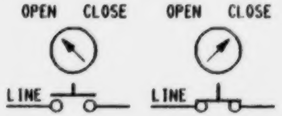

GENERAL NOTES:

A. 24 VAC Power Supply from GFC, Hammond Series Power Supply in panel.

B. 4-20mA signals to computer are shunted by EMR with a resistor to provide voltage signal to computer card.

C. Compatibility of voltage signals to computer programmed by EMR.

REV	DATE	DESCRIPTION	CHK	MEC APP	EMR APP
01	86.09	PH.4 FINAL	cP	RPW	
00	86.07.16	FOR EMR APPROVAL	RPW		✓

Energy, Mines and Resources Canada — Énergie, Mines et Ressources Canada

LOOP DIAGRAM
03-H-0049/0050
AREA 3
REACTOR AND SAMPLING SYSTEM

EMR COPROCESSING PILOT PLANT
PP3

PID No.	D-3-3 -MP-2
DRAWN	CAD DATE
CHKD	REV 01
DESIGN	

LOOP13

Monenco Consultants Limited

WORK ORDER No. DSS 8279-3

REG. No. 204067

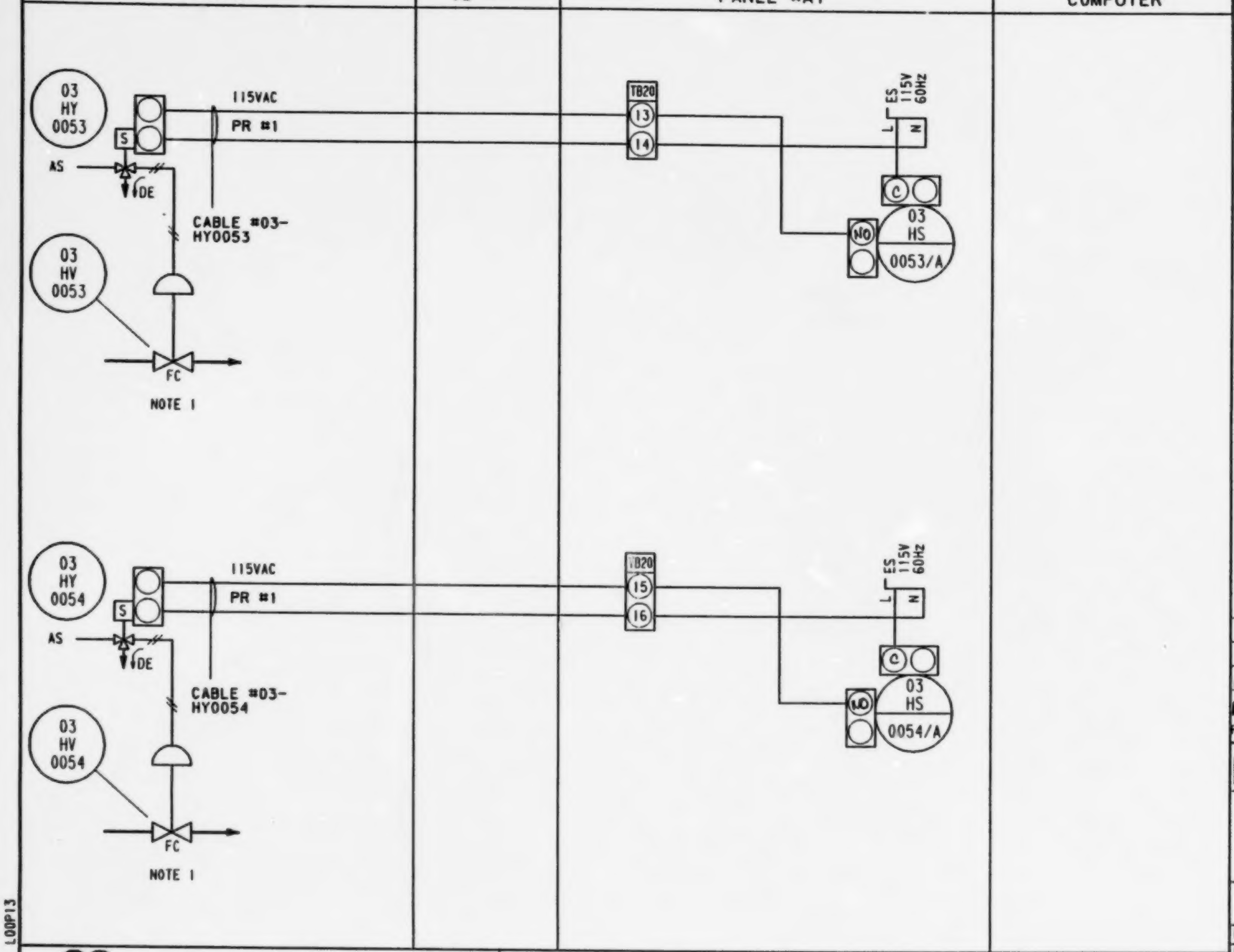

NOTES:

1. HAND STATION OPENS OR CLOSES VALVE. SWITCH POSITION VIEWED FROM PANEL FRONT:

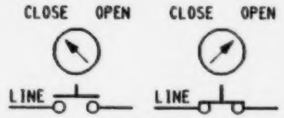

2. HAND STATION OPENS OR CLOSES VALVE. SWITCH POSITION VIEWED FROM PANEL FRONT:

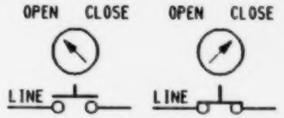

GENERAL NOTES:

A. 24 VAC Power Supply from GFC, Hammond Series Power Supply in panel.

B. 4-20mA signals to computer are shunted by EMR with a resistor to provide voltage signal to computer card.

C. Compatibility of voltage signals to computer programmed by EMR.

REV	DATE	DESCRIPTION	CHK	MEC APP	EMR APP
01	86.09	PH.1 FINAL		RAJ	
00	86.03	FOR EMR APPROVAL			✓

Energy, Mines and Resources Canada — Énergie, Mines et Ressources Canada

LOOP DIAGRAM
03-H-0053/0054
AREA 3
REACTOR AND SAMPLING SYSTEM

EMR COPROCESSING PILOT PLANT
PP3

PID No.	D-3-3 -MP-2		
DRAWN	CAD	DATE	86.07.03
CHKD		REV	01
DESIGN			

LOOP13

B Monenco Consultants Limited | WORK ORDER No. DSS 8279-3 | REG. No. 204068

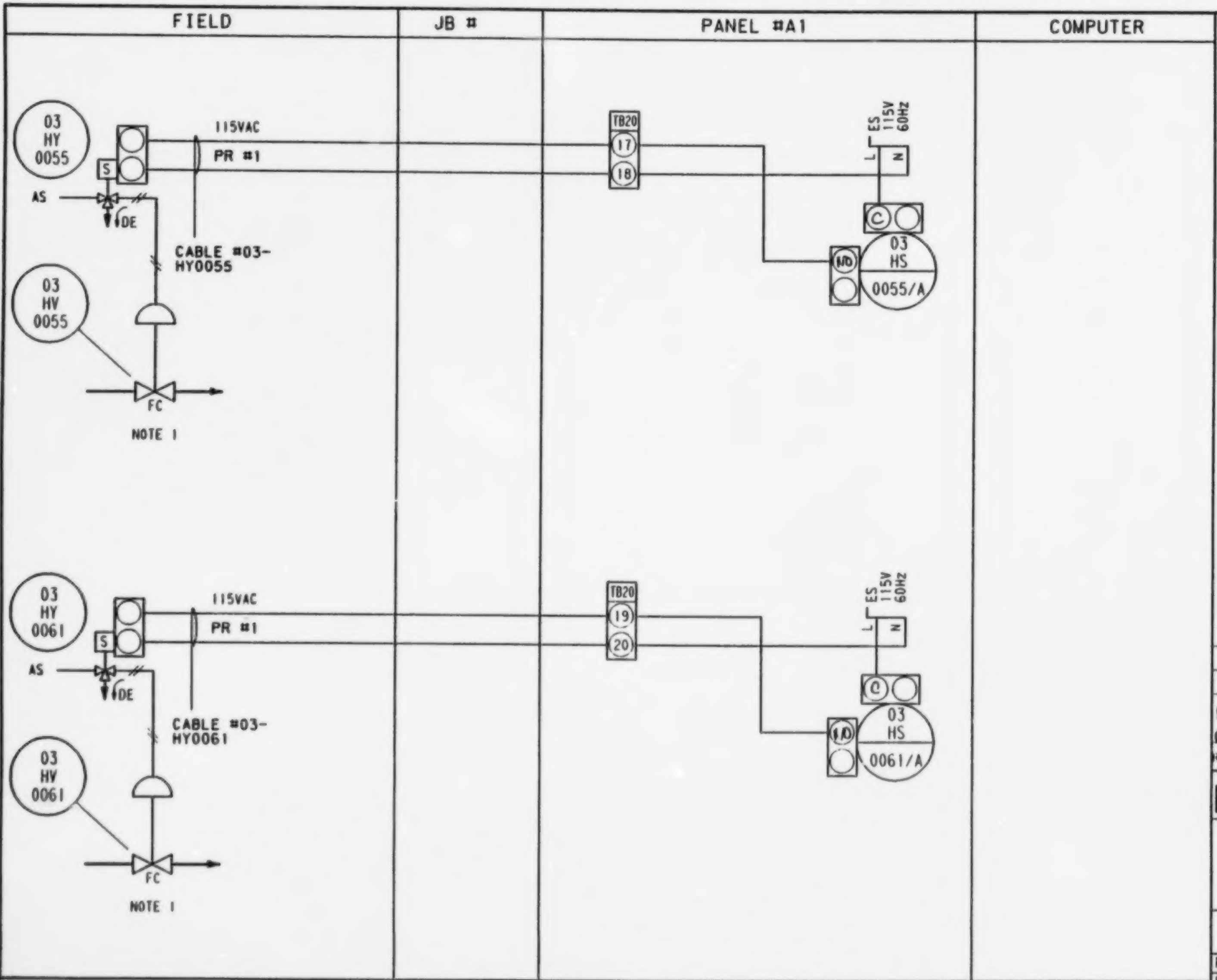

NOTES:

1. HAND STATION OPENS OR CLOSES VALVE. SWITCH POSITION VIEWED FROM PANEL FRONT:

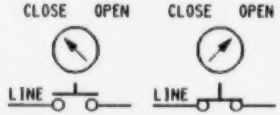

2. HAND STATION OPENS OR CLOSES VALVE. SWITCH POSITION VIEWED FROM PANEL FRONT:

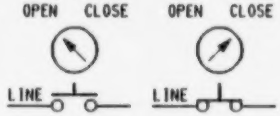

GENERAL NOTES:

A. 24 VAC Power Supply from GFC, Hammond Series Power Supply in panel.

B. 4-20mA signals to computer are shunted by EMR with a resistor to provide voltage signal to computer card.

C. Compatibility of voltage signals to computer programmed by EMR.

REV	DATE	DESCRIPTION	CHK	MEC APP	EMR APP
01	86.09	A1.1 FINAL		RAW	
00	86.01.16	FOR EMR APPROVAL	RAW		✓

Energy, Mines and Resources Canada — Énergie, Mines et Ressources Canada

LOOP DIAGRAM
03-H-0055/0061
AREA 3
REACTOR AND SAMPLING SYSTEM

EMR COPROCESSING PILOT PLANT
PP3

PID No. D-3-3 -MP-2
DRAWN — CAD — DATE
CHKD
DESIGN
REV 01

Monenco Consultants Limited | WORK ORDER No. DSS 8279-3 | REG. No. 204069

LOOP13

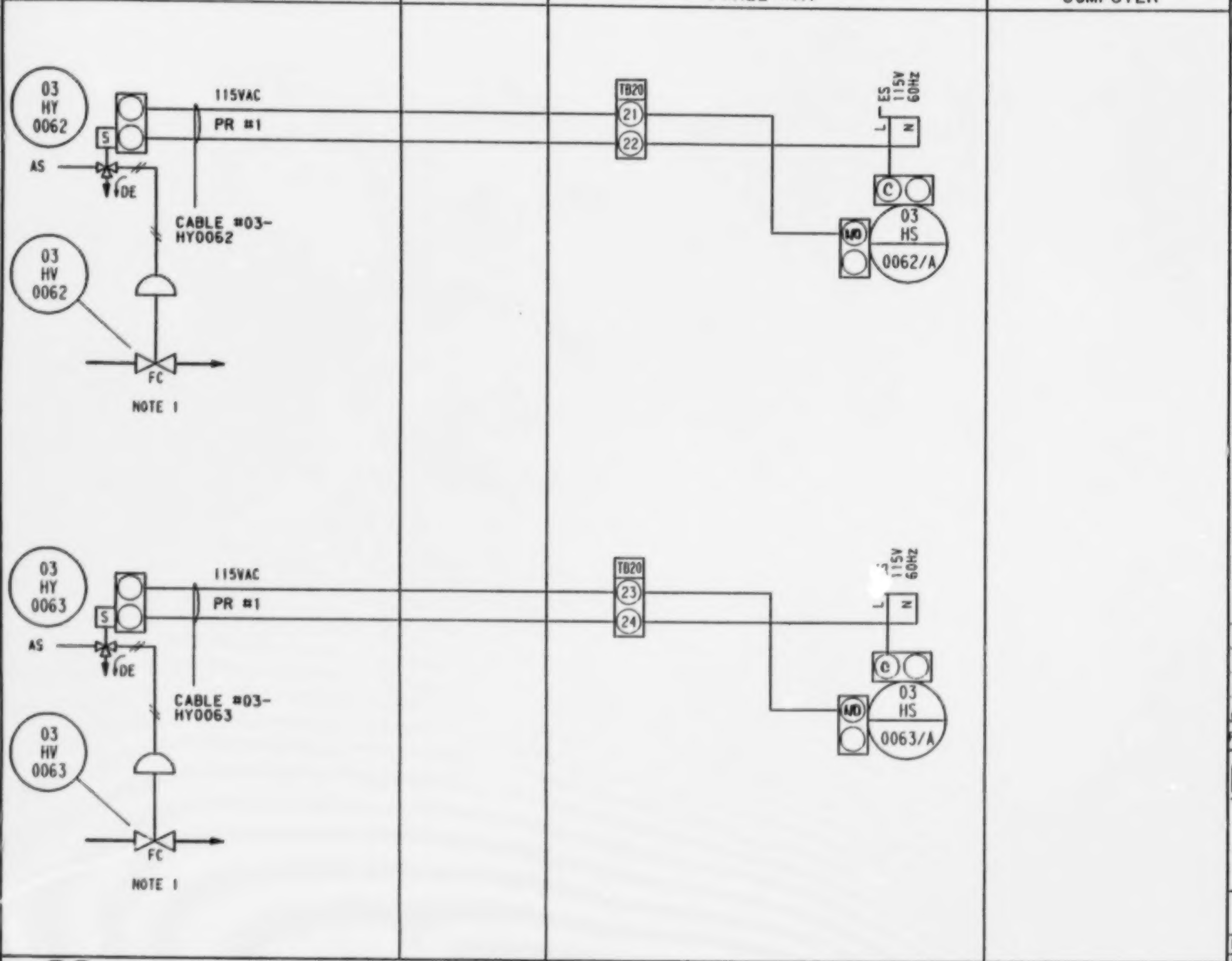

NOTES:

1. HAND STATION OPENS OR CLOSES VALVE. SWITCH POSITION VIEWED FROM PANEL FRONT:

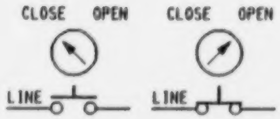

2. HAND STATION OPENS OR CLOSES VALVE. SWITCH POSITION VIEWED FROM PANEL FRONT:

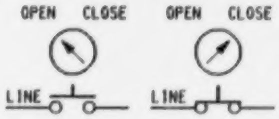

GENERAL NOTES:

A. 24 VAC Power Supply from GFC, Hammond Series Power Supply in panel.

B. 4-20mA signals to computer are shunted by EMR with a resistor to provide voltage signal to computer card.

C. Compatibility of voltage signals to computer programmed by EMR.

REV	DATE	DESCRIPTION	CHK	MEC APP	EMR APP
01	86.09	PH.1 FINAL	✓	[illegible]	
00	86.01.15	FOR EMR APPROVAL	[illegible]		✓

Energy, Mines and Resources Canada — Énergie, Mines et Ressources Canada

LOOP DIAGRAM
03-H-0062/0063
AREA 3
REACTOR AND SAMPLING SYSTEM

EMR COPROCESSING PILOT PLANT PP3

PID No.	D-3-3 -MP-2
DRAWN	CAD DATE
CHKD	REV 01
DESIGN	

Monenco Consultants Limited

WORK ORDER No. DSS 8279-3

REG. No. 204070

LOOP13

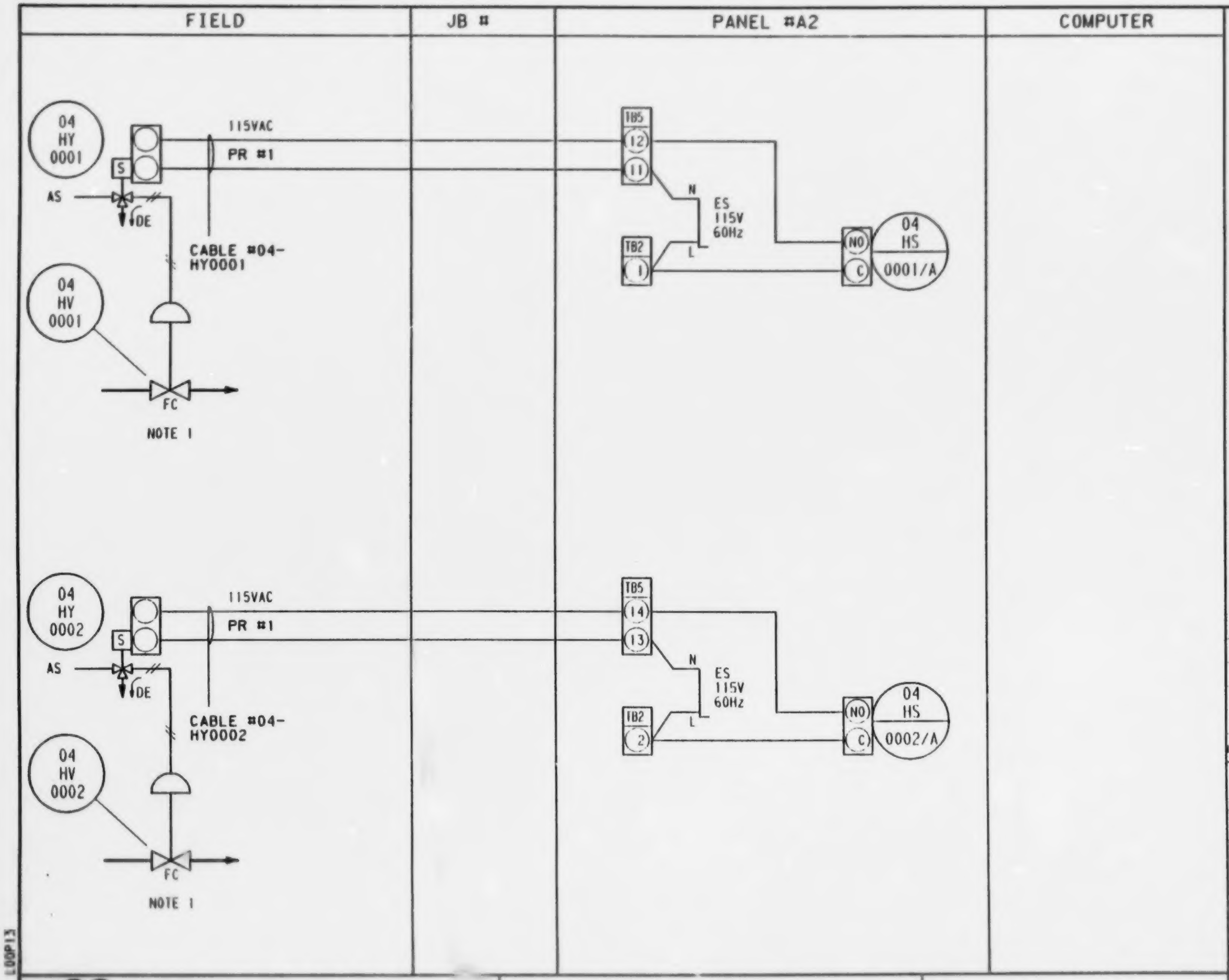

NOTES:

1. HAND STATION OPENS OR CLOSES VALVE. SWITCH POSITION VIEWED FROM PANEL FRONT:

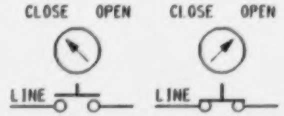

2. HAND STATION OPENS OR CLOSES VALVE. SWITCH POSITION VIEWED FROM PANEL FRONT:

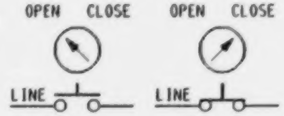

GENERAL NOTES:

A. 24 VAC Power Supply from GFC, Hammond Series Power Supply in panel.

B. 4-20mA signals to computer are shunted by EMR with a resistor to provide voltage signal to computer card.

C. Compatibility of voltage signals to computer programmed by EMR.

REV	DATE	DESCRIPTION	CHK	MEC APP	EMR APP
01	86-07	PH.1 FINAL	CP	RW	
00	86.07.15	FOR EMR APPROVAL	HW		✓

Energy, Mines and Resources Canada / Énergie, Mines et Ressources Canada

LOOP DIAGRAM
04-H-0001/0002
AREA 4
HEAVY OIL SYSTEM

EMR COPROCESSING PILOT PLANT
PP3

PID No.	D-3-4 -MP-1
DRAWN CAD	DATE 86.05.15
CHKD	REV
DESIGN	01

Monenco Consultants Limited

WORK ORDER No. DSS 8279-3

REG. No. 204045

LOOP13

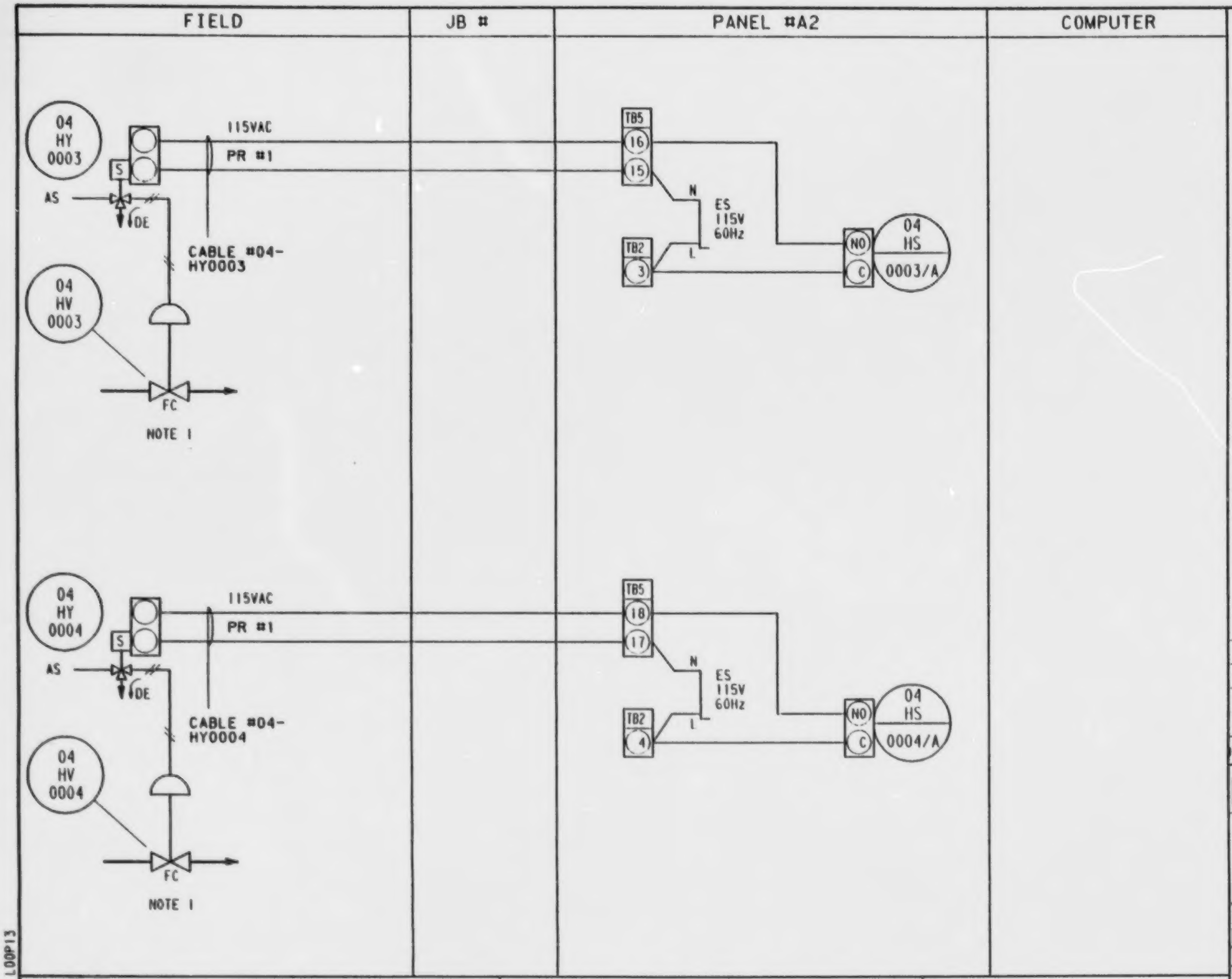

NOTES:

1. HAND STATION OPENS OR CLOSES VALVE. SWITCH POSITION VIEWED FROM PANEL FRONT:

2. HAND STATION OPENS OR CLOSES VALVE. SWITCH POSITION VIEWED FROM PANEL FRONT:

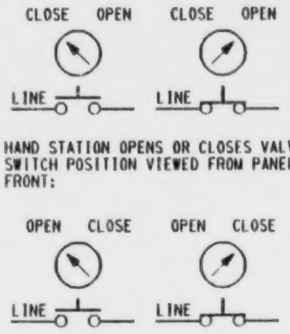

GENERAL NOTES:

A. 24 VAC Power Supply from GFC, Hammond Series Power Supply in panel.

B. 4-20mA signals to computer are shunted by EMR with a resistor to provide voltage signal to computer card.

C. Compatibility of voltage signals to computer programmed by EMR.

REV	DATE	DESCRIPTION	CHK	MEC APP	EMR APP
01	86-09-07	PH.1 FINAL	CP	RAJ	
00	86.05.15	FOR EMR APPROVAL	RW		✓

Energy, Mines and Resources Canada — Énergie, Mines et Ressources Canada

LOOP DIAGRAM
04-H-0003/0004
AREA 4
HEAVY OIL SYSTEM

EMR COPROCESSING PILOT PLANT
PP3

PID No.	D-3-4 -MP-1		
DRAWN	CAD	DATE	86.05.15
CHKD			REV
DESIGN			01

Monenco Consultants Limited

WORK ORDER No. DSS 8279-3

REG. No. 204046

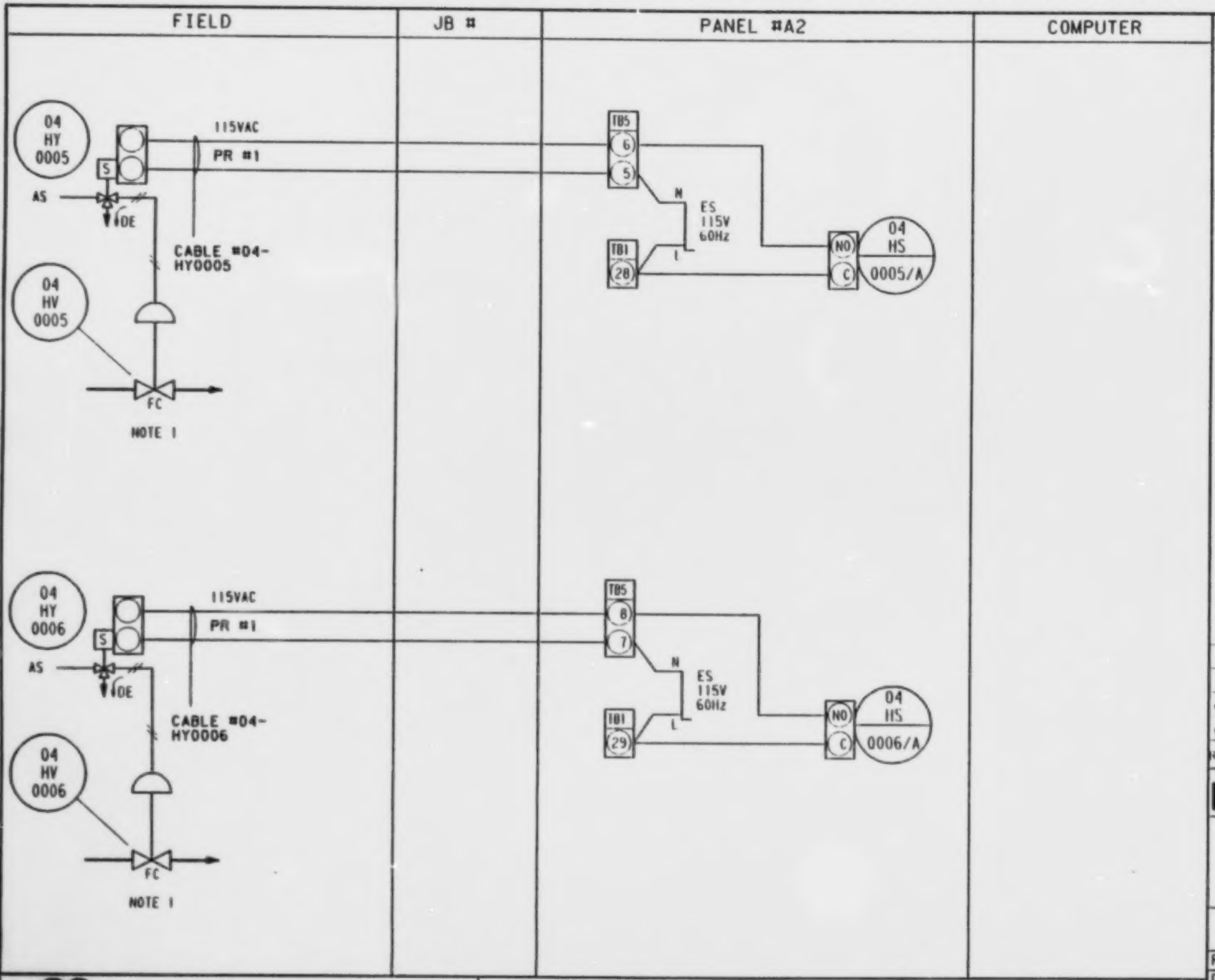

NOTES:
1. HAND STATION OPENS OR CLOSES VALVE. SWITCH POSITION VIEWED FROM PANEL FRONT:

CLOSE OPEN CLOSE OPEN

LINE LINE

2. HAND STATION OPENS OR CLOSES VALVE. SWITCH POSITION VIEWED FROM PANEL FRONT:

OPEN CLOSE OPEN CLOSE

LINE LINE

GENERAL NOTES:

A. 24 VAC Power Supply from GFC, Hammond Series Power Supply in panel.

B. 4-20mA signals to computer are shunted by EMR with a resistor to provide voltage signal to computer card.

C. Compatibility of voltage signals to computer programmed by EMR.

REV	DATE	DESCRIPTION	CHK	MEC APP	EMR APP
01	86-09-07	PH. 1 FINAL	CP	RAJ	
00	86.15	FOR EMR APPROVAL	RW		✓

Energy, Mines and Resources Canada — Énergie, Mines et Ressources Canada

LOOP DIAGRAM
04-H-0005/0006
AREA 4
HEAVY OIL SYSTEM

EMR COPROCESSING PILOT PLANT
PP3

PID No.	D-3-4 -MP-1		
DRAWN	CAD	DATE	86.07.03
CHKD			REV
DESIGN			01

Monenco Consultants Limited

WORK ORDER No. DSS 8279-3

REG. No. 204047

LOOP13

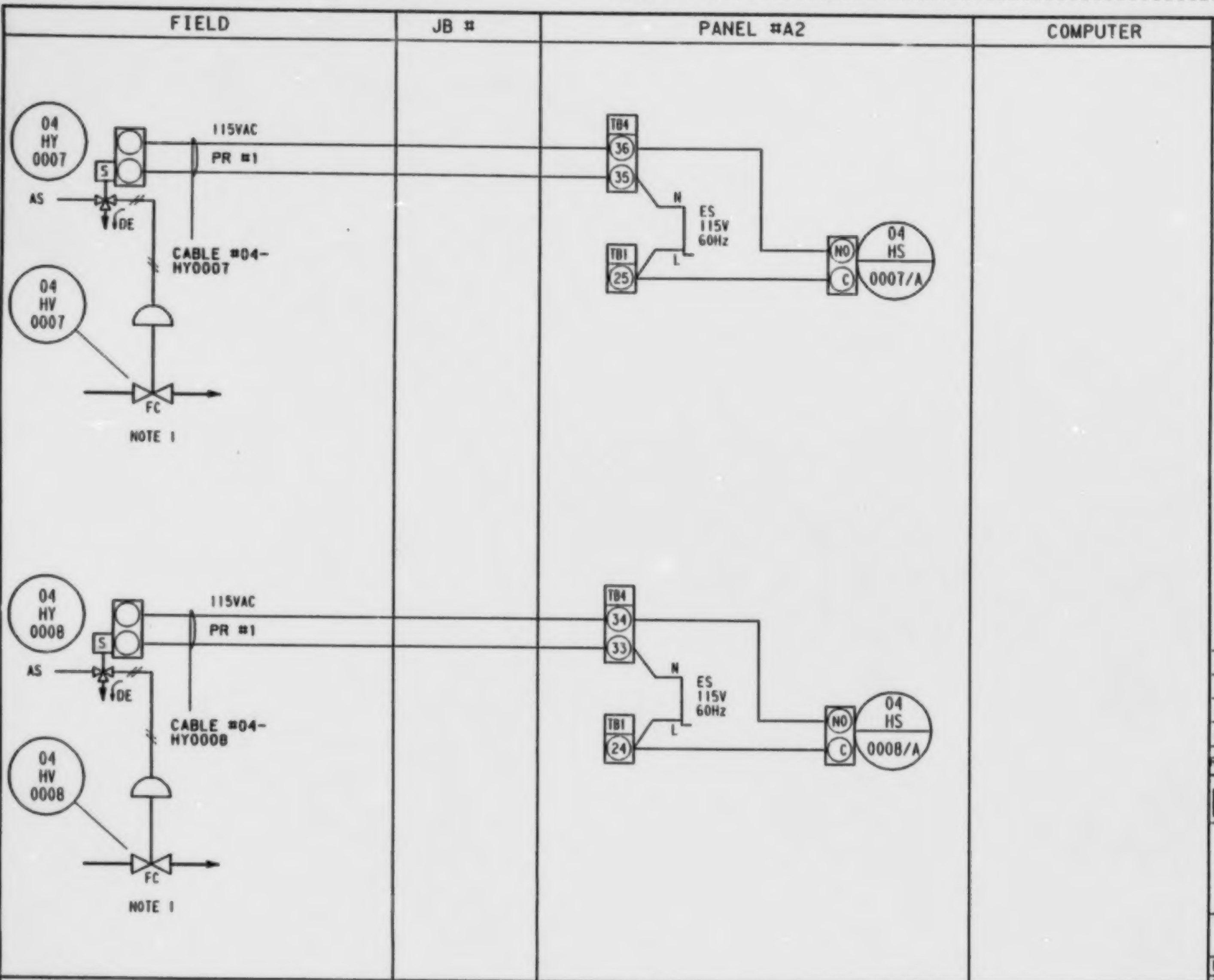

NOTES:

1. HAND STATION OPENS OR CLOSES VALVE. SWITCH POSITION VIEWED FROM PANEL FRONT:

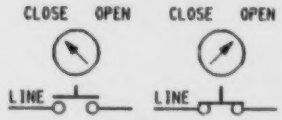

2. HAND STATION OPENS OR CLOSES VALVE. SWITCH POSITION VIEWED FROM PANEL FRONT:

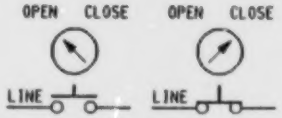

GENERAL NOTES:

A. 24 VAC Power Supply from GFC, Hammond Series Power Supply in panel.

B. 4-20mA signals to computer are shunted by EMR with a resistor to provide voltage signal to computer card.

C. Compatibility of voltage signals to computer programmed by EMR.

REV	DATE	DESCRIPTION	CHK	MEC APP	EMR APP
01	86-07	PH.1 FINAL	CP	RAJ	
00	07 86.15	FOR EMR APPROVAL	RW		✓

Energy, Mines and Resources Canada — Énergie, Mines et Ressources Canada

LOOP DIAGRAM
04-H-0007/0008
AREA 4
HEAVY OIL SYSTEM

EMR COPROCESSING PILOT PLANT
PP3

PID No.	D-3-4 -MP-1		
DRAWN	CAD	DATE	86.05.15
CHKD			REV
DESIGN			01

LOOP13

Monenco Consultants Limited | WORK ORDER No. DSS 8279-3 | REG. No. 20404B

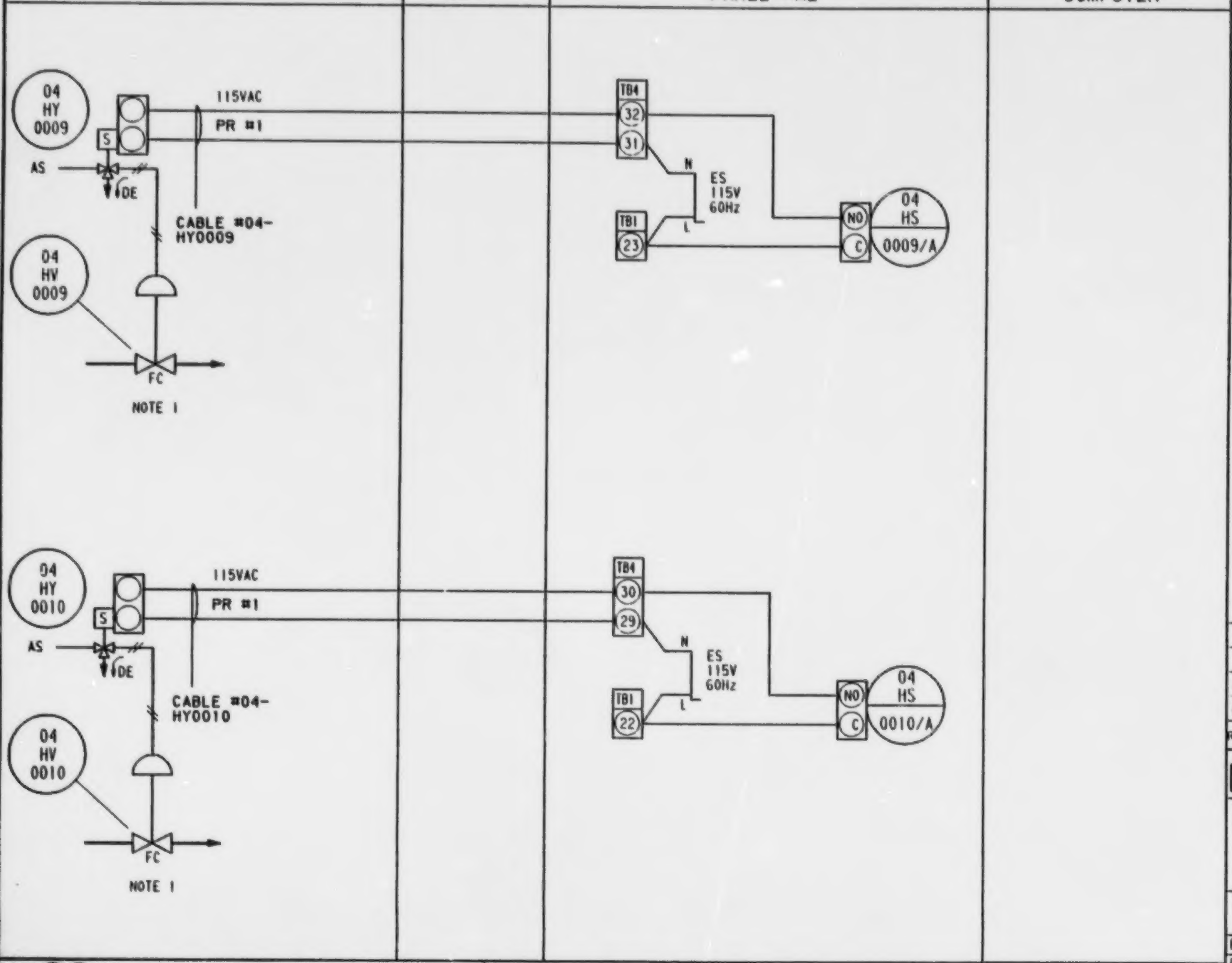

NOTES:

1. HAND STATION OPENS OR CLOSES VALVE. SWITCH POSITION VIEWED FROM PANEL FRONT:

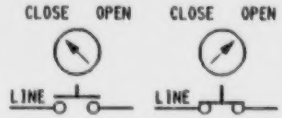

2. HAND STATION OPENS OR CLOSES VALVE. SWITCH POSITION VIEWED FROM PANEL FRONT:

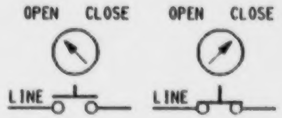

GENERAL NOTES:

A. 24 VAC Power Supply from GFC, Hammond Series Power Supply in panel.

B. 4-20mA signals to computer are shunted by EMR with a resistor to provide voltage signal to computer card.

C. Compatibility of voltage signals to computer programmed by EMR.

REV	DATE	DESCRIPTION	CHK	MEC APP	EMR APP
01	86-09	PH.1 FINAL	CP	RAJ	
00	07 86.15	FOR EMR APPROVAL	RW		✓

Energy, Mines and Resources Canada — Énergie, Mines et Ressources Canada

LOOP DIAGRAM
04-H-0009/0010
AREA 4
HEAVY OIL SYSTEM

EMR COPROCESSING PILOT PLANT
PP3

PID No.	D-3-4 -MP-1		
DRAWN	CAD	DATE	86.05.15
CHKD		REV	01
DESIGN			

Monenco Consultants Limited | WORK ORDER No. DSS 8279-3 | REG. No. 204049

LOOP13

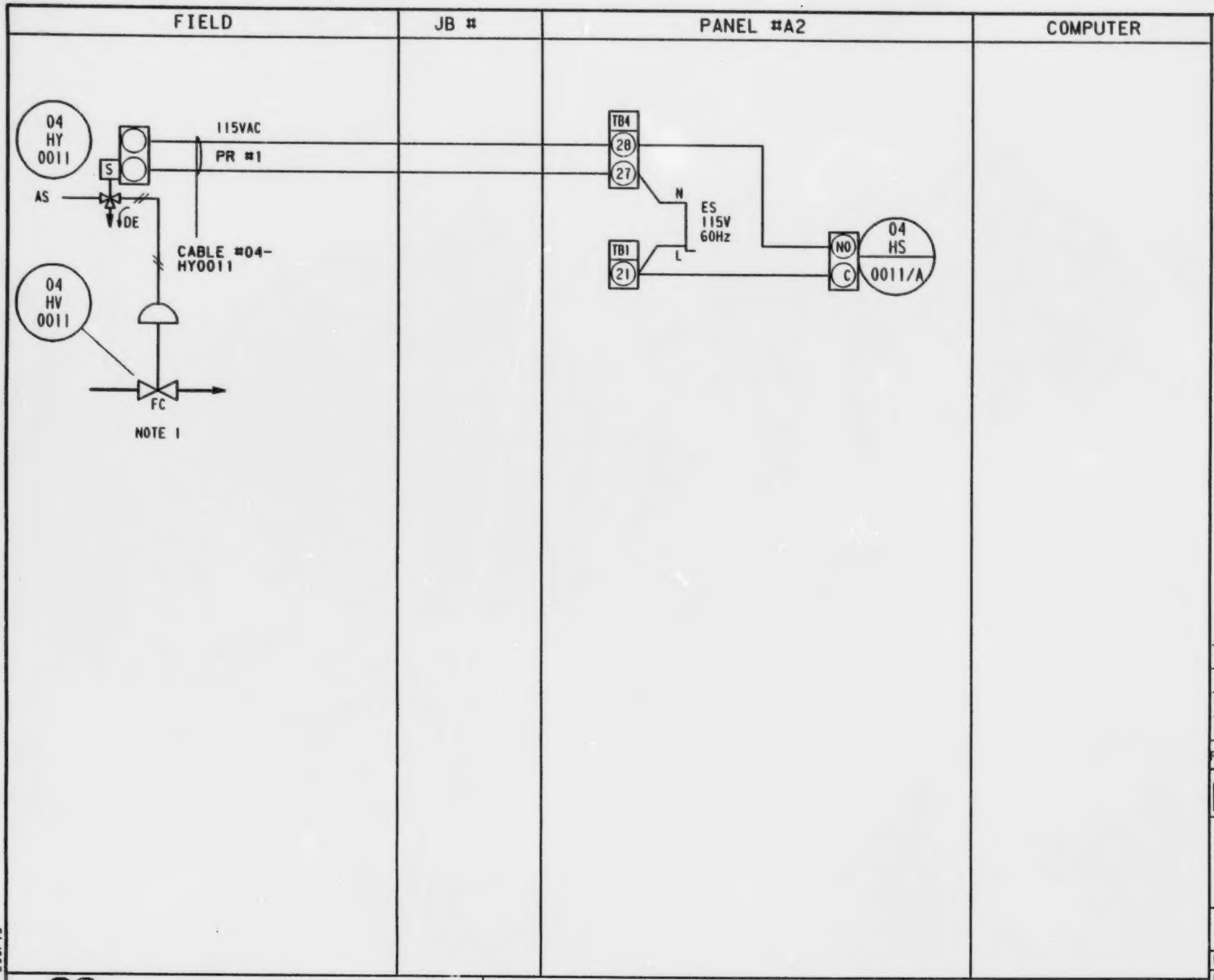

NOTES:

1. HAND STATION OPENS OR CLOSES VALVE. SWITCH POSITION VIEWED FROM PANEL FRONT:

2. HAND STATION OPENS OR CLOSES VALVE. SWITCH POSITION VIEWED FROM PANEL FRONT:

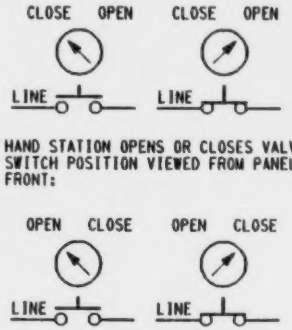

GENERAL NOTES:

A. 24 VAC Power Supply from GFC, Hammond Series Power Supply in panel.

B. 4-20mA signals to computer are shunted by EMR with a resistor to provide voltage signal to computer card.

C. Compatibility of voltage signals to computer programmed by EMR.

REV	DATE	DESCRIPTION	CHK	MEC APP	EMR APP
01	86-09	PH.1 FINAL	CP	[signature]	
00	07 86.15	FOR EMR APPROVAL	RW		✓

Energy, Mines and Resources Canada / Énergie, Mines et Ressources Canada

LOOP DIAGRAM
04-H-0011
AREA 4
HEAVY OIL SYSTEM

EMR COPROCESSING PILOT PLANT
PP3

PID No.	D-3-4 -MP-1		
DRAWN	CAD	DATE	86.05.15
CHKD		REV	01
DESIGN			

Monenco Consultants Limited | WORK ORDER No. DSS 8279-3 | REG. No. 204050

LOOP13

B

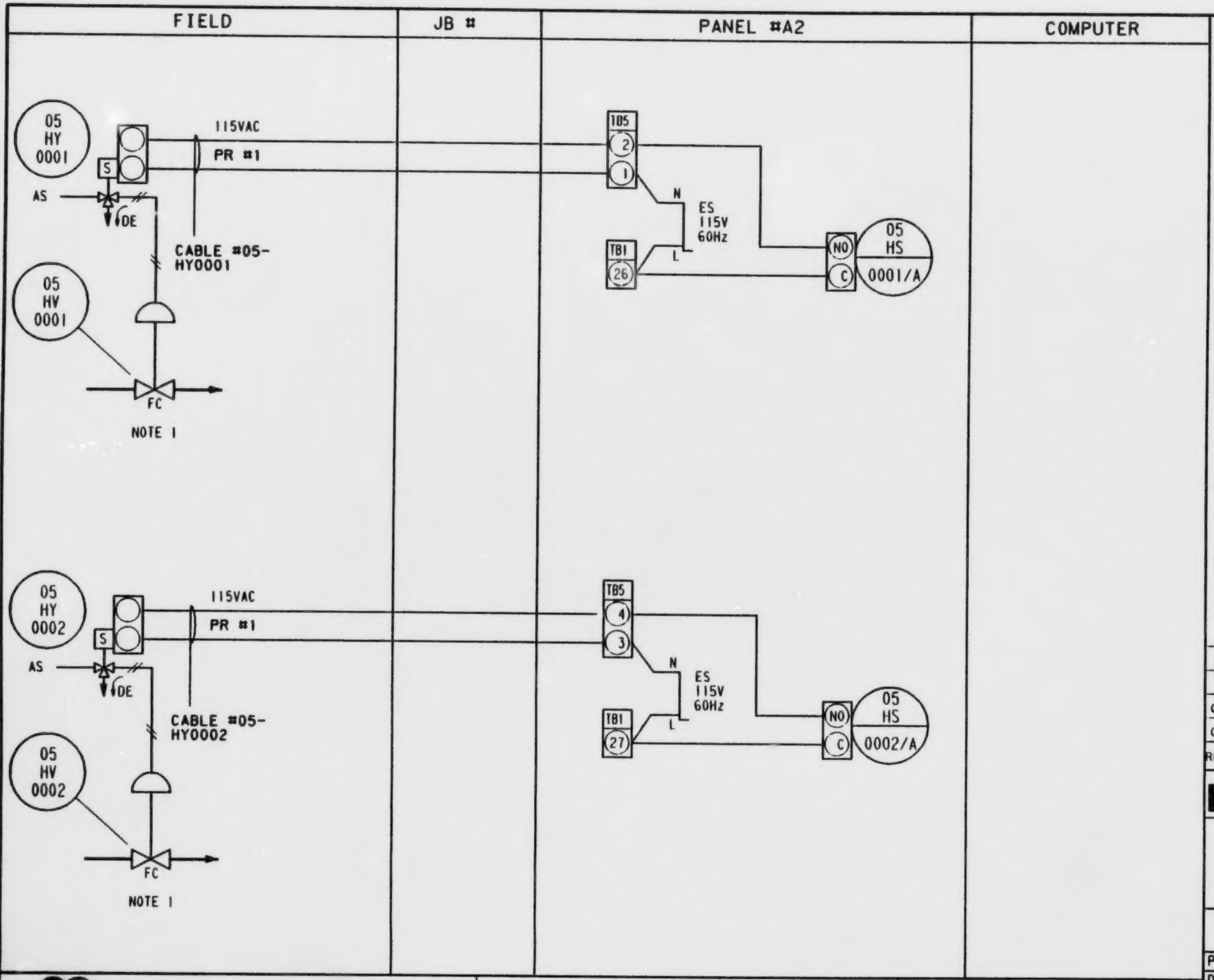

NOTES:

1. HAND STATION OPENS OR CLOSES VALVE. SWITCH POSITION VIEWED FROM PANEL FRONT:

   CLOSE OPEN CLOSE OPEN

   LINE LINE

2. HAND STATION OPENS OR CLOSES VALVE. SWITCH POSITION VIEWED FROM PANEL FRONT:

   OPEN CLOSE OPEN CLOSE

   LINE LINE

GENERAL NOTES:

A. 24 VAC Power Supply from GFC, Hammond Series Power Supply in panel.

B. 4-20mA signals to computer are shunted by EMR with a resistor to provide voltage signal to computer card.

C. Compatibility of voltage signals to computer programmed by EMR.

REV	DATE	DESCRIPTION	CHK	MEC APP	EMR APP
01	86-09	PH. 1 FINAL	CP	RAJ	
00	07 86.15	FOR EMR APPROVAL	RW		✓

Energy, Mines and Resources Canada / Énergie, Mines et Ressources Canada

LOOP DIAGRAM
05-H-0001/0002
AREA 5
LIGHT OIL SYSTEM

EMR COPROCESSING PILOT PLANT PP3

PID No.	D-3-5 -MP-1		
DRAWN	CAD	DATE	86.05.15
CHKD			REV
DESIGN			01

LOOP13

Monenco Consultants Limited | WORK ORDER No. DSS 8279-3 | REG. No. 204051

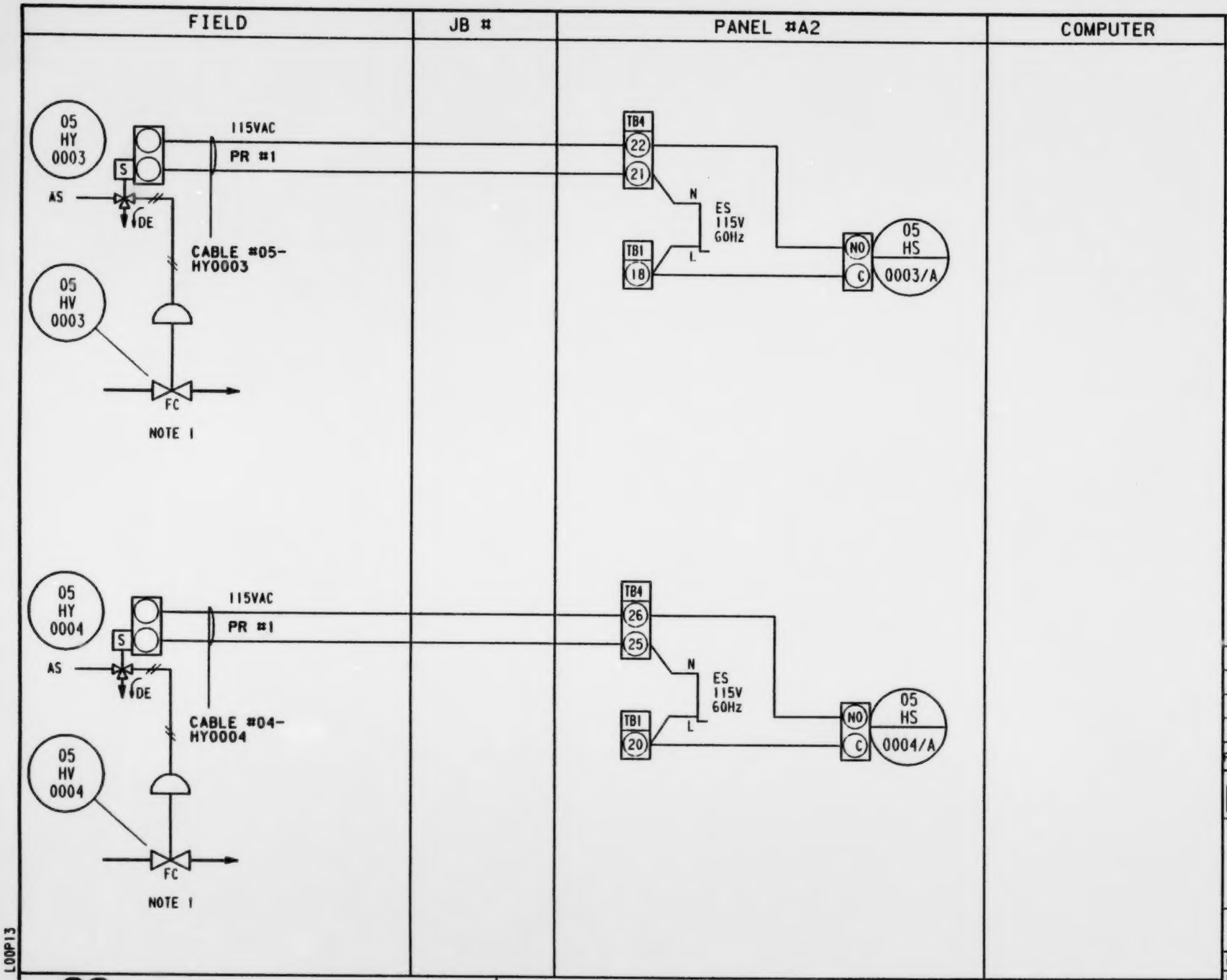

NOTES:

1. HAND STATION OPENS OR CLOSES VALVE. SWITCH POSITION VIEWED FROM PANEL FRONT:

   CLOSE OPEN CLOSE OPEN

   LINE LINE

2. HAND STATION OPENS OR CLOSES VALVE. SWITCH POSITION VIEWED FROM PANEL FRONT:

   OPEN CLOSE OPEN CLOSE

   LINE LINE

GENERAL NOTES:

A. 24 VAC Power Supply from GFC, Hammond Series Power Supply in panel.

B. 4-20mA signals to computer are shunted by EMR with a resistor to provide voltage signal to computer card.

C. Compatibility of voltage signals to computer programmed by EMR.

REV	DATE	DESCRIPTION	CHK	MEC APP	EMR APP
01	86-09	PH.1 FINAL	CP	RAJ	
00	86.07.15	FOR EMR APPROVAL	RW		✓

Energy, Mines and Resources Canada — Énergie, Mines et Ressources Canada

LOOP DIAGRAM
05-H-0003/0004
AREA 5
LIGHT OIL SYSTEM

EMR COPROCESSING PILOT PLANT
PP3

PID No.		D-3-5 -MP-1	
DRAWN	CAD	DATE	86.05.15
CHKD			REV
DESIGN			01

Monenco Consultants Limited

WORK ORDER No. DSS 8279-3

REG. No. 204052

LOOP13

B

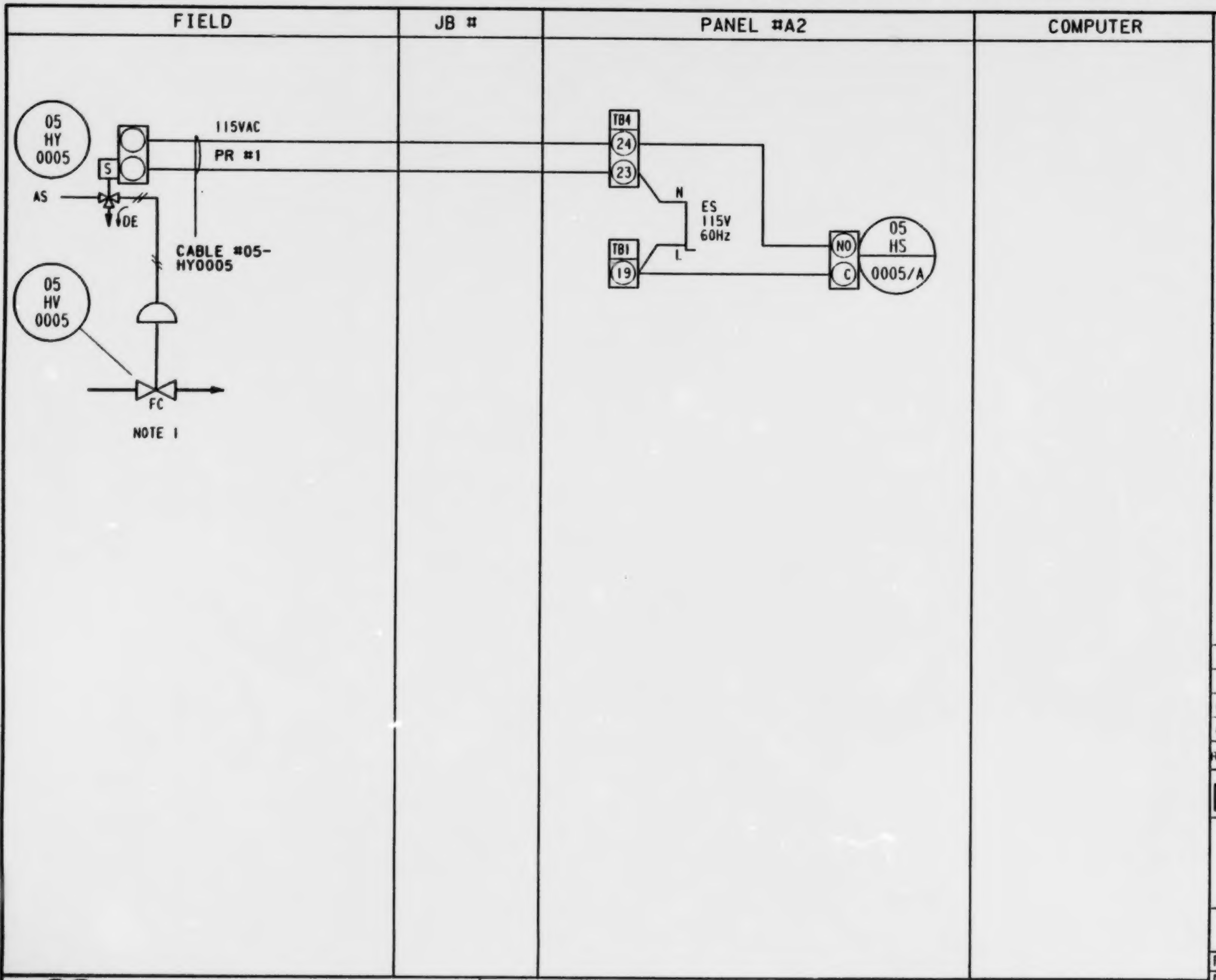

NOTES:

1. HAND STATION OPENS OR CLOSES VALVE. SWITCH POSITION VIEWED FROM PANEL FRONT:

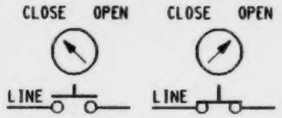

2. HAND STATION OPENS OR CLOSES VALVE. SWITCH POSITION VIEWED FROM PANEL FRONT:

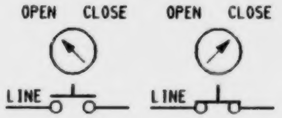

GENERAL NOTES:

A. 24 VAC Power Supply from GFC, Hammond Series Power Supply in panel.

B. 4-20mA signals to computer are shunted by EMR with a resistor to provide voltage signal to computer card.

C. Compatibility of voltage signals to computer programmed by EMR.

REV	DATE	DESCRIPTION	CHK	MEC APP	EMR APP
01	86-09	PH.1 FINAL	CP	RAW	
00	07 86.15	FOR EMR APPROVAL	RW		✓

Energy, Mines and Resources Canada / Énergie, Mines et Ressources Canada

LOOP DIAGRAM
05-H-0005
AREA 5
LIGHT OIL SYSTEM

EMR COPROCESSING PILOT PLANT
PP3

PID No.		D-3-5 -MP-1	
DRAWN	CAD	DATE	86.05.15
CHKD			REV
DESIGN			01

Monenco Consultants Limited

WORK ORDER No. DSS 8279-3

REG. No. 204053

LOOP13

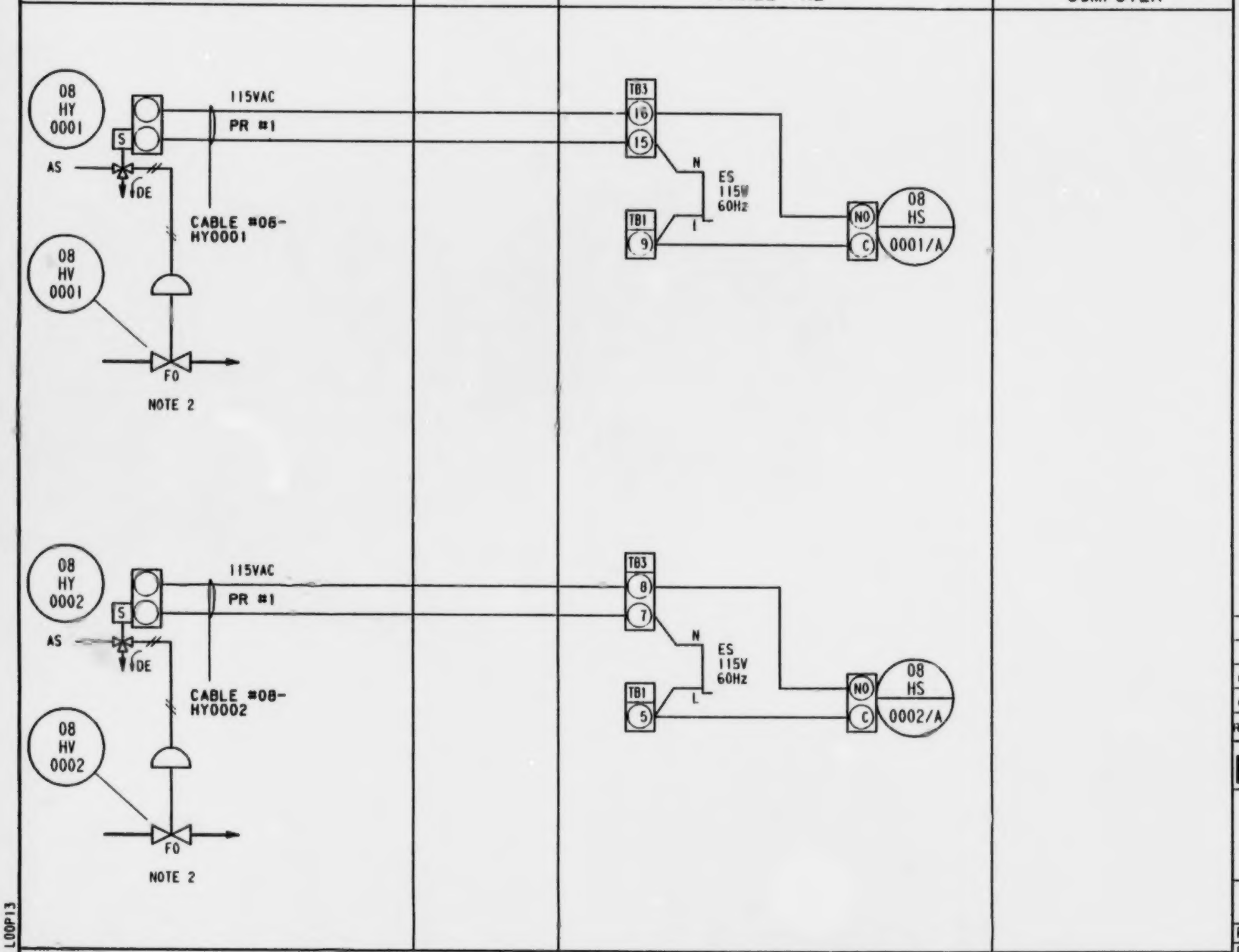

NOTES:

1. HAND STATION OPENS OR CLOSES VALVE. SWITCH POSITION VIEWED FROM PANEL FRONT:

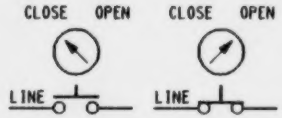

2. HAND STATION OPENS OR CLOSES VALVE. SWITCH POSITION VIEWED FROM PANEL FRONT:

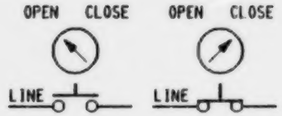

GENERAL NOTES:

A. 24 VAC Power Supply from GFC, Hammond Series Power Supply in panel.

B. 4-20mA signals to computer are shunted by EMR with a resistor to provide voltage signal to computer card.

C. Compatibility of voltage signals to computer programmed by EMR.

REV	DATE	DESCRIPTION	CHK	MEC APP	EMR APP
01	86-09	PH.1 FINAL	CP	RAJ	
00	86.07.15	FOR EMR APPROVAL	RW		✓

Energy, Mines and Resources Canada / Énergie, Mines et Ressources Canada

LOOP DIAGRAM
08-H-0001/0002
AREA 8
RECYCLE GAS SYSTEM

EMR COPROCESSING PILOT PLANT
PP3

PID No.	D-3-8 -MP-1
DRAWN CAD	DATE 86.05.15
CHKD	REV
DESIGN	01

Monenco Consultants Limited | WORK ORDER No. DSS 8279-3 | REG. No. 204054

LOOP13

B

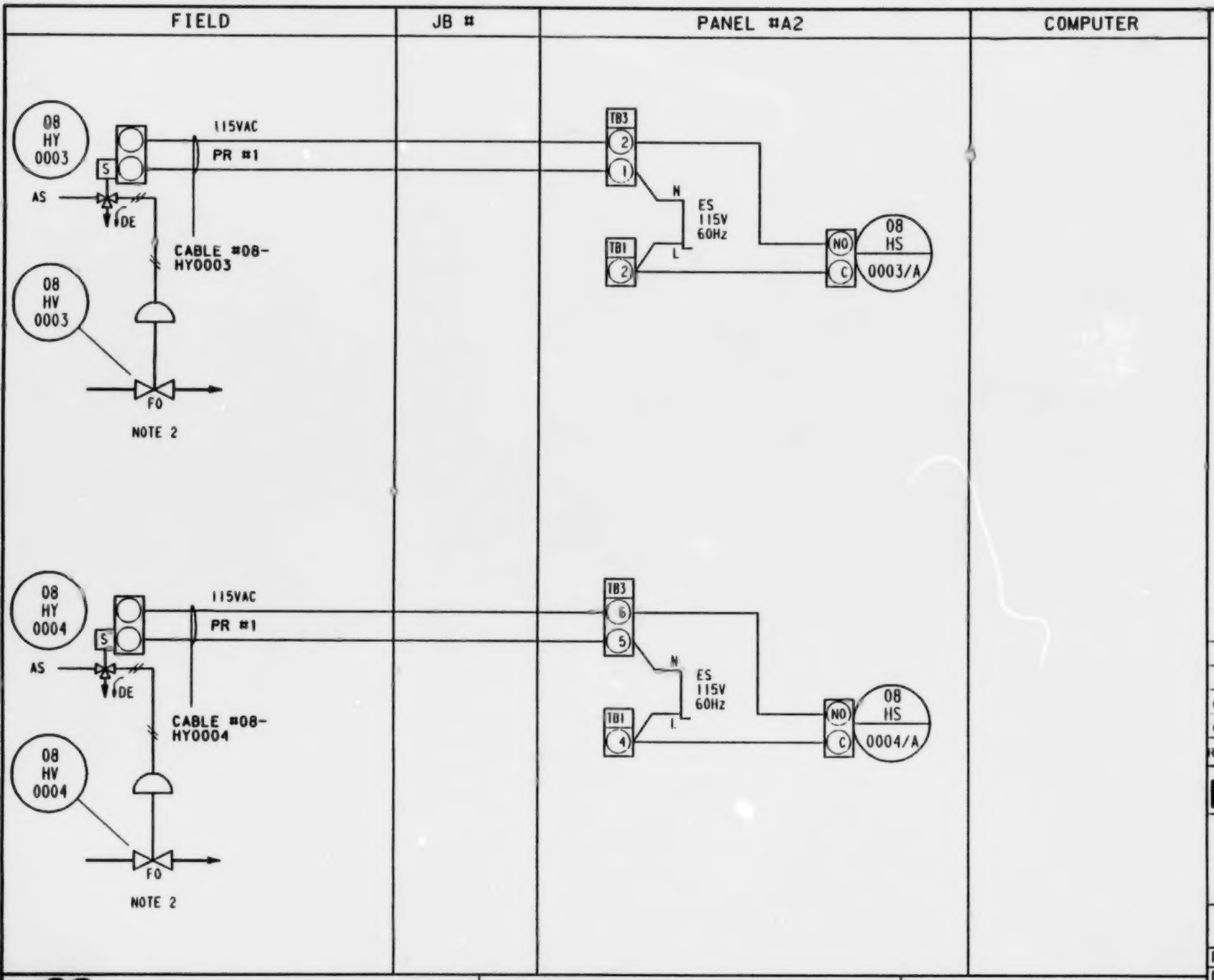

NOTES:

1. HAND STATION OPENS OR CLOSES VALVE. SWITCH POSITION VIEWED FROM PANEL FRONT:

   CLOSE OPEN — CLOSE OPEN — LINE — LINE

2. HAND STATION OPENS OR CLOSES VALVE. SWITCH POSITION VIEWED FROM PANEL FRONT:

   OPEN CLOSE — OPEN CLOSE — LINE — LINE

GENERAL NOTES:

A. 24 VAC Power Supply from GFC, Hammond Series Power Supply in panel.

B. 4-20mA signals to computer are shunted by EMR with a resistor to provide voltage signal to computer card.

C. Compatibility of voltage signals to computer programmed by EMR.

REV	DATE	DESCRIPTION	CHK	MEC APP	EMR APP
01	86-09-07	PH. 1 FINAL	CP	RW	
00	86.15	FOR EMR APPROVAL	RW		✓

Energy, Mines and Resources Canada — Énergie, Mines et Ressources Canada

LOOP DIAGRAM
08-H-0003/0004
AREA 8
RECYCLE GAS SYSTEM

EMR COPROCESSING PILOT PLANT PP3

PID No.	D-3-8 -MP-1		
DRAWN	CAD	DATE	86.05.15
CHKD		REV	01
DESIGN			

Monenco Consultants Limited — WORK ORDER No. DSS 8279-3 — REG. No. 204055

LOOP13

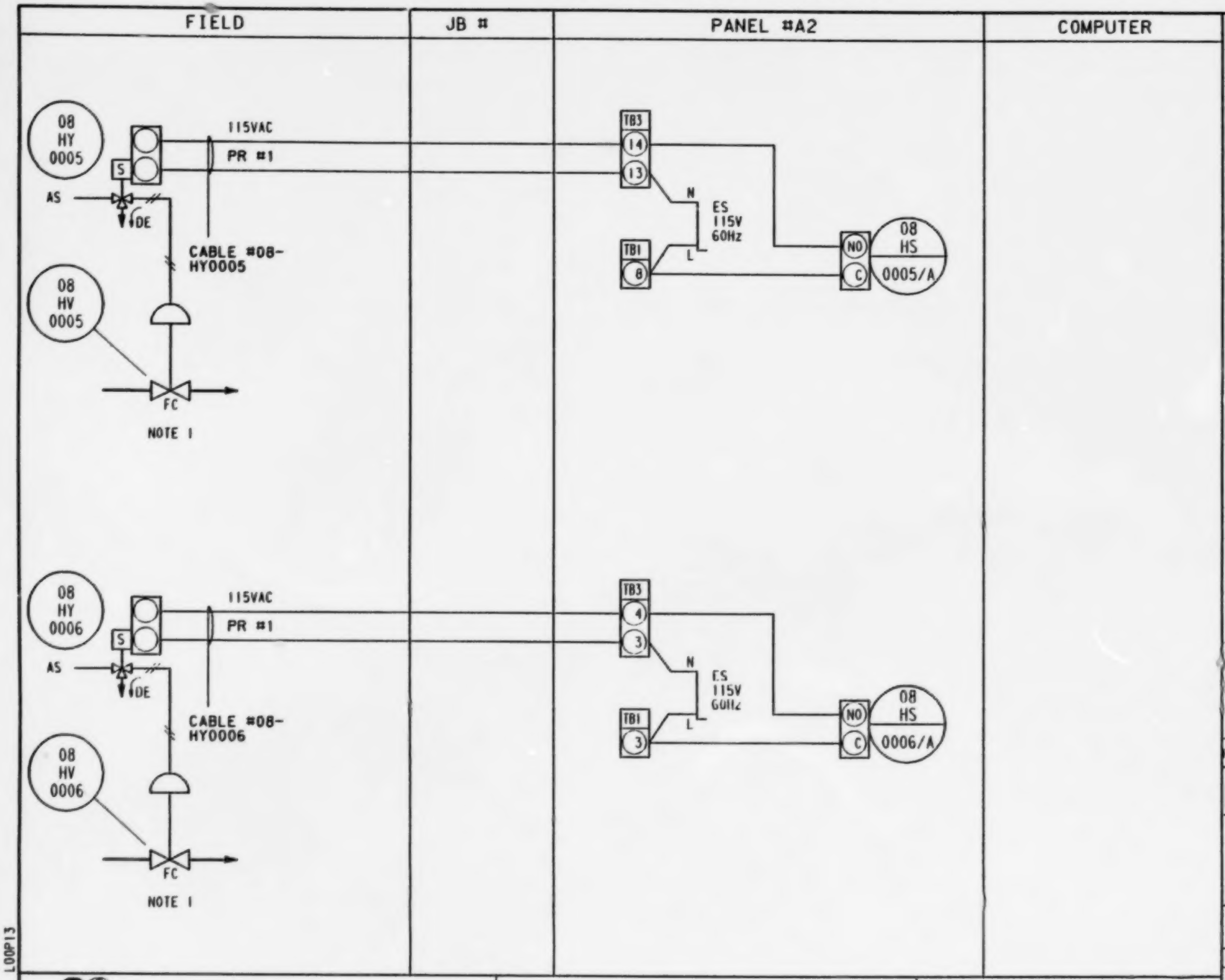

NOTES:

1. HAND STATION OPENS OR CLOSES VALVE. SWITCH POSITION VIEWED FROM PANEL FRONT:

   CLOSE OPEN CLOSE OPEN

   LINE LINE

2. HAND STATION OPENS OR CLOSES VALVE. SWITCH POSITION VIEWED FROM PANEL FRONT:

   OPEN CLOSE OPEN CLOSE

   LINE LINE

GENERAL NOTES:

A. 24 VAC Power Supply from GFC, Hammond Series Power Supply in panel.

B. 4-20mA signals to computer are shunted by EMR with a resistor to provide voltage signal to computer card.

C. Compatibility of voltage signals to computer programmed by EMR.

REV	DATE	DESCRIPTION	CHK	MEC APP	EMR APP
01	86-09-07	PH.1 FINAL	CP	CAJ	
00	86.15	FOR EMR APPROVAL	RW		✓

Energy, Mines and Resources Canada — Énergie, Mines et Ressources Canada

LOOP DIAGRAM
08-H-0005/0006
AREA 8
RECYCLE GAS SYSTEM

EMR COPROCESSING PILOT PLANT
PP3

PID No.	D-3-8 -MP-1		
DRAWN	CAD	DATE	86.05.15
CHKD		REV	01
DESIGN			

LOOP13

B

Monenco Consultants Limited

WORK ORDER No. DSS 8279-3

REG. No. 204056

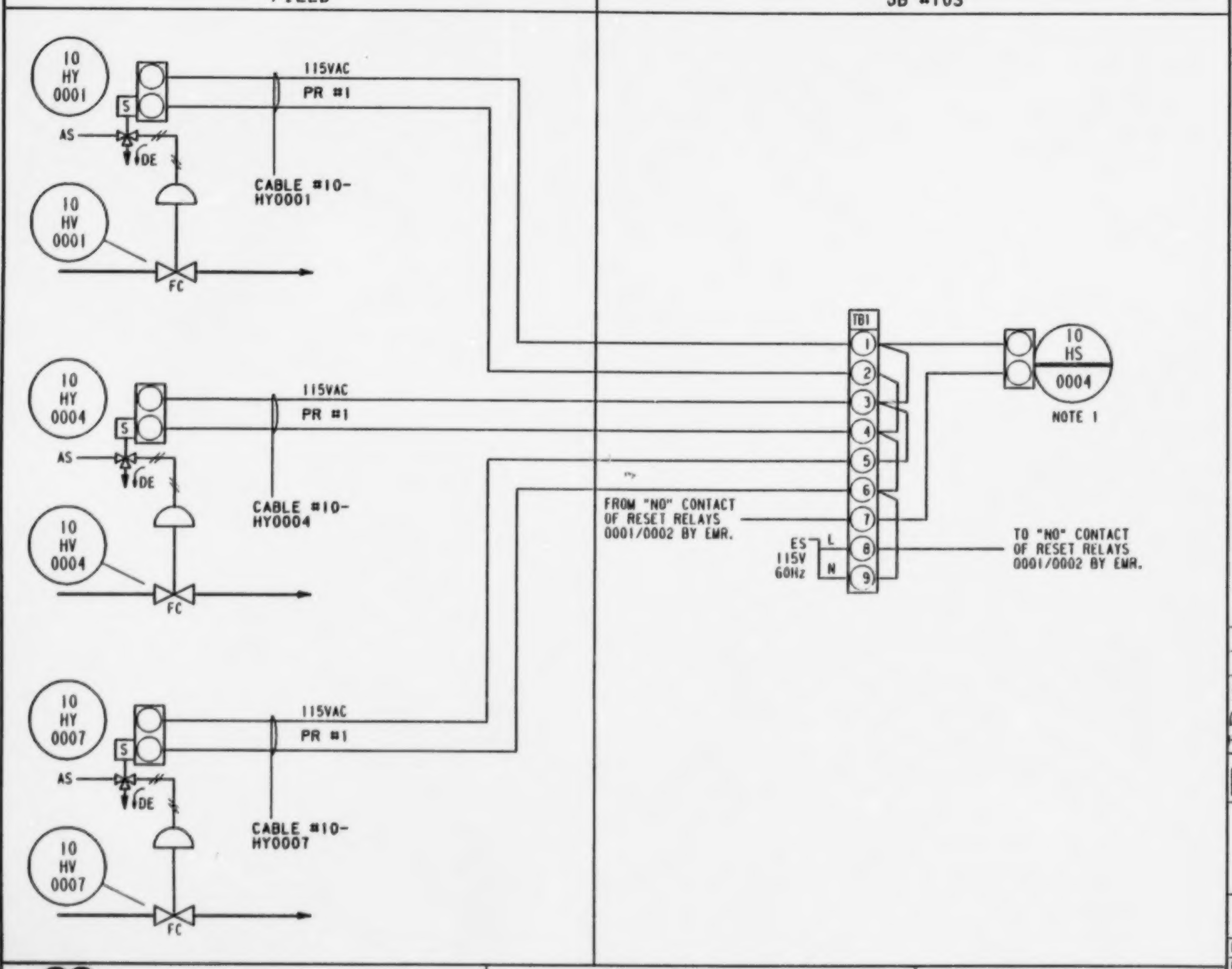

NOTES:
1. SPRING RETURN SEAL-IN CONTACT.

GENERAL NOTES:

A. 24 VAC Power Supply from GFC, Hammond Series Power Supply in panel.

B. 4-20mA signals to computer are shunted by EMR with a resistor to provide voltage signal to computer card.

C. Compatibility of voltage signals to computer programmed by EMR.

REV	DATE	DESCRIPTION	CHK	MEC APP	EMR APP
01	86.09	PH.4 FINAL			
00	86.07.21	FOR EMR APPROVAL			✓

Energy, Mines and Resources Canada — Énergie, Mines et Ressources Canada

LOOP DIAGRAM
10-H-0004
AREA 10
HYDROGEN SUPPLY SYSTEM

EMR COPROCESSING PILOT PLANT
PP3

PID No.	D-3-10-MP-1		
DRAWN	CAD	DATE	86.07.15
CHKD		REV	01
DESIGN			

Monenco Consultants Limited

WORK ORDER No. DSS 8279-3

REG. No. 204075

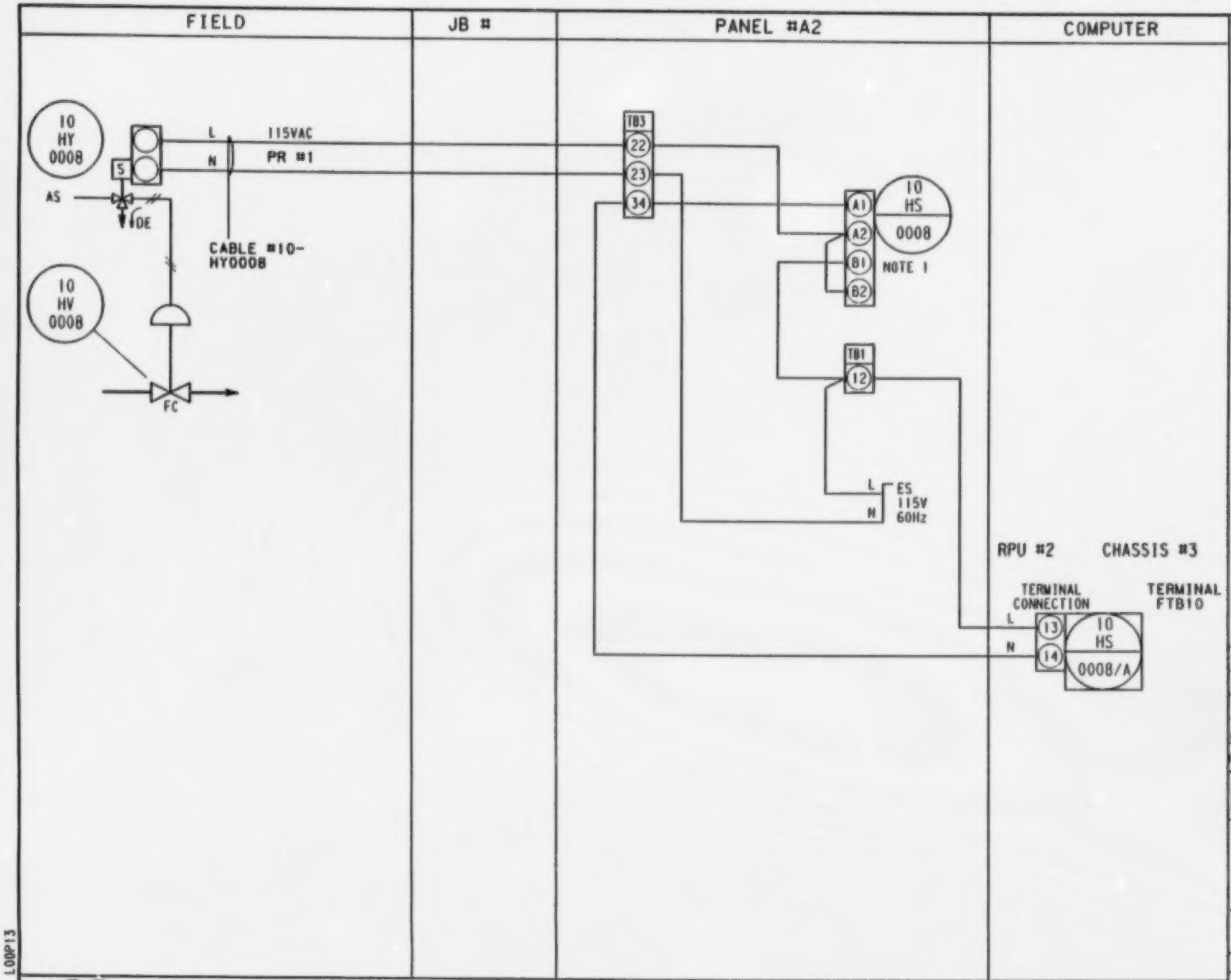

NOTES:
1. SWITCH POSITION VIEWED FROM PANEL FRONT.

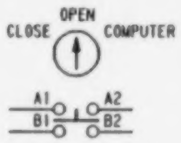

CONTACTS	CLOSE	OPEN	COMPUTER
A	0	0	X
B	0	X	0

GENERAL NOTES:

A. 24 VAC Power Supply from GFC, Hammond Series Power Supply in panel.

B. 4-20mA signals to computer are shunted by EMR with a resistor to provide voltage signal to computer card.

C. Compatibility of voltage signals to computer programmed by EMR.

REV	DATE	DESCRIPTION	CHK	MEC APP	EMR APP
01	86.09	PH.1 FINAL	LP	RAJ	
00	86.07.21	FOR EMR APPROVAL	RAJ		✓

Energy, Mines and Resources Canada / Énergie, Mines et Ressources Canada

LOOP DIAGRAM
10-H-0008
AREA 10
HYDROGEN SUPPLY SYSTEM

EMR COPROCESSING PILOT PLANT
PP3

PID No. D-3-10-MP-1
DRAWN CAD DATE 86.07.15
CHKD
DESIGN
REV 01

LOOP13

B

Monenco Consultants Limited

WORK ORDER No. DSS 8279-3

REG. No. 204071

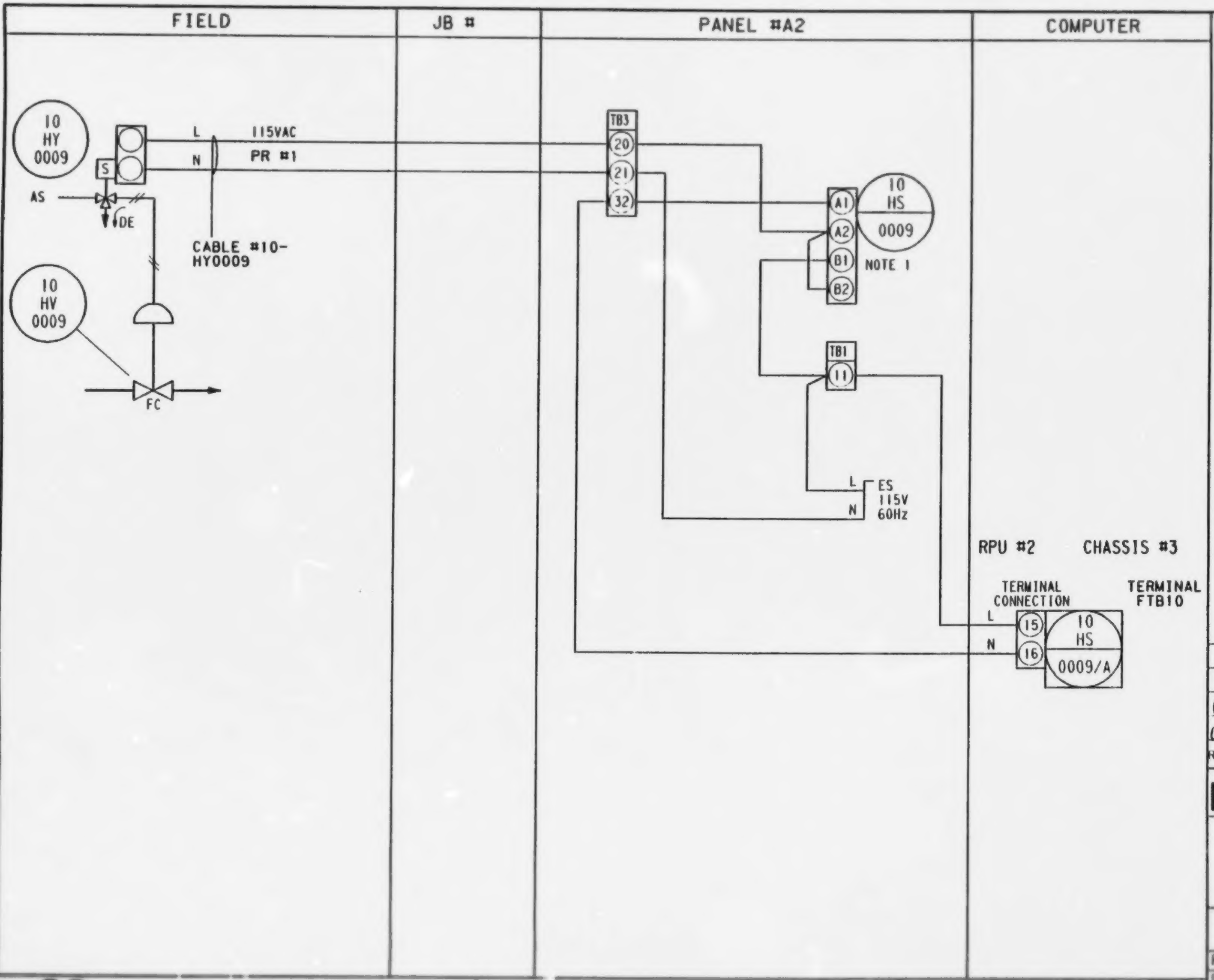

NOTES:
1. SWITCH POSITION VIEWED FROM PANEL FRONT.

CONTACTS	CLOSE	OPEN	COMPUTER
A	0	0	X
B	0	X	0

GENERAL NOTES:

A. 24 VAC Power Supply from GFC, Hammond Series Power Supply in panel.

B. 4-20mA signals to computer are shunted by EMR with a resistor to provide voltage signal to computer card.

C. Compatibility of voltage signals to computer programmed by EMR.

REV	DATE	DESCRIPTION	CHK	MEC APP	EMR APP
01	86.09	P.1.1 FINAL		RW	
00	86.07.21	FOR EMR APPROVAL	RW		✓

Energy, Mines and Resources Canada / Énergie, Mines et Ressources Canada

LOOP DIAGRAM
10-H-0009
AREA 10
HYDROGEN SUPPLY SYSTEM

EMR COPROCESSING PILOT PLANT
PP3

PID No. D-3-10-MP-1
DRAWN CAD DATE 86.07.15
CHKD REV
DESIGN 01

Monenco Consultants Limited | WORK ORDER No. DSS 8279-3 | REG. No. 204072

LOOP13

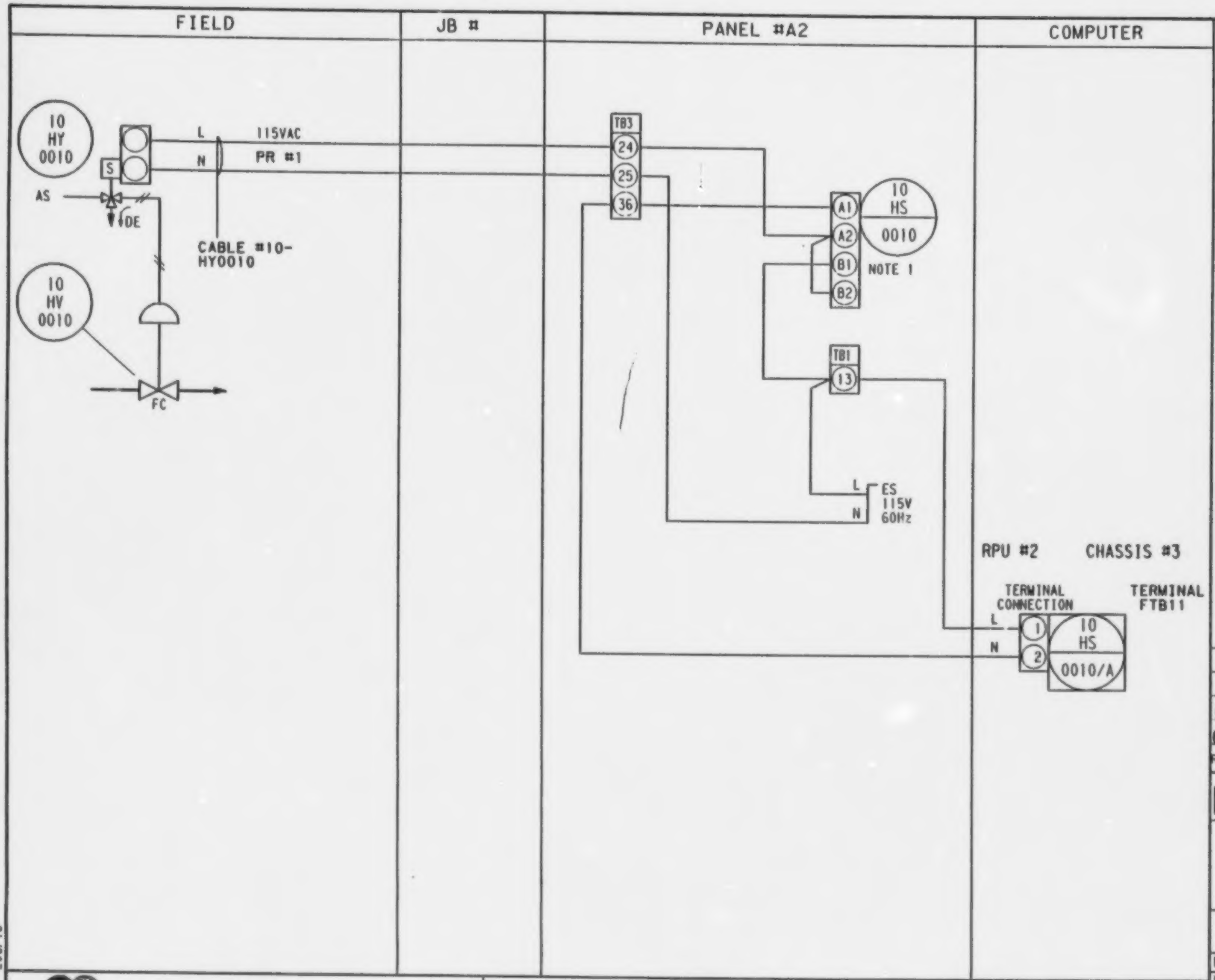

NOTES:

1. SWITCH POSITION VIEWED FROM PANEL FRONT.

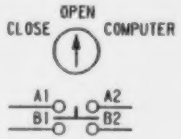

CONTACTS	CLOSE	OPEN	COMPUTER
A	0	0	X
B	0	X	0

GENERAL NOTES:

A. 24 VAC Power Supply from GFC, Hammond Series Power Supply in panel.

B. 4-20mA signals to computer are shunted by EMR with a resistor to provide voltage signal to computer card.

C. Compatibility of voltage signals to computer programmed by EMR.

REV	DATE	DESCRIPTION	CHK	MEC APP	EMR APP
01	86.09	PH.1 FINAL		RAW	
00	86.07.21	FOR EMR APPROVAL	RAW		✓

Energy, Mines and Resources Canada — Énergie, Mines et Ressources Canada

LOOP DIAGRAM
10-H-0010
AREA 10
HYDROGEN SUPPLY SYSTEM

EMR COPROCESSING PILOT PLANT
PP3

PID No. D-3-10-MP-1
DRAWN CAD DATE 86.07.15
CHKD
DESIGN
REV 01

LOOP13

Monenco Consultants Limited

WORK ORDER No. DSS 8279-3

REG. No. 204073

B

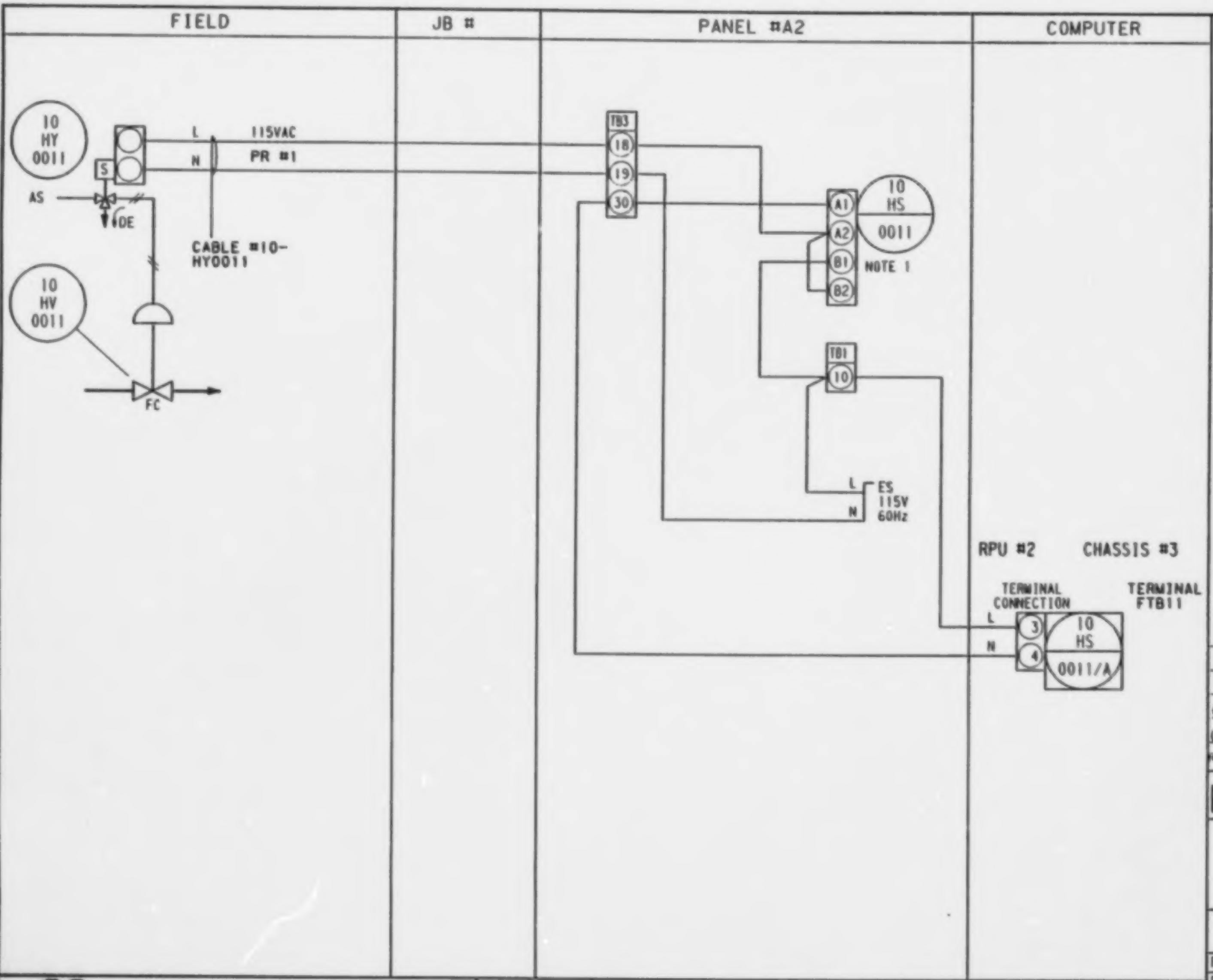

NOTES:

1. SWITCH POSITION VIEWED FROM PANEL FRONT.

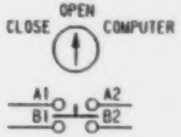

CONTACTS	CLOSE	OPEN	COMPUTER
A	O	O	X
B	O	X	O

GENERAL NOTES:

A. 24 VAC Power Supply from GFC, Hammond Series Power Supply in panel.

B. 4-20mA signals to computer are shunted by EMR with a resistor to provide voltage signal to computer card.

C. Compatibility of voltage signals to computer programmed by EMR.

REV	DATE	DESCRIPTION	CHK	MEC APP	EMR APP
01	86.09	PH.1 FINAL	CP	RAJ	
00	86.07.21	FOR EMR APPROVAL			✓

Energy, Mines and Resources Canada / Énergie, Mines et Ressources Canada

LOOP DIAGRAM
10-H-0011
AREA 10
HYDROGEN SUPPLY SYSTEM

EMR COPROCESSING PILOT PLANT
PP3

PID No. D-3-10-MP-1
DRAWN CAD DATE 86.07.15
CHKD
DESIGN
REV 01

Monenco Consultants Limited

WORK ORDER No. DSS 8279-3

REG. No. 204074

LOOP13

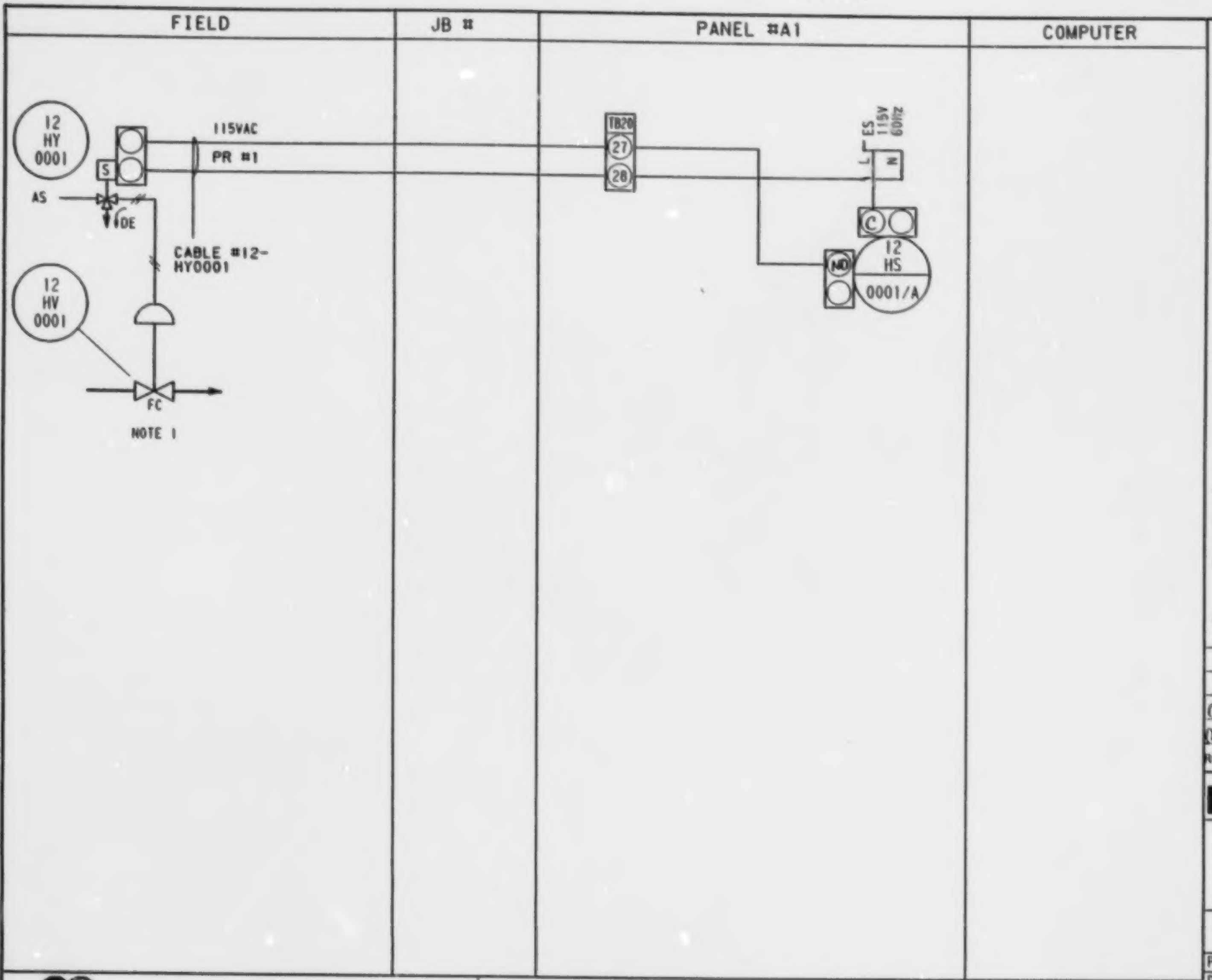

NOTES:

1. HAND STATION OPENS OR CLOSES VALVE. SWITCH POSITION VIEWED FROM PANEL FRONT:

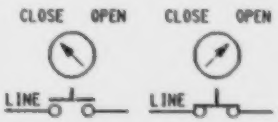

2. HAND STATION OPENS OR CLOSES VALVE. SWITCH POSITION VIEWED FROM PANEL FRONT:

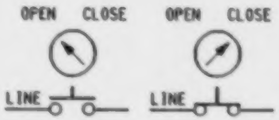

GENERAL NOTES:

A. 24 VAC Power Supply from GFC, Hammond Series Power Supply in panel.

B. 4-20mA signals to computer are shunted by EMR with a resistor to provide voltage signal to computer card.

C. Compatibility of voltage signals to computer programmed by EMR.

REV	DATE	DESCRIPTION	CHK	MEC APP	EMR APP
01	86.09	PH.1 FINAL	CP	BAJ	
00	86.01.16	FOR EMR APPROVAL	[illegible]		✓

Energy, Mines and Resources Canada — Énergie, Mines et Ressources Canada

LOOP DIAGRAM
12-H-0001
AREA 12
HYDROGEN PURGE SYSTEM

EMR COPROCESSING PILOT PLANT
PP3

PID No. D-3-12-MP-1

DRAWN | CAD | DATE

CHKD

DESIGN

REV 01

Monenco Consultants Limited

WORK ORDER No. DSS 8279-3

REG. No. 204076

LOOP13

B

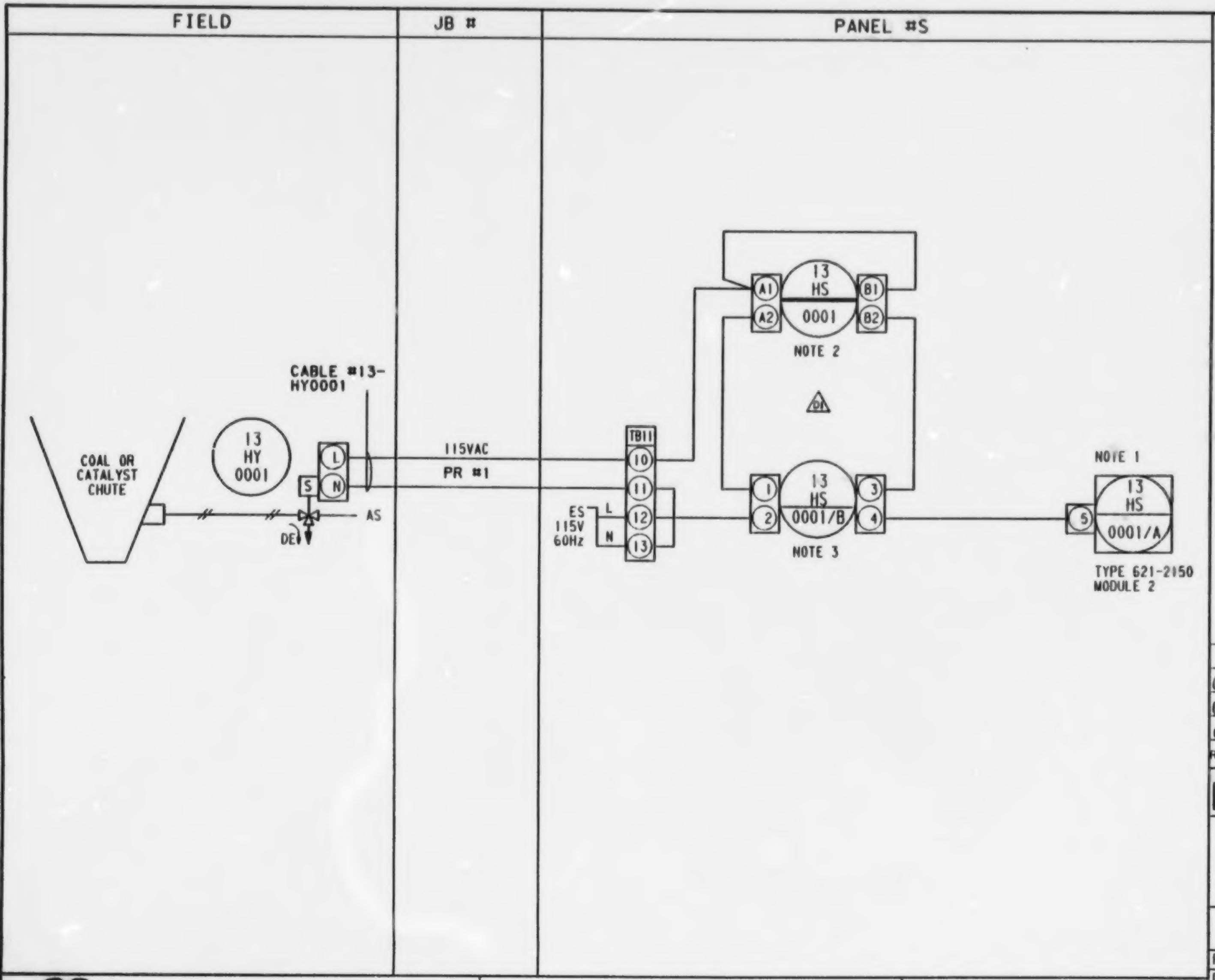

NOTES:
1. HONEYWELL PLC CONTACTS.
2. ON/OFF/COMPUTER HAND SELECTOR POSITIONS:

OFF ON COMPUTER

A1 A2 B1 B2

CONTACTS	OFF	ON	COMPUTER
A		X	
B			X

3. ON/OFF SWITCH TO ISOLATE MAIN SWITCH FOR MAINTENANCE. TO BE MOUNTED INSIDE PANEL NEAR MAIN SWITCH.

CONTACTS	ON	OFF
1 2	X	
3 4	X	

GENERAL NOTES:

A. 24 VAC Power Supply from GFC, Hammond Series Power Supply in panel.

B. 4-20mA signals to computer are shunted by EMR with a resistor to provide voltage signal to computer card.

C. Compatibility of voltage signals to computer programmed by EMR.

REV	DATE	DESCRIPTION	CHK	MEC APP	EMR APP
02	86.09	PH.1 FINAL	CP	RPW	
01	86.08.21	INST. SYMBOL REVISED	CP		
00	86.07.25	FOR EMR APPROVAL	RPW		✓

Energy, Mines and Resources Canada / Énergie, Mines et Ressources Canada

LOOP DIAGRAM
13-H-0001
AREA 13
SLURRY FEED SYSTEM

EMR COPROCESSING PILOT PLANT
PP3

PID No.	D-3-13-MP-1		
DRAWN	CAD	DATE	86.05.15
CHKD			REV
DESIGN			02

Monenco Consultants Limited

WORK ORDER No. DSS 8279-3

REG. No. 204172

LOOP

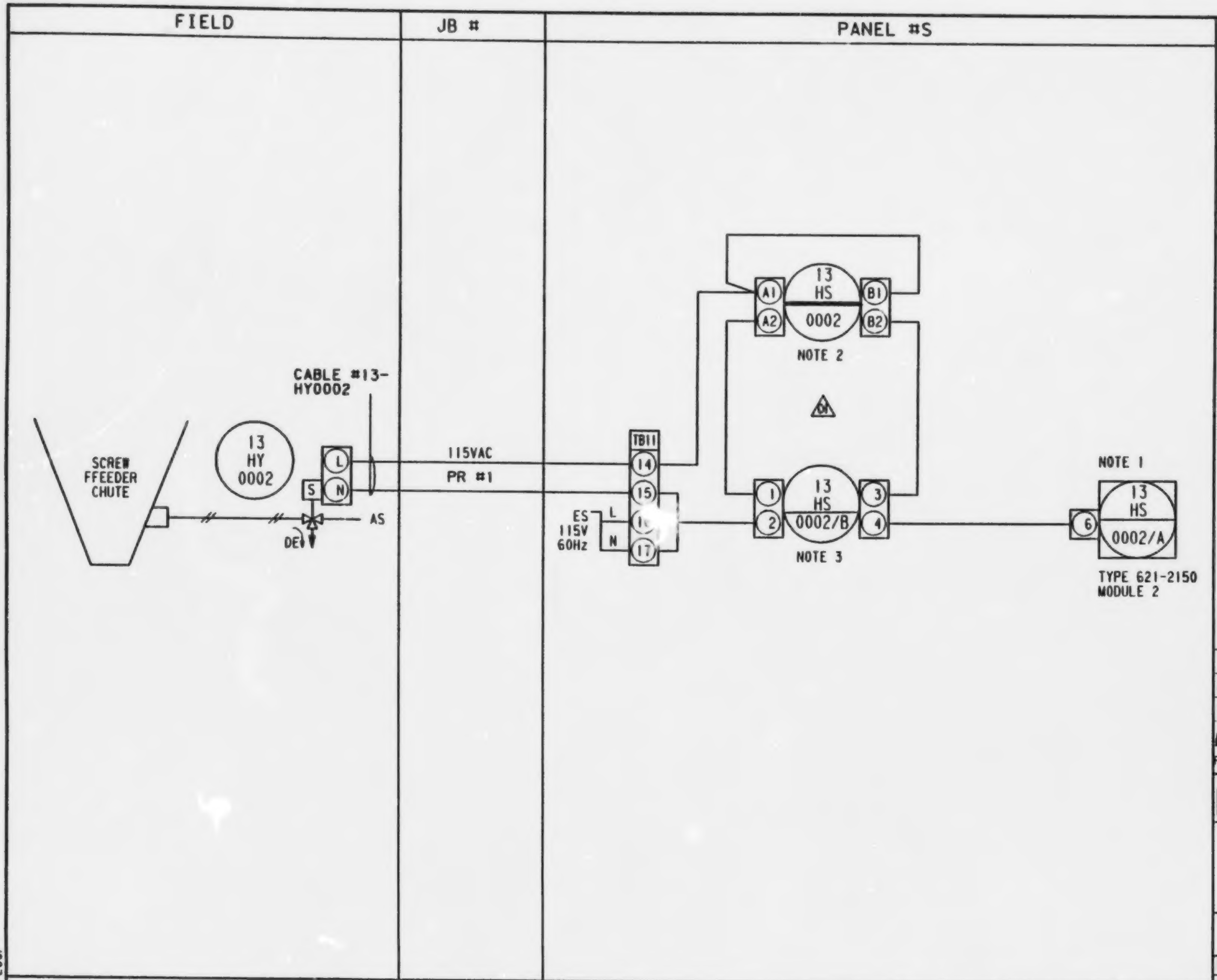

NOTES:

1. HONEYWELL PLC CONTACTS.
2. ON/OFF/COMPUTER HAND SELECTOR POSITIONS:

OFF ON COMPUTER

A1 A2 B1 B2

CONTACTS	OFF	ON	COMPUTER
A		X	
B			X

3. ON/OFF SWITCH TO ISOLATE MAIN SWITCH FOR MAINTENANCE. TO BE MOUNTED INSIDE PANEL NEAR MAIN SWITCH.

CONTACTS	ON	OFF
1 2	X	
3 4	X	

GENERAL NOTES:

A. 24 VAC Power Supply from GFC, Hammond Series Power Supply in panel.

B. 4-20mA signals to computer are shunted by EMR with a resistor to provide voltage signal to computer card.

C. Compatibility of voltage signals to computer programmed by EMR.

REV	DATE	DESCRIPTION	CHK	MEC APP	EMR APP
02	86.09	PH.1 FINAL	CP	RAJ	
01	86.08.21	INST. SYMBOL REVISED	CP		
00	86.07.25	FOR EMR APPROVAL	RAJ		✓

Energy, Mines and Resources Canada / Énergie, Mines et Ressources Canada

LOOP DIAGRAM
13-H-0002
AREA 13
SLURRY FEED SYSTEM

EMR COPROCESSING PILOT PLANT
PP3

PID No.	D-3-13-MP-1		
DRAWN	CAD	DATE	86.05.15
CHKD			REV
DESIGN			02

Monenco Consultants Limited | WORK ORDER No. DSS 8279-3 | REG. No. 204173

LOOP

B

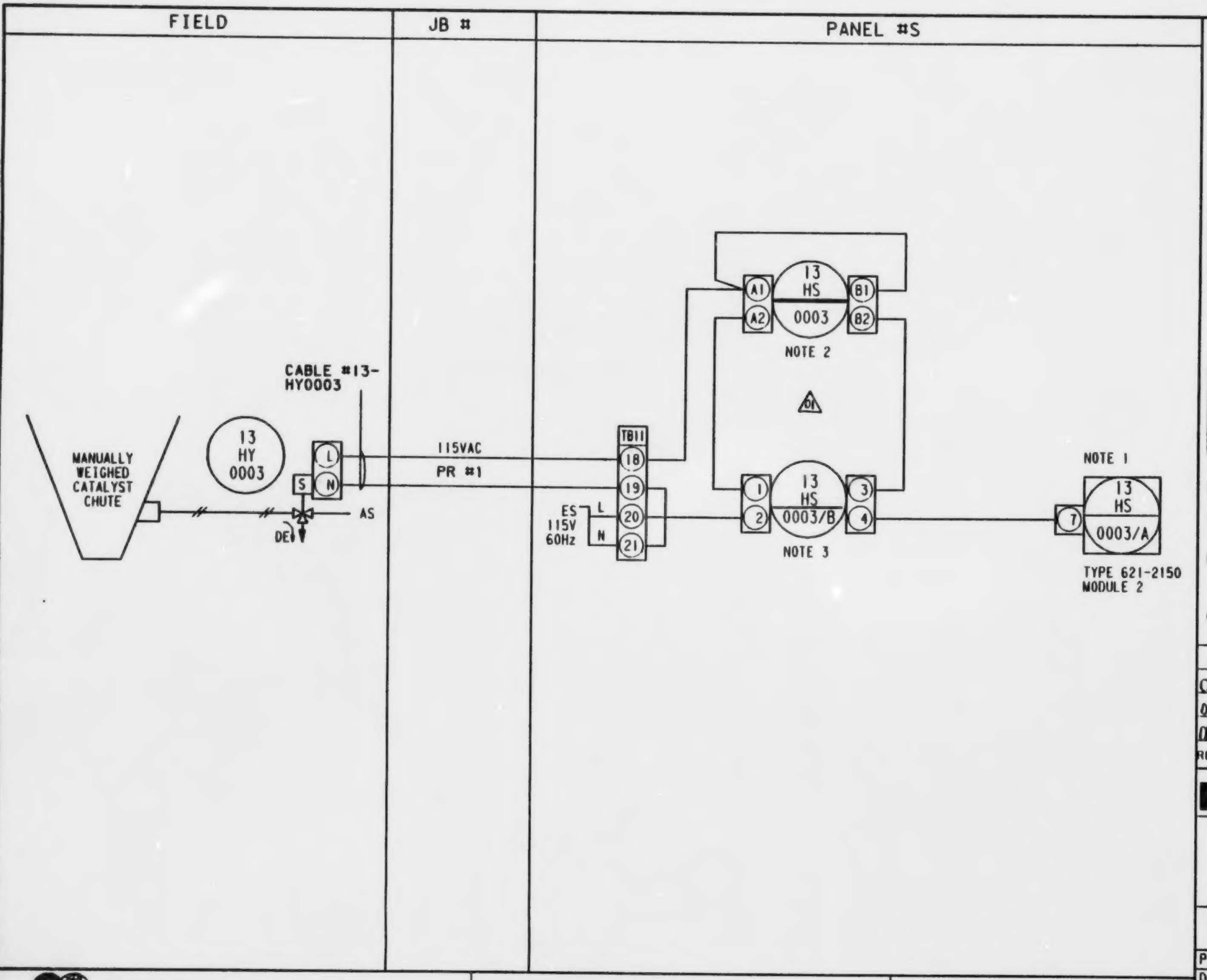

NOTES:

1. HONEYWELL PLC CONTACTS.
2. ON/OFF/COMPUTER HAND SELECTOR POSITIONS:

OFF ON COMPUTER

A1 A2
B1 B2

CONTACTS	OFF	ON	COMPUTER
A		X	
B			X

3. ON/OFF SWITCH TO ISOLATE MAIN SWITCH FOR MAINTENANCE. TO BE MOUNTED INSIDE PANEL NEAR MAIN SWITCH.

CONTACTS	ON	OFF
1 2	X	
3 4	X	

GENERAL NOTES:

A. 24 VAC Power Supply from GFC, Hammond Series Power Supply in panel.

B. 4-20mA signals to computer are shunted by EMR with a resistor to provide voltage signal to computer card.

C. Compatibility of voltage signals to computer programmed by EMR.

REV	DATE	DESCRIPTION	CHK	MEC APP	EMR APP
02	86.09	PH. 1 FINAL	CP	BA	
01	86.08.21	INST. SYMBOL REVISED	CP		
00	86.07.25	FOR EMR APPROVAL	BA		✓

Energy, Mines and Resources Canada — Énergie, Mines et Ressources Canada

LOOP DIAGRAM
13-H-0003
AREA 13
SLURRY FEED SYSTEM

EMR COPROCESSING PILOT PLANT PP3

PID No.	D-3-13-MP-1		
DRAWN	CAD	DATE	86.05.15
CHKD		REV	02
DESIGN			

Monenco Consultants Limited

WORK ORDER No. DSS 8279-3

REG. No. 204174

LOOP

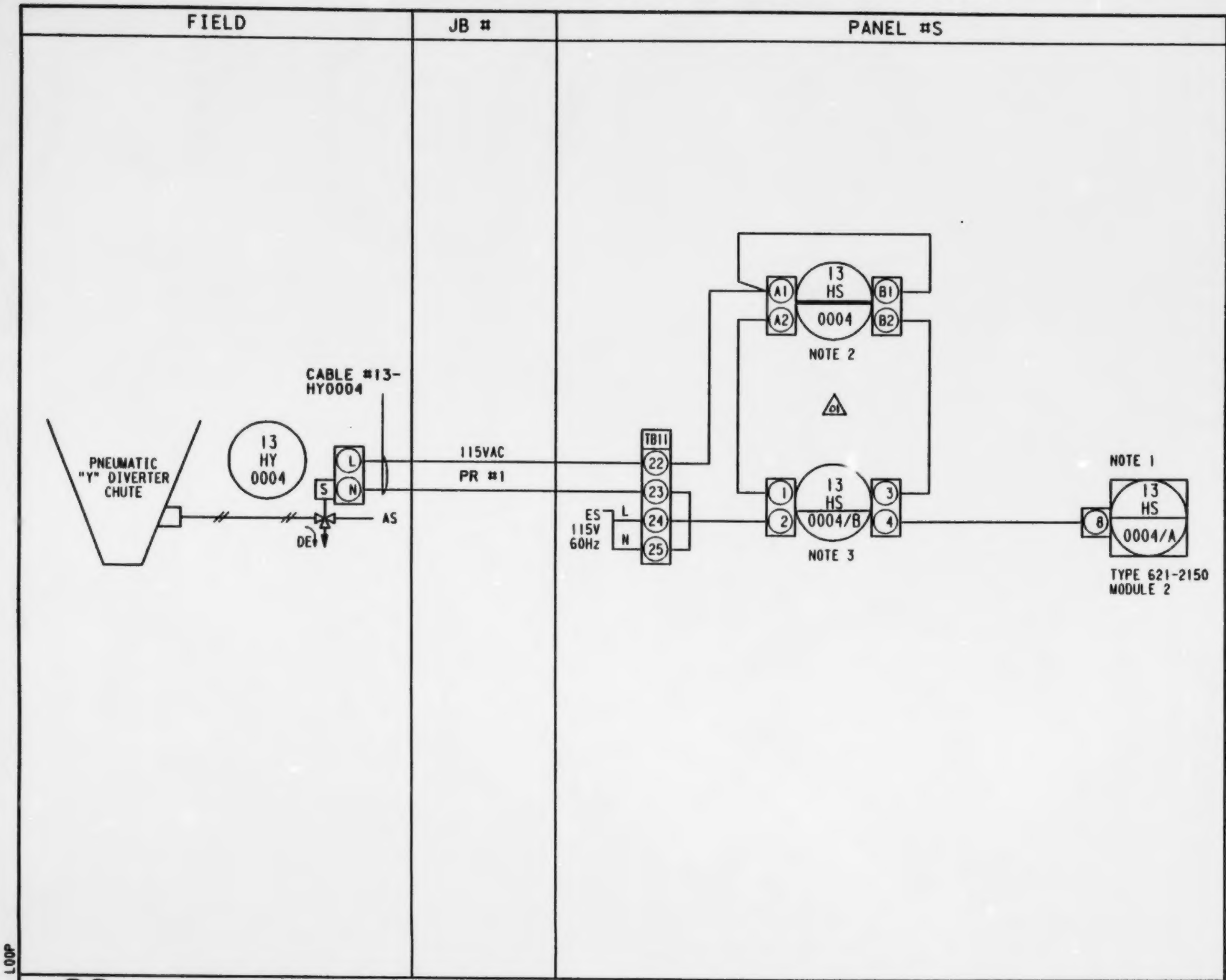

NOTES:

1. HONEYWELL PLC CONTACTS.
2. ON/OFF/COMPUTER HAND SELECTOR POSITIONS:
   OFF ON COMPUTER

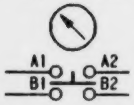

CONTACTS	OFF	ON	COMPUTER
A		X	
B			X

3. ON/OFF SWITCH TO ISOLATE MAIN SWITCH FOR MAINTENANCE. TO BE MOUNTED INSIDE PANEL NEAR MAIN SWITCH.

CONTACTS	ON	OFF
1 2	X	
3 4	X	

GENERAL NOTES:

A. 24 VAC Power Supply from GFC, Hammond Series Power Supply in panel.

B. 4-20mA signals to computer are shunted by EMR with a resistor to provide voltage signal to computer card.

C. Compatibility of voltage signals to computer programmed by EMR.

REV	DATE	DESCRIPTION	CHK	MEC APP	EMR APP
02	86.09	PH. 1 FINAL	CP	RAW	
01	86.08.21	INST. SYMBOL REVISED	CP		
00	86.07.29	FOR EMR APPROVAL	RAW		✓

Energy, Mines and Resources Canada — Énergie, Mines et Ressources Canada

LOOP DIAGRAM
13-H-0004
AREA 13
SLURRY FEED SYSTEM

EMR COPROCESSING PILOT PLANT PP3

PID No.	D-3-13-MP-1		
DRAWN	CAD	DATE	86.05.15
CHKD			REV 02
DESIGN			

LOOP

B

Monenco Consultants Limited

WORK ORDER No. DSS 8279-3

REG. No. 204175

FLOW CONTROLLER LOOPS

LOOP NUMBER	REGISTRATION NUMBER	LOOP NUMBER	REGISTRATION NUMBER	LOOP NUMBER	REGISTRATION NUMBER
01-F-0001	204035				
03-F-0001	204163				
04-F-0001	204162				
05-F-0001	204164				
05-F-0002	204165				
05-F-0003	204166				
08-F-0001	204098				
08-F-0002	204099				
09-F-0002	204156				
09-F-0003	204157				
09-F-0004	204158				
09-F-0005	204159				
09-F-0006	204160				

NOTES:

SHIELDING, GROUNDING, CONDUCTOR IDENTIFICATION:

1. MULTICORE TX WIRE TO HAVE INDIVIDUAL PAIR SHIELDS. ALL OTHER SIGNALS UNSHIELDED.
2. ENSURE SHIELD CONTINUITY FROM SOURCE TO RECEIVER THROUGH INTERMEDIATE TERMINALS.
3. GROUND SHIELD AT INSTRUMENT PANEL ONLY. JUMPER ALL SHIELDS PER LOOP. IF RECEIVER AND SOURCE ARE IN FIELD, GROUND SHIELD AT SOURCE INSTRUMENT.
4. INTERNAL WIRING IN PANELS NOT TO BE SHIELDED.
5. ALL OUTER CASES OF INSTRUMENT CASES TO BE GROUNDED.
6. CONDUCTOR IDENTIFICATION:
   a) SIGNAL WIRE - CABLE NUMBER TO USE TAG No. OF SOURCE INSTRUMENT PLUS SERIAL No.-1, -2, etc.
   b) TX WIRE - USE SIGNAL WIRE DESIGNATION FOR CABLE No. AND PAIR No.

SYMBOLS:

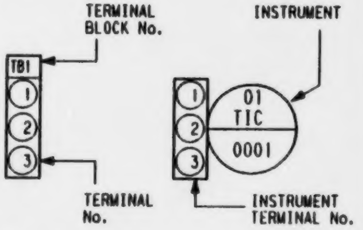

SEE PID, INSTRUMENT SYMBOL SHEET D-3-01-MP-2 FOR INSTRUMENT SYMBOL IDENTIFICATION PER ISA S51.1.

REV	DATE	DESCRIPTION	CHK	MEC APP	EMR APP
01	86.09	PH.1 FINAL			
00	86.07.15	FOR EMR APPROVAL			✓

Energy, Mines and Resources Canada — Énergie, Mines et Ressources Canada

LIST OF FLOW CONTROLLER LOOPS

INSTRUMENT LOOP DIAGRAM COVER SHEET

EMR COPROCESSING PILOT PLANT PP3

DRAWN	CAD	DATE	86.07.03
CHKD			REV
DESIGN			01

Monenco Consultants Limited

WORK ORDER No. DSS 8279-3

REG. No. 204305

LOOP

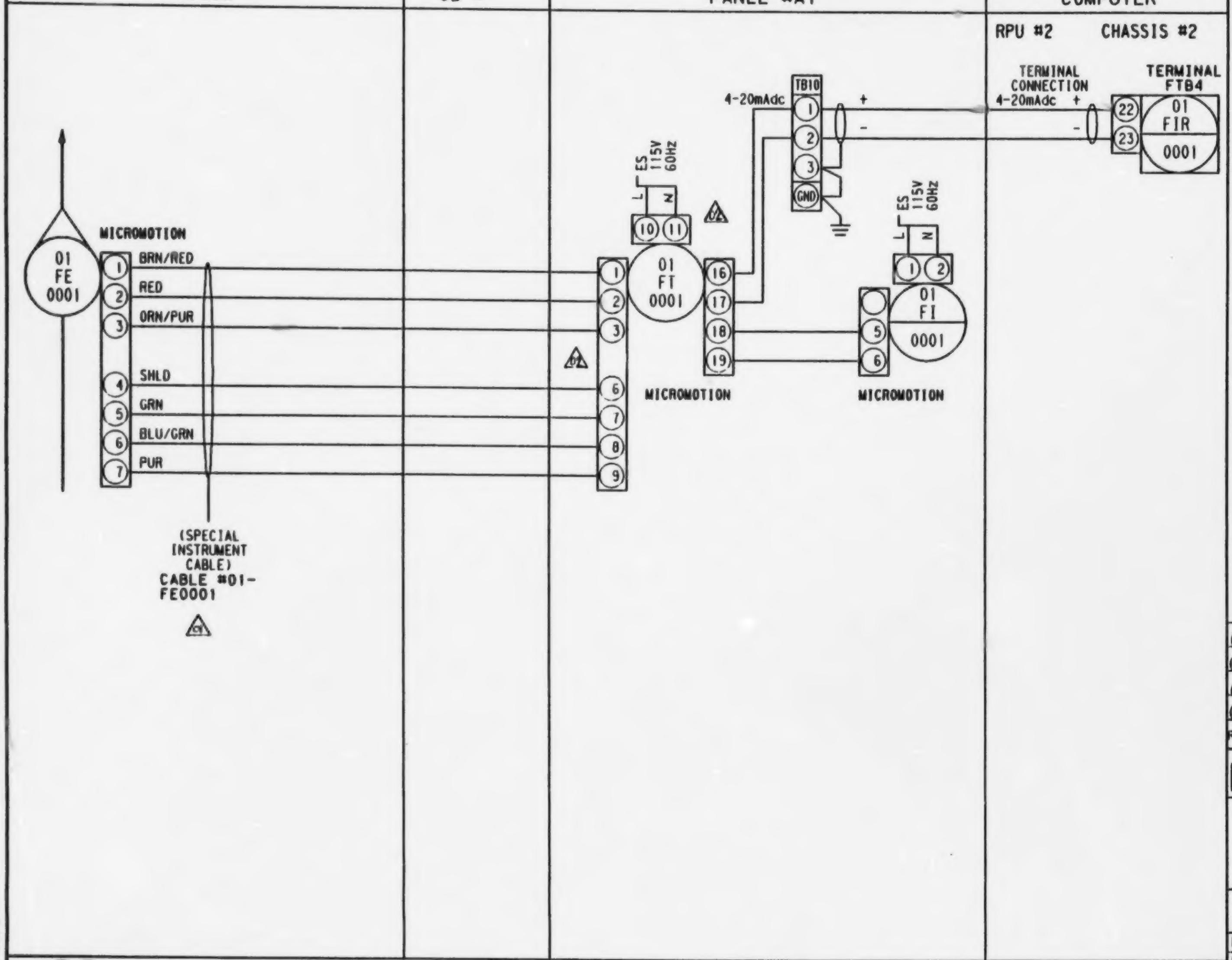

NOTES:

GENERAL NOTES:

A. 24 VAC Power Supply from GFC, Hammond Series Power Supply in panel.

B. 4-20mA signals to computer are shunted by EMR with a resistor to provide voltage signal to computer card.

C. Compatibility of voltage signals to computer programmed by EMR.

REV	DATE	DESCRIPTION	CHK	MEC APP	EMR APP
03	86.09	PH.1 FINAL	CP	RW	
02	86.08.26	TERMINAL BLOCKS REV.	CP		
01	86.07.30	CABLE # ADDED	RW		
00	86.05.15	FOR EMR APPROVAL	RPW		✓

Energy, Mines and Resources Canada — Énergie, Mines et Ressources Canada

LOOP DIAGRAM
01-F-0001
AREA 1
SLURRY FEED SYSTEM

EMR COPROCESSING PILOT PLANT
PP3

PID No.		D-3-1 -MP-2	
DRAWN	CAD	DATE	86.05.15
CHKD			REV
DESIGN			03

LOOP5

Monenco Consultants Limited

WORK ORDER No. DSS 8279-3

REG. No. 204035

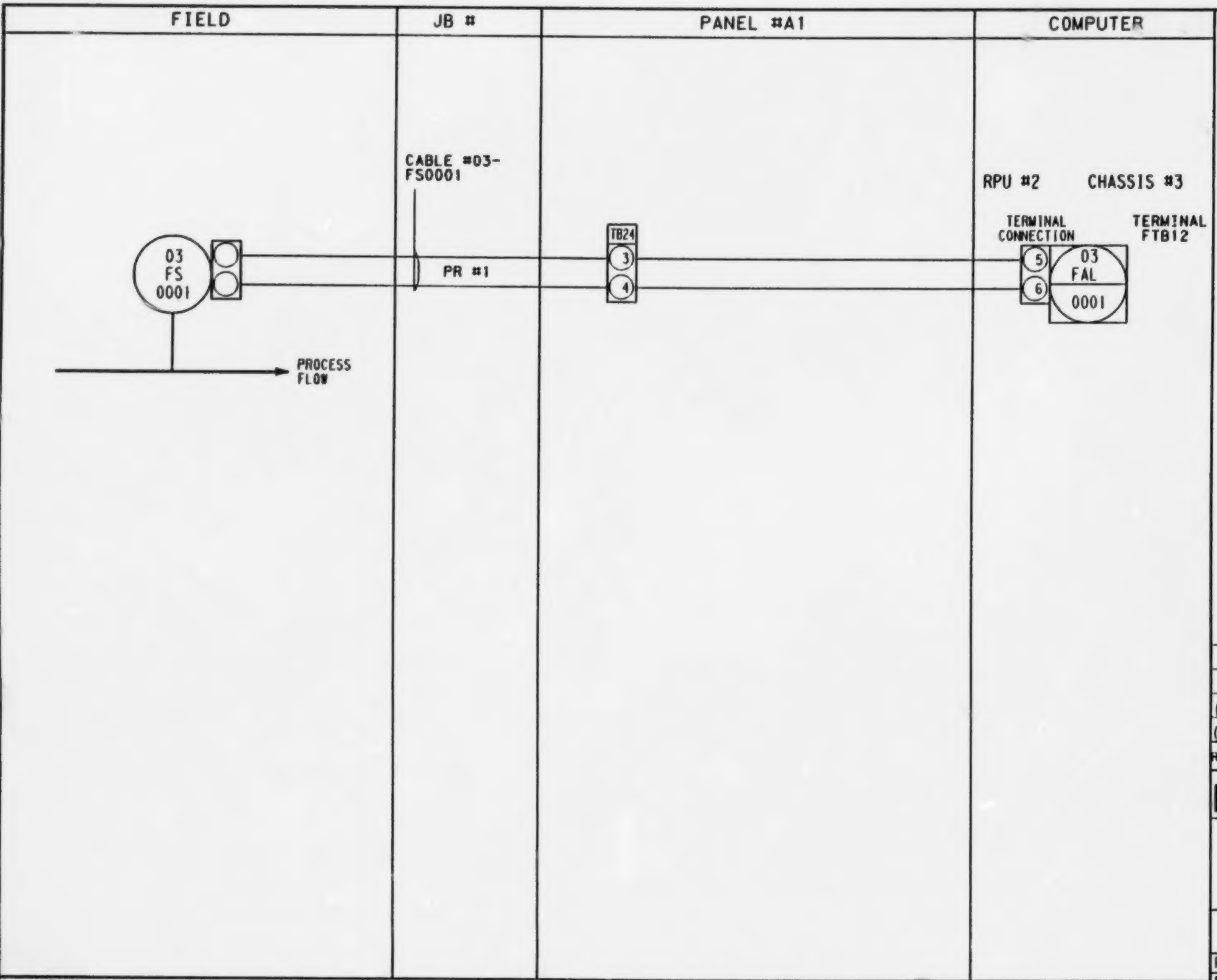

NOTES:

GENERAL NOTES:

A. 24 VAC Power Supply from GFC, Hammond Series Power Supply in panel.

B. 4-20mA signals to computer are shunted by EMR with a resistor to provide voltage signal to computer card.

C. Compatibility of voltage signals to computer programmed by EMR.

REV	DATE	DESCRIPTION	CHK	MEC APP	EMR APP
01	86.09	AU.1 FINAL			
00	86.01.15	FOR EMR APPROVAL			

Energy, Mines and Resources Canada — Énergie, Mines et Ressources Canada

LOOP DIAGRAM
03-F-0001
AREA 3
REACTOR AND SAMPLING SYSTEM

EMR COPROCESSING PILOT PLANT PP3

PID No. D-3-3 -MP-2
DRAWN CAD DATE 86.06.27
CHKD REV 01
DESIGN

Monenco Consultants Limited | WORK ORDER No. DSS 8279-3 | REG. No. 204163

LOOP

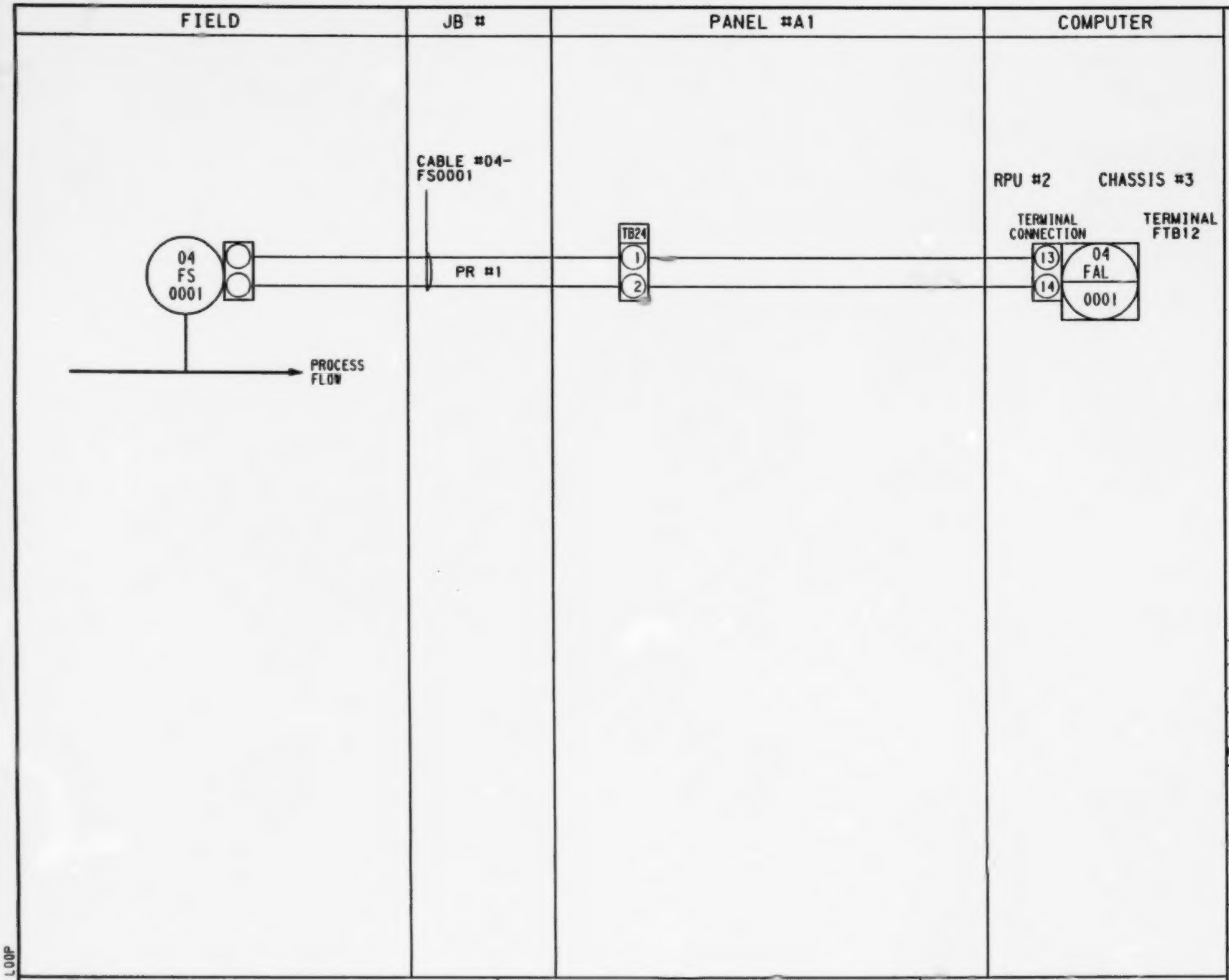

NOTES:

GENERAL NOTES:

A. 24 VAC Power Supply from GFC, Hammond Series Power Supply in panel.

B. 4-20mA signals to computer are shunted by EMR with a resistor to provide voltage signal to computer card.

C. Compatibility of voltage signals to computer programmed by EMR.

REV	DATE	DESCRIPTION	CHK	MEC APP	EMR APP
01	86.09	PH.1 FINAL	CP	PAJ	
00	86.07.15	FOR EMR APPROVAL	PAJ		✓

Energy, Mines and Resources Canada — Énergie, Mines et Ressources Canada

LOOP DIAGRAM
04-F-0001
AREA 4
HEAVY OIL SYSTEM

EMR COPROCESSING PILOT PLANT PP3

PID No.	D-3-4 -MP-1		
DRAWN	CAD	DATE	86.06.27
CHKD		REV	01
DESIGN			

LOOP B

Monenco Consultants Limited | WORK ORDER No. DSS 8279-3 | REG. No. 204162

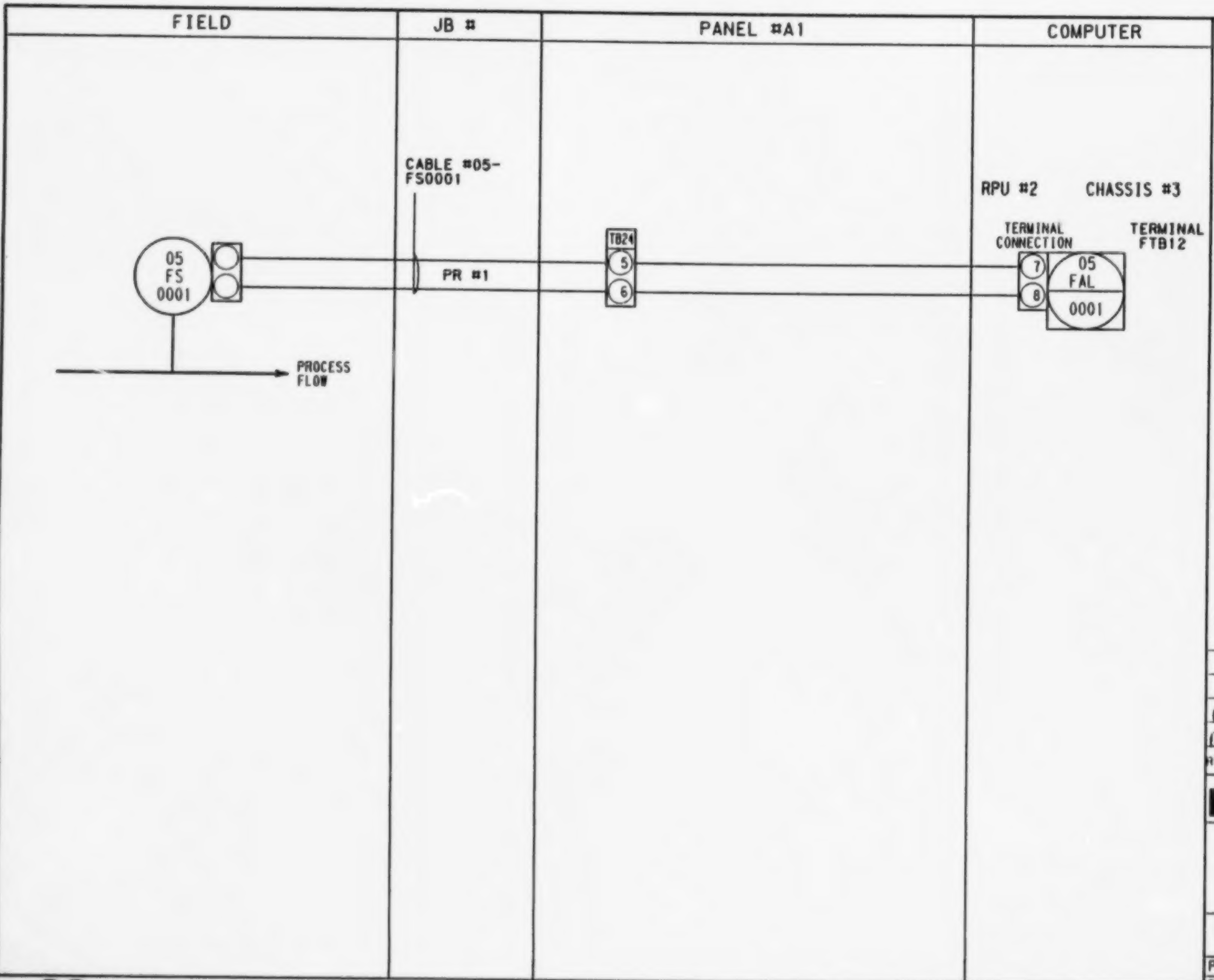

NOTES:

GENERAL NOTES:

A. 24 VAC Power Supply from GFC, Hammond Series Power Supply in panel.

B. 4-20mA signals to computer are shunted by EMR with a resistor to provide voltage signal to computer card.

C. Compatibility of voltage signals to computer programmed by EMR.

REV	DATE	DESCRIPTION	CHK	MEC APP	EMR APP
01	86.09	FINAL			
00	86.07.15	FOR EMR APPROVAL			✓

Energy, Mines and Resources Canada — Énergie, Mines et Ressources Canada

LOOP DIAGRAM
05-F-0001
AREA 5
LIGHT OIL SYSTEM

EMR COPROCESSING PILOT PLANT PP3

PID No. D-3-5 -MP-1
DRAWN CAD DATE 86.06.27
CHKD
DESIGN
REV 01

Monenco Consultants Limited | WORK ORDER No. DSS 8279-3 | REG. No. 204164

LOOP

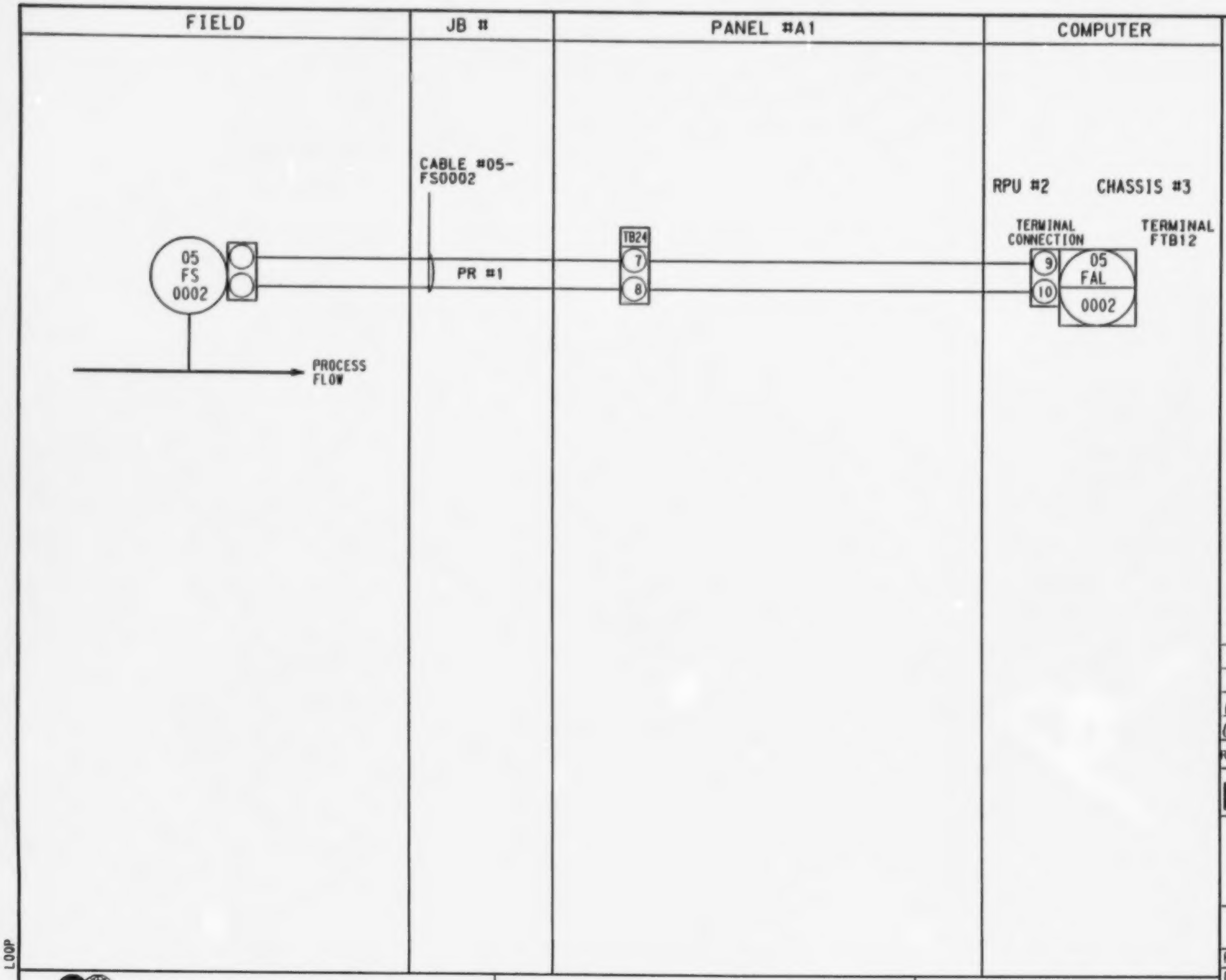

NOTES:

GENERAL NOTES:

A. 24 VAC Power Supply from GFC, Hammond Series Power Supply in panel.

B. 4-20mA signals to computer are shunted by EMR with a resistor to provide voltage signal to computer card.

C. Compatibility of voltage signals to computer programmed by EMR.

REV	DATE	DESCRIPTION	CHK	MEC APP	EMR APP
01	86.09	PH.1 FINAL	?	PAJ	
00	86.07.15	FOR EMR APPROVAL	PAJ		✓

Energy, Mines and Resources Canada — Énergie, Mines et Ressources Canada

LOOP DIAGRAM
05-F-0002
AREA 5
LIGHT OIL SYSTEM

EMR COPROCESSING PILOT PLANT
PP3

PID No.	D-3-5 -MP-2		
DRAWN	CAD	DATE	86.06.27
CHKD			REV
DESIGN			01

LOOP

Monenco Consultants Limited | WORK ORDER No. DSS 8279-3 | REG. No. 204165

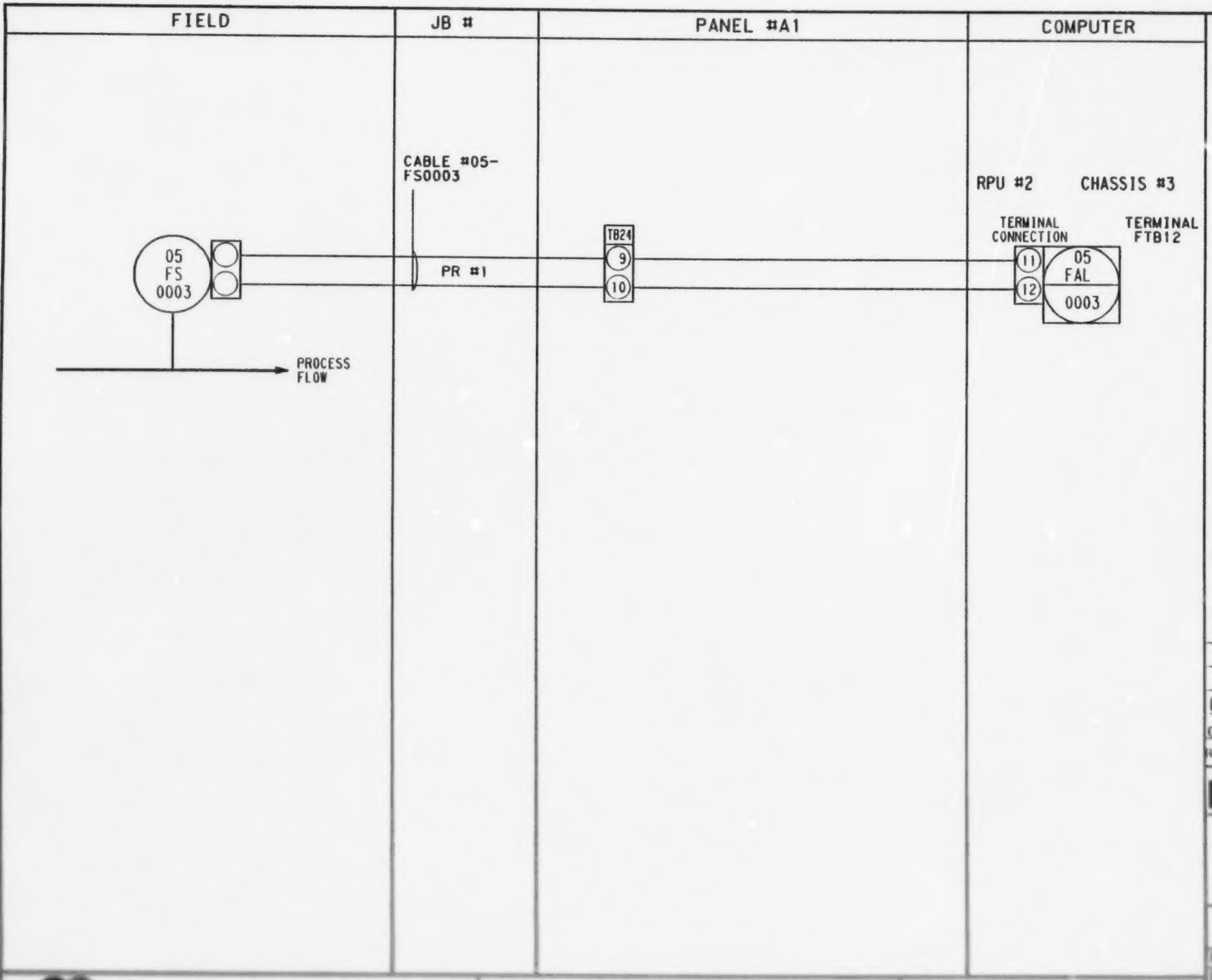

NOTES:

GENERAL NOTES:

A. 24 VAC Power Supply from GFC, Hammond Series Power Supply in panel.

B. 4-20mA signals to computer are shunted by EMR with a resistor to provide voltage signal to computer card.

C. Compatibility of voltage signals to computer programmed by EMR.

REV	DATE	DESCRIPTION	CHK	MEC APP	EMR APP
01	86.09	PA.1 FINAL			
00	86.07.15	10A EMR APPROVAL			✓

Energy, Mines and Resources Canada / Énergie, Mines et Ressources Canada

LOOP DIAGRAM
05-F-0003
AREA 5
LIGHT OIL SYSTEM

EMR COPROCESSING PILOT PLANT
PP3

PID No. D-3-5 -MP-1
DRAWN CAD DATE 86.06.27
CHKD REV 01
DESIGN

Monenco Consultants Limited — WORK ORDER No. DSS 8279-3 — REG. No. 204166

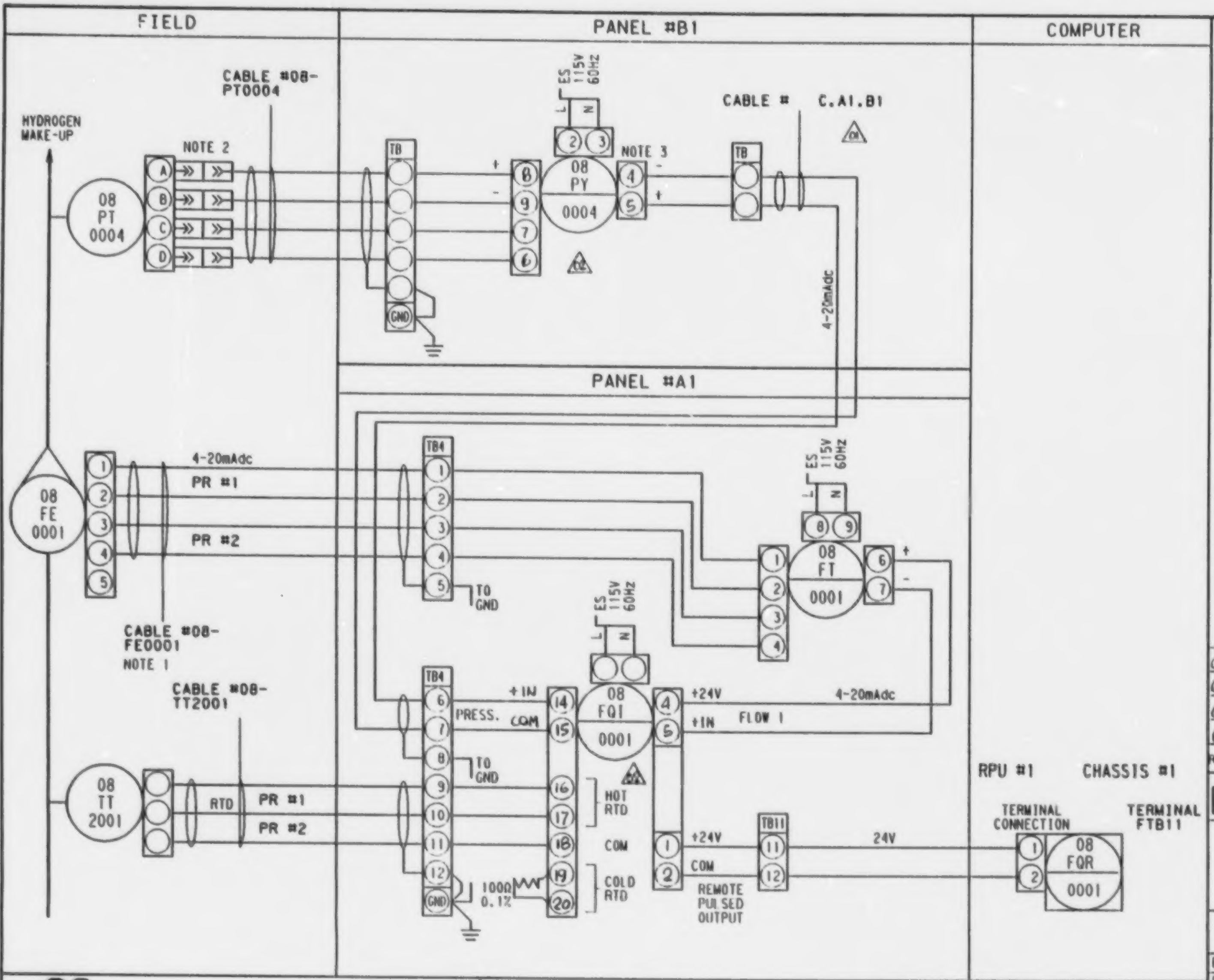

NOTES:

1. PREFERRED CABLE-MANHATTAN CABLE M3208, BELDEN 8424 OR EQUIVALENT.
2. BENDIX PT02A-10-6P CONNECTOR (PT06A-10-6S).
3. JUMPERS JU1 & JU2 REQ'D FOR 115V. USE 3AG SLO-BLOW 1/10A FUSE.

GENERAL NOTES:

A. 24 VAC Power Supply from GFC, Hammond Series Power Supply in panel.

B. 4-20mA signals to computer are shunted by EMR with a resistor to provide voltage signal to computer card.

C. Compatibility of voltage signals to computer programmed by EMR.

REV	DATE	DESCRIPTION	CHK	MEC APP	EMR APP
03	86.09	PH.1 FINAL	CP	BW	
02	86.08.26	TERMINAL #'S REVISED	CP		
01	86.07.30	CABLE # CHANGED	BW		
00	86.01.15	FOR EMR APPROVAL	BW		✓

Energy, Mines and Resources Canada — Énergie, Mines et Ressources Canada

LOOP DIAGRAM
08-F-0001
AREA 8
RECYCLE GAS SYSTEM

EMR COPROCESSING PILOT PLANT PP3

PID No.	D-3-8 -MP-1		
DRAWN	CAD	DATE	86.05.15
CHKD			REV 03
DESIGN			

Monenco Consultants Limited

WORK ORDER No. DSS 8279-3

REG. No. 204098

LOOP

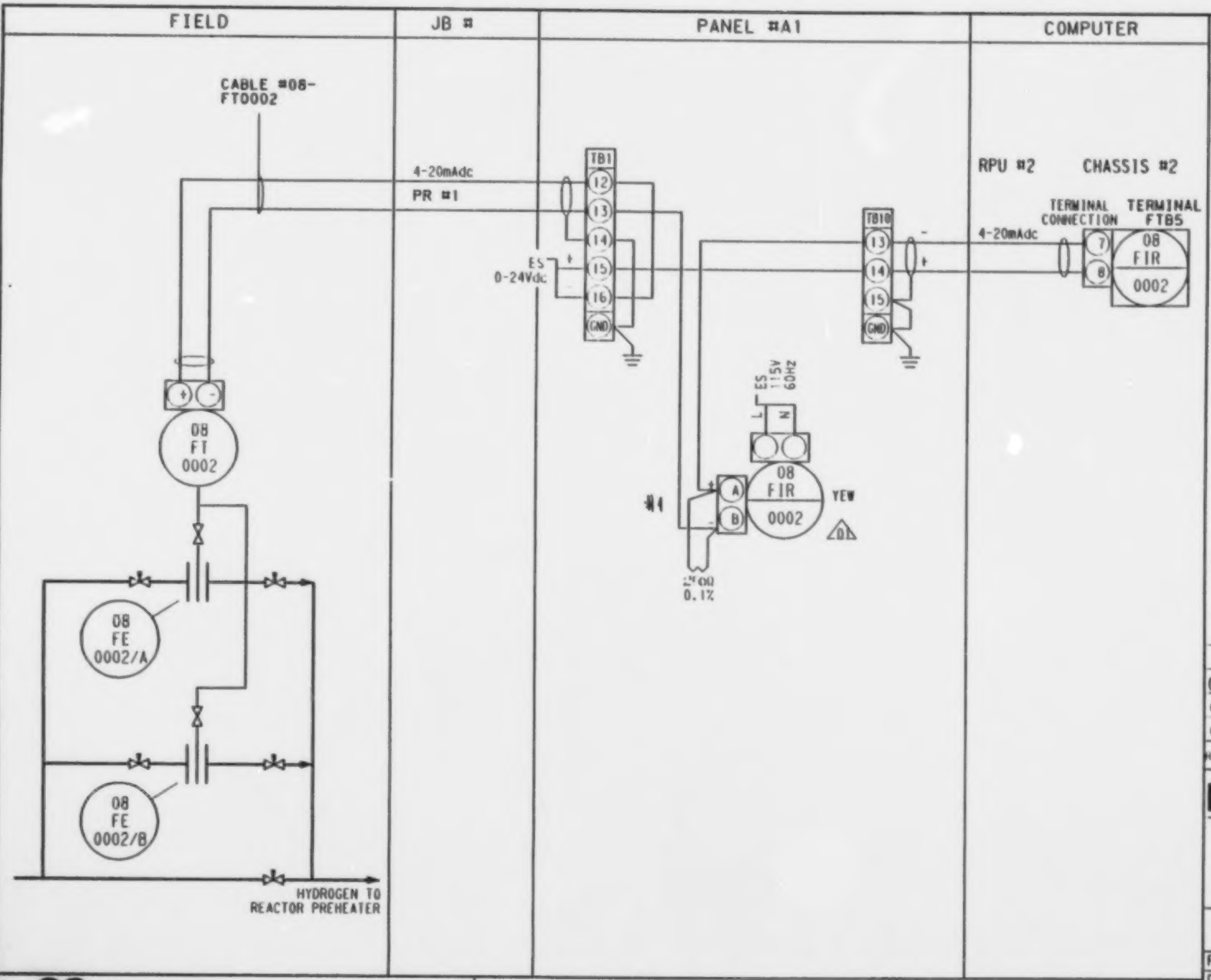

NOTES:

GENERAL NOTES:

A. 24 VAC Power Supply from GFC, Hammond Series Power Supply in panel.

B. 4-20mA signals to computer are shunted by EMR with a resistor to provide voltage signal to computer card.

C. Compatibility of voltage signals to computer programmed by EMR.

REV	DATE	DESCRIPTION	CHK	MEC APP	EMR APP
02	86.09	ALL FINAL			
01	86.08.21	RECORDER TYPE CHANGED			
00	86.07.15	FOR EMR APPROVAL	RW		

Energy, Mines and Resources Canada — Énergie, Mines et Ressources Canada

LOOP DIAGRAM
08-F-0002
AREA 8
RECYCLE GAS SYSTEM

EMR COPROCESSING PILOT PLANT
PP3

PID No.	D-3-8 -MP-1		
DRAWN	CAD	DATE	86.05.15
CHKD			REV
DESIGN			02

Monenco Consultants Limited

WORK ORDER No. DSS 8279-3

REG. No. 204099

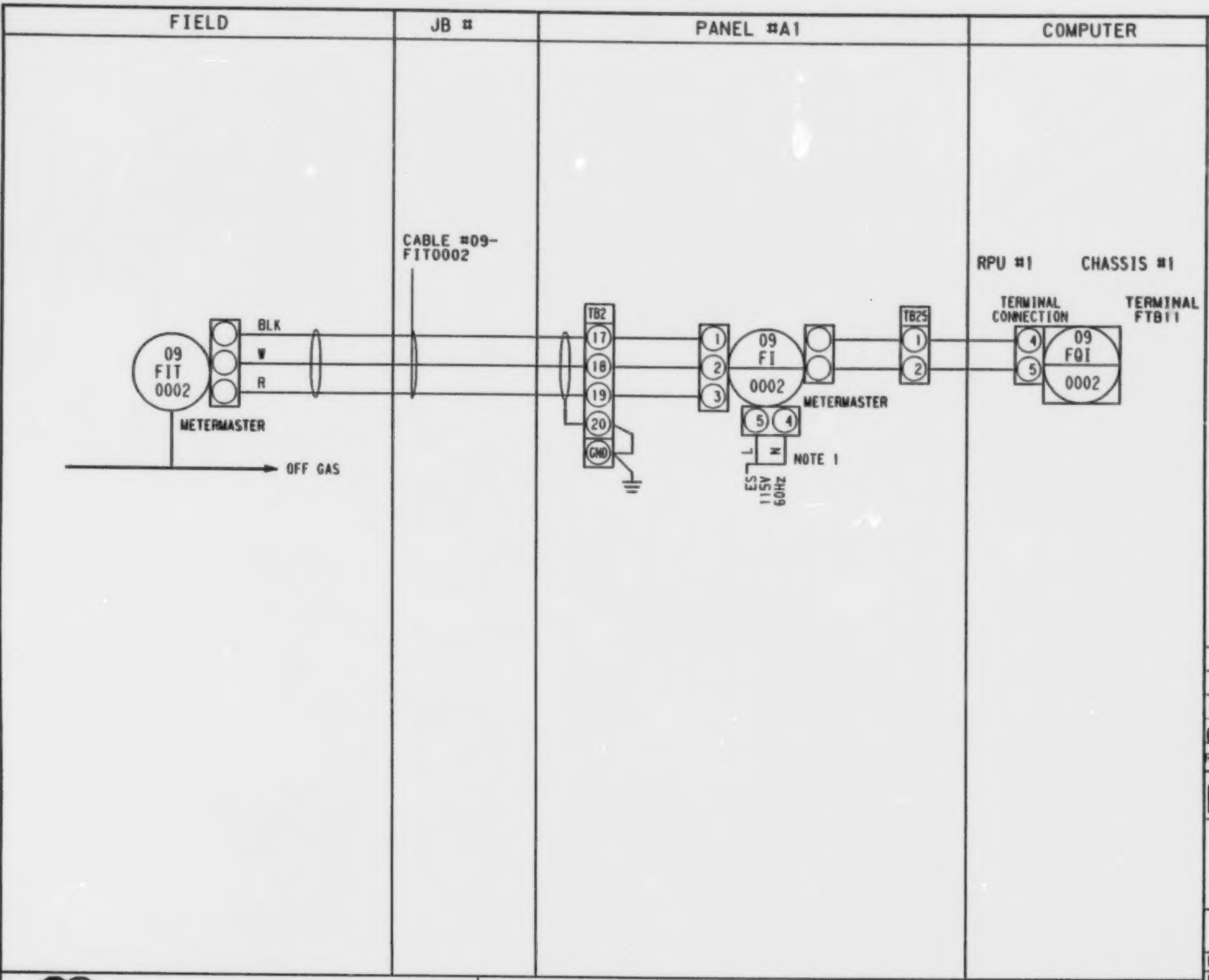

NOTES:
1. CONNECT GROUND WIRE IN POWER SUPPLY TO GROUNDING LUG ON CASE.

GENERAL NOTES:

A. 24 VAC Power Supply from GFC, Hammond Series Power Supply in panel.

B. 4-20mA signals to computer are shunted by EMR with a resistor to provide voltage signal to computer card.

C. Compatibility of voltage signals to computer programmed by EMR.

REV	DATE	DESCRIPTION	CHK	MEC APP	EMR APP
01	86.09	PH.1 FINAL	CP	RA/	
00	86.01.15	10% EMR APPROVAL	RA/		✓

Energy, Mines and Resources Canada / Énergie, Mines et Ressources Canada

LOOP DIAGRAM
09-F-0002
AREA 9
OFF GAS SYSTEM

EMR COPROCESSING PILOT PLANT PP3

PID No.	D-3-9 -MP-1		
DRAWN	CAD	DATE	86.06.27
CHKD			REV
DESIGN			01

LOOP

B

Monenco Consultants Limited

WORK ORDER No. DSS 8279-3

REG. No. 204156

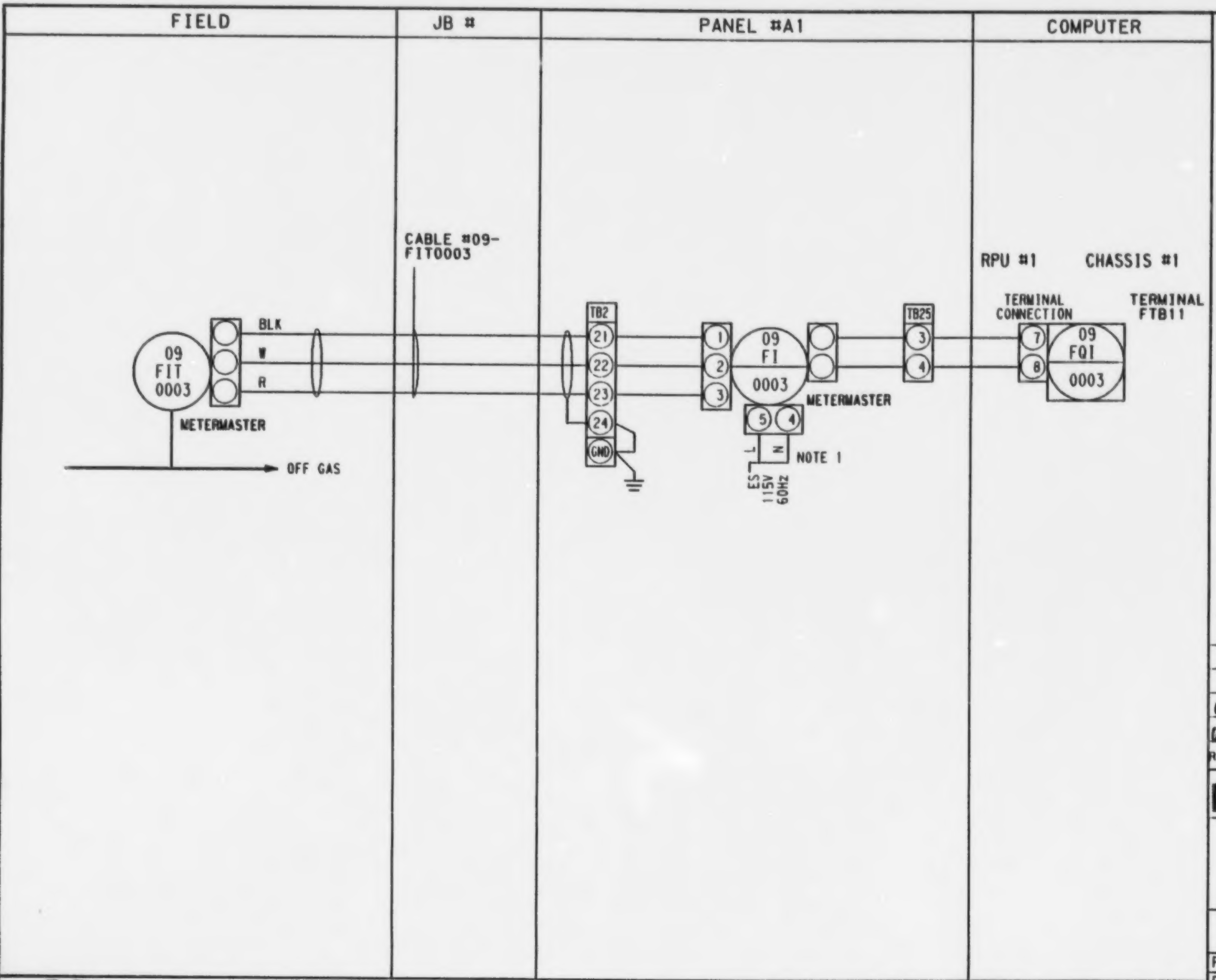

NOTES:
1. CONNECT GROUND WIRE IN POWER SUPPLY TO GROUNDING LUG ON CASE.

GENERAL NOTES:

A. 24 VAC Power Supply from GFC, Hammond Series Power Supply in panel.

B. 4-20mA signals to computer are shunted by EMR with a resistor to provide voltage signal to computer card.

C. Compatibility of voltage signals to computer programmed by EMR.

REV	DATE	DESCRIPTION	CHK	MEC APP	EMR APP
01	86.09	PH.I FINAL		RPL	
00	86.07.15	FOR EMR APPROVAL	RPL		✓

Energy, Mines and Resources Canada — Énergie, Mines et Ressources Canada

LOOP DIAGRAM
09-F-0003
AREA 9
OFF GAS SYSTEM

EMR COPROCESSING PILOT PLANT
PP3

PID No.	D-3-9 -MP-1		
DRAWN	CAD	DATE	86.06.27
CHKD			REV
DESIGN			01

Monenco Consultants Limited | WORK ORDER No. DSS 8279-3 | REG. No. 204157

LOOP

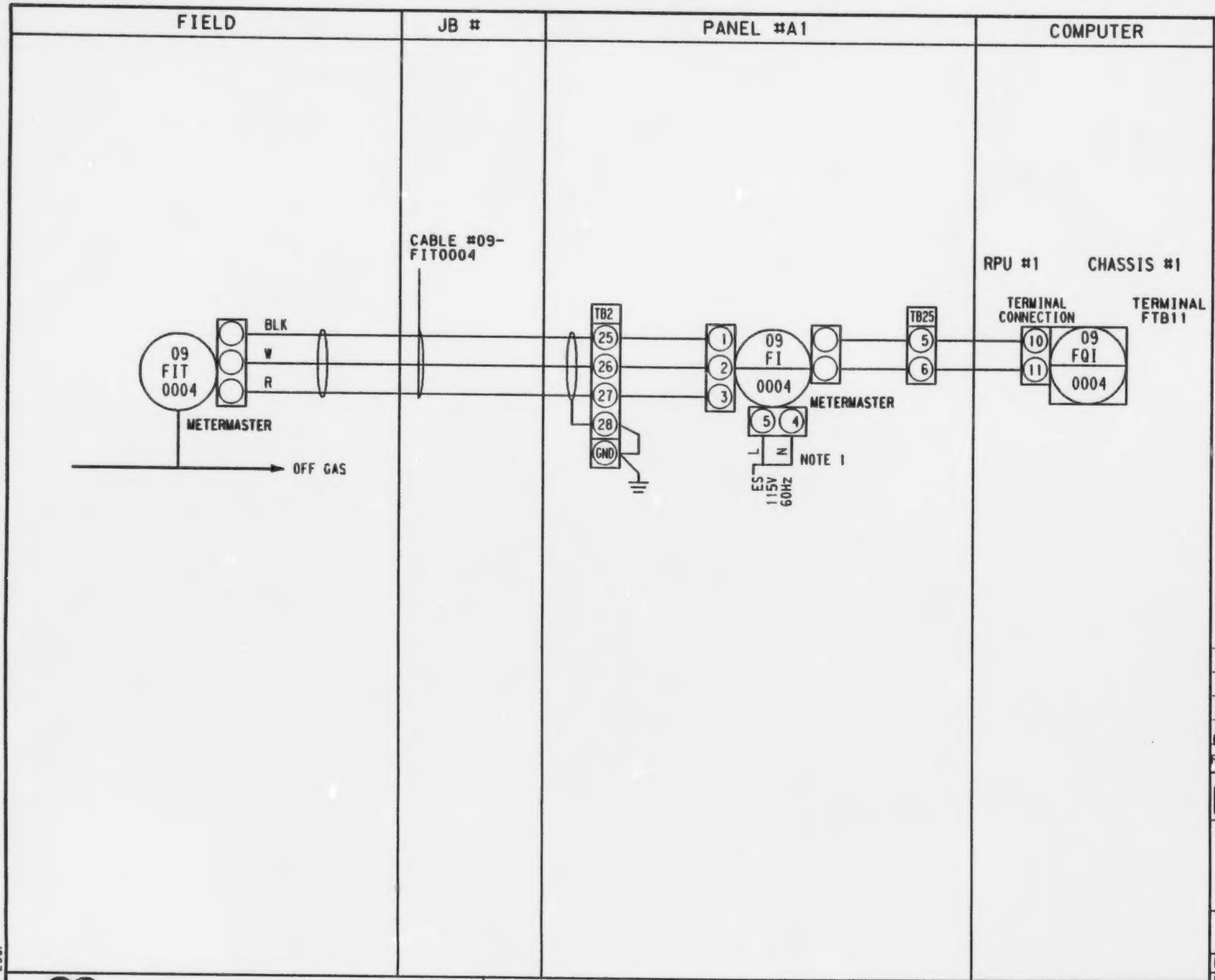

NOTES:

1. CONNECT GROUND WIRE IN POWER SUPPLY TO GROUNDING LUG ON CASE.

GENERAL NOTES:

A. 24 VAC Power Supply from GFC, Hammond Series Power Supply in panel.

B. 4-20mA signals to computer are shunted by EMR with a resistor to provide voltage signal to computer card.

C. Compatibility of voltage signals to computer programmed by EMR.

REV	DATE	DESCRIPTION	CHK	MEC APP	EMR APP
01	86.09	AU FINAL	CP	RW	
00	86.07.15	FOR EMR APPROVAL	RW		✓

Energy, Mines and Resources Canada — Énergie, Mines et Ressources Canada

LOOP DIAGRAM
09-F-0004
AREA 9
OFF GAS SYSTEM

EMR COPROCESSING PILOT PLANT
PP3

PID No.	D-3-9 -MP-1		
DRAWN	CAD	DATE	86.06.27
CHKD			REV
DESIGN			01

Monenco Consultants Limited

WORK ORDER No. DSS 8279-3

REG. No. 204158

LOOP

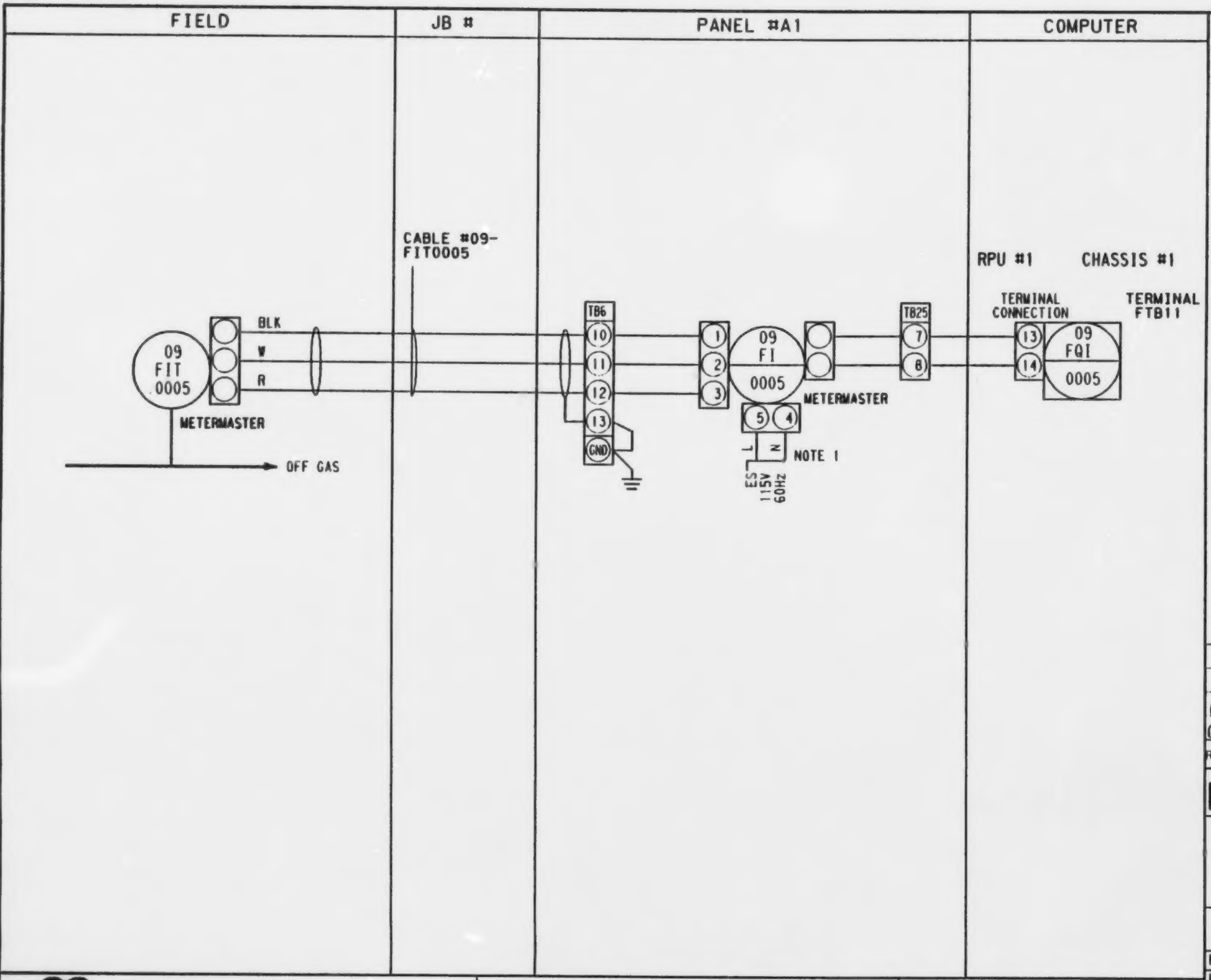

NOTES:
1. CONNECT GROUND WIRE IN POWER SUPPLY TO GROUNDING LUG ON CASE.

GENERAL NOTES:

A. 24 VAC Power Supply from GFC, Hammond Series Power Supply in panel.

B. 4-20mA signals to computer are shunted by EMR with a resistor to provide voltage signal to computer card.

C. Compatibility of voltage signals to computer programmed by EMR.

REV	DATE	DESCRIPTION	CHK	MEC APP	EMR APP
01	86.09	PH.1 FINAL	CP	RW	
00	86.07.15	FOR EMR APPROVAL	RW		✓

Energy, Mines and Resources Canada — Énergie, Mines et Ressources Canada

LOOP DIAGRAM
09-F-0005
AREA 9
OFF GAS SYSTEM

EMR COPROCESSING PILOT PLANT
PP3

PID No.	D-3-9 -MP-1		
DRAWN	CAD	DATE	86.06.27
CHKD			REV 01
DESIGN			

Monenco Consultants Limited | WORK ORDER No. DSS 8279-3 | REG. No. 204159

LOOP

B

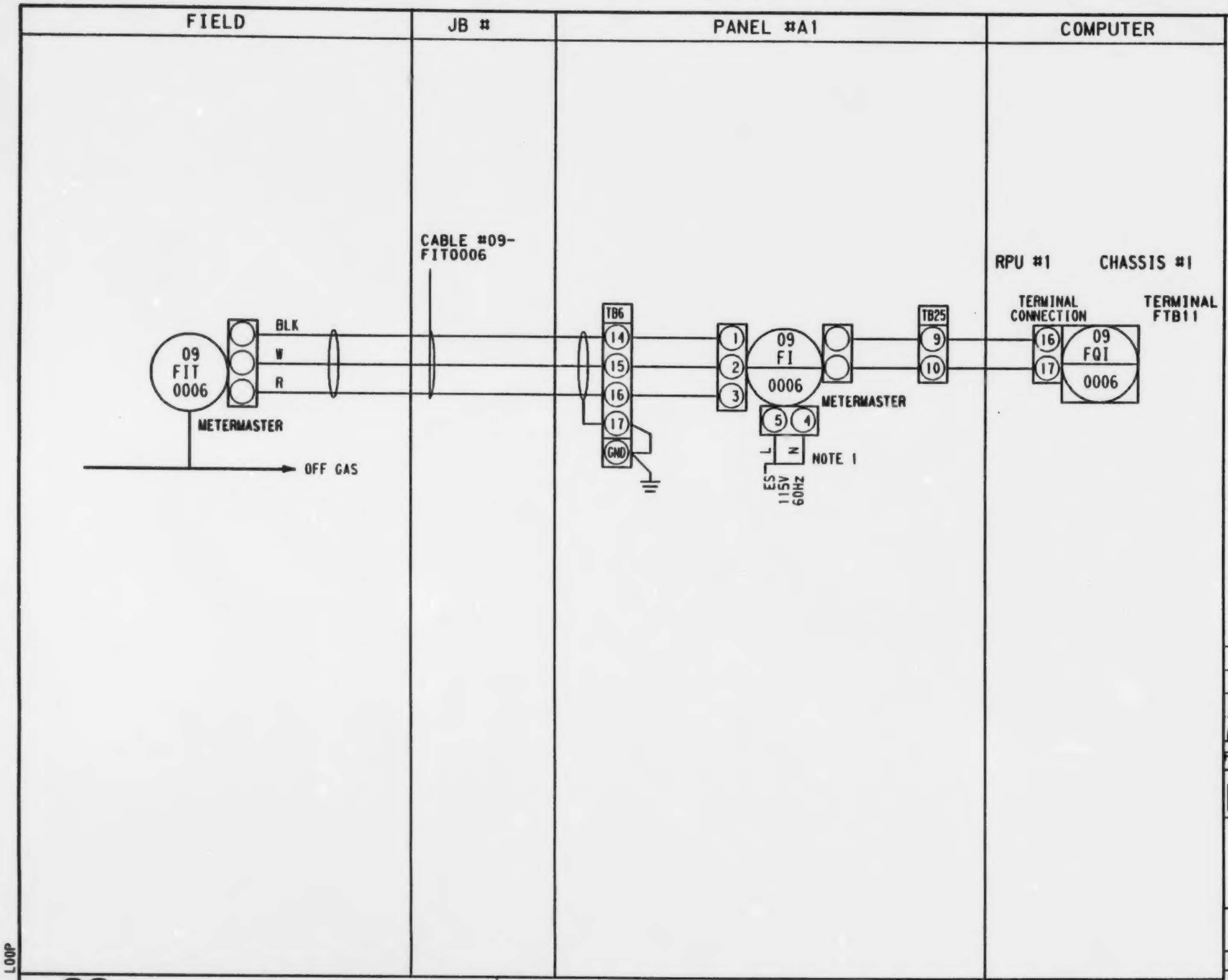

NOTES:

1. CONNECT GROUND WIRE IN POWER SUPPLY TO GROUNDING LUG ON CASE.

GENERAL NOTES:

A. 24 VAC Power Supply from GFC, Hammond Series Power Supply in panel.

B. 4-20mA signals to computer are shunted by EMR with a resistor to provide voltage signal to computer card.

C. Compatibility of voltage signals to computer programmed by EMR.

REV	DATE	DESCRIPTION	CHK	MEC APP	EMR APP
01	86.09	PH.1 FINAL	CP		
00	86.07.15	FOR EMR APPROVAL			✓

Energy, Mines and Resources Canada — Énergie, Mines et Ressources Canada

LOOP DIAGRAM
09-F-0006
AREA 9
OFF GAS SYSTEM

EMR COPROCESSING PILOT PLANT
PP3

PID No.	D-3-9 -MP-1		
DRAWN	CAD	DATE	86.06.27
CHKD		REV	01
DESIGN			

Monenco Consultants Limited — WORK ORDER No. DSS 8279-3 — REG. No. 204160

LOOP B

LIQUID LEVEL CONTROLLER, WEIGHT SCALE AND MISCELLANEOUS LOOPS

LOOP NUMBER	REGISTRATION NUMBER	LOOP NUMBER	REGISTRATION NUMBER	LOOP NUMBER	REGISTRATION NUMBER
05-L-0001	204036				
06-L-0001	204034				
07-L-0001	204033				
13-L-0001/0003	204170				
13-L-0001/0004	204171				
01-W-0002	204090				
01-W-0004	204091				
04-W-0001	204094				
04-W-0002	204092				
05-W-0001	204093				
11-W-0001	204095				
13-W-0001	204096 △01				
09-A-0001	204155				
03-K-0001	204089				
13-QL-0007	204032				
13-X-0006	204154 △02				

NOTES:

SHIELDING, GROUNDING, CONDUCTOR IDENTIFICATION:

1. MULTICORE TX WIRE TO HAVE INDIVIDUAL PAIR SHIELDS. ALL OTHER SIGNALS UNSHIELDED.
2. ENSURE SHIELD CONTINUITY FROM SOURCE TO RECEIVER THROUGH INTERMEDIATE TERMINALS.
3. GROUND SHIELD AT INSTRUMENT PANEL ONLY. JUMPER ALL SHIELDS PER LOOP. IF RECEIVER AND SOURCE ARE IN FIELD, GROUND SHIELD AT SOURCE INSTRUMENT.
4. INTERNAL WIRING IN PANELS NOT TO BE SHIELDED.
5. ALL OUTER CASES OF INSTRUMENT CASES TO BE GROUNDED.
6. CONDUCTOR IDENTIFICATION:
   a) SIGNAL WIRE - CABLE NUMBER TO USE TAG No. OF SOURCE INSTRUMENT PLUS SERIAL No.-1, -2, etc.
   b) TX WIRE - USE SIGNAL WIRE DESIGNATION FOR CABLE No. AND PAIR No.

SYMBOLS:

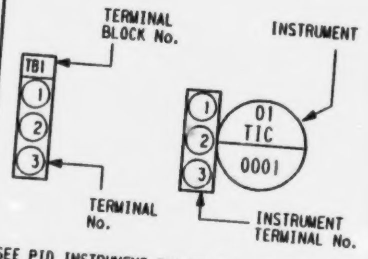

SEE PID, INSTRUMENT SYMBOL SHEET D-3-01-MP-2 FOR INSTRUMENT SYMBOL IDENTIFICATION PER ISA S51.1.

REV	DATE	DESCRIPTION	CHK	MEC APP	EMR APP
02	86.09	PH.1 FINAL	CP	RDJ	
01	AUG 08/86	13-W-0001 ADDED	CP		
00	JUL 15/86	FOR EMR APPROVAL	RW		✓

Energy, Mines and Resources Canada — Énergie, Mines et Ressources Canada

LIST OF LIQUID LEVEL CONTROLLER, WEIGHT SCALE AND MISCELLANEOUS LOOPS

INSTRUMENT LOOP DIAGRAM COVER SHEET

EMR COPROCESSING PILOT PLANT PP3

Monenco Consultants Limited

WORK ORDER No. DSS 8279-3

REG. No. 204306

DRAWN
CHKD
DESIGN
CAD DATE 86.07.03
REV 02

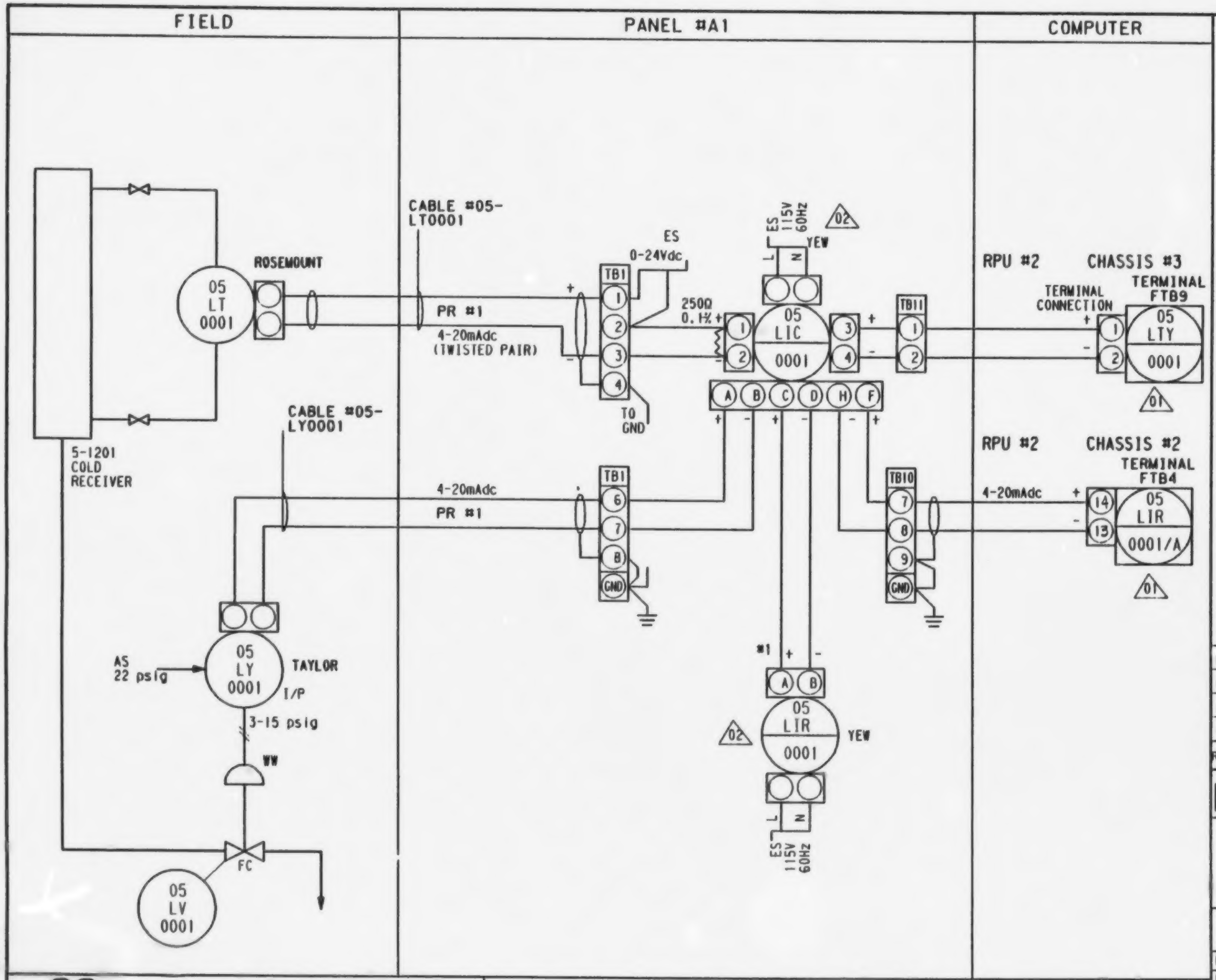

NOTES:

1. SET CONTROL MODE BY PRESSING OPERATION MODE TRANSFER SWITCH 'C' ON CONTROLLER FRONT PANEL.
2. SET CONTROL VALVE ACTION BY PRESSING CONTROL VALVE ACTION SWITCH 'C' ON CONTROLLER FRONT PANEL.

GENERAL NOTES:

A. 24 VAC Power Supply from GFC, Hammond Series Power Supply in panel.

B. 4-20mA signals to computer are shunted by EMR with a resistor to provide voltage signal to computer card.

C. Compatibility of voltage signals to computer programmed by EMR.

REV	DATE	DESCRIPTION	CHK	MEC APP	EMR APP
03	86.09	Rev. Final	cP		
02	08 28-86	CONTROLLER & RECORDER TYPE CHANGED	RW		
01	07 29-86	INSTRUMENT SYMBOL CHANGED	RW		
00	07 15-86	FOR EMR APPROVAL	RW		

Energy, Mines and Resources Canada — Énergie, Mines et Ressources Canada

LOOP DIAGRAM
05-L-0001
AREA 5
LIGHT OIL SYSTEM

EMR COPROCESSING PILOT PLANT
PP3

PID No.	D-3-5 -MP-1		
DRAWN	CAD	DATE	86.06.27
CHKD			REV
DESIGN			03

Monenco Consultants Limited

WORK ORDER No. DSS 8279-3

REG. No. 204036

LOOP11

B

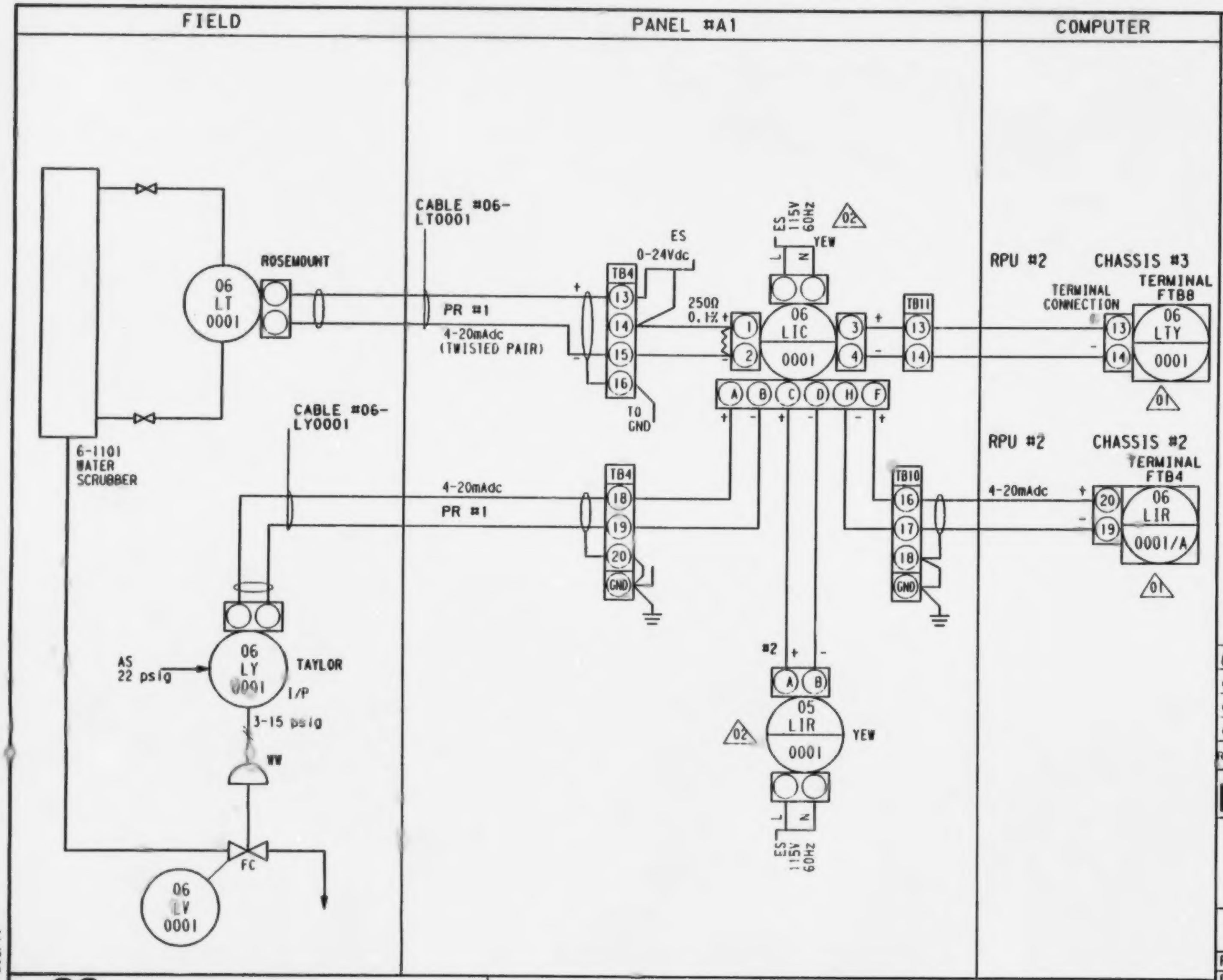

NOTES:

1. SET CONTROL MODE BY PRESSING OPERATION MODE TRANSFER SWITCH 'C' ON CONTROLLER FRONT PANEL.
2. SET CONTROL VALVE ACTION BY PRESSING CONTROL VALVE ACTION SWITCH 'C' ON CONTROLLER FRONT PANEL.

GENERAL NOTES:

A. 24 VAC Power Supply from GFC, Hammond Series Power Supply in panel.

B. 4-20mA signals to computer are shunted by EMR with a resistor to provide voltage signal to computer card.

C. Compatibility of voltage signals to computer programmed by EMR.

REV	DATE	DESCRIPTION	CHK	MEC APP	EMR APP
03	86.09	PH.4 FINAL	OP	[illegible]	
02	08 28-86	CONTROLLER & RECORDER TYPE CHANGED	RW		
01	07 29-86	INSTRUMENT SYMBOLS CHANGED	RW		
00	07 15-86	FOR EMR APPROVAL	RW		

Energy, Mines and Resources Canada / Énergie, Mines et Ressources Canada

LOOP DIAGRAM
06-L-0001
AREA 6
WATER SCRUBBER SYSTEM

EMR COPROCESSING PILOT PLANT PP3

PID No.	D-3-6 -MP-1		
DRAWN	CAD	DATE	86.06.27
CHKD			REV
DESIGN			03

Monenco Consultants Limited

WORK ORDER No. DSS 8279-3

REG. No. 204034

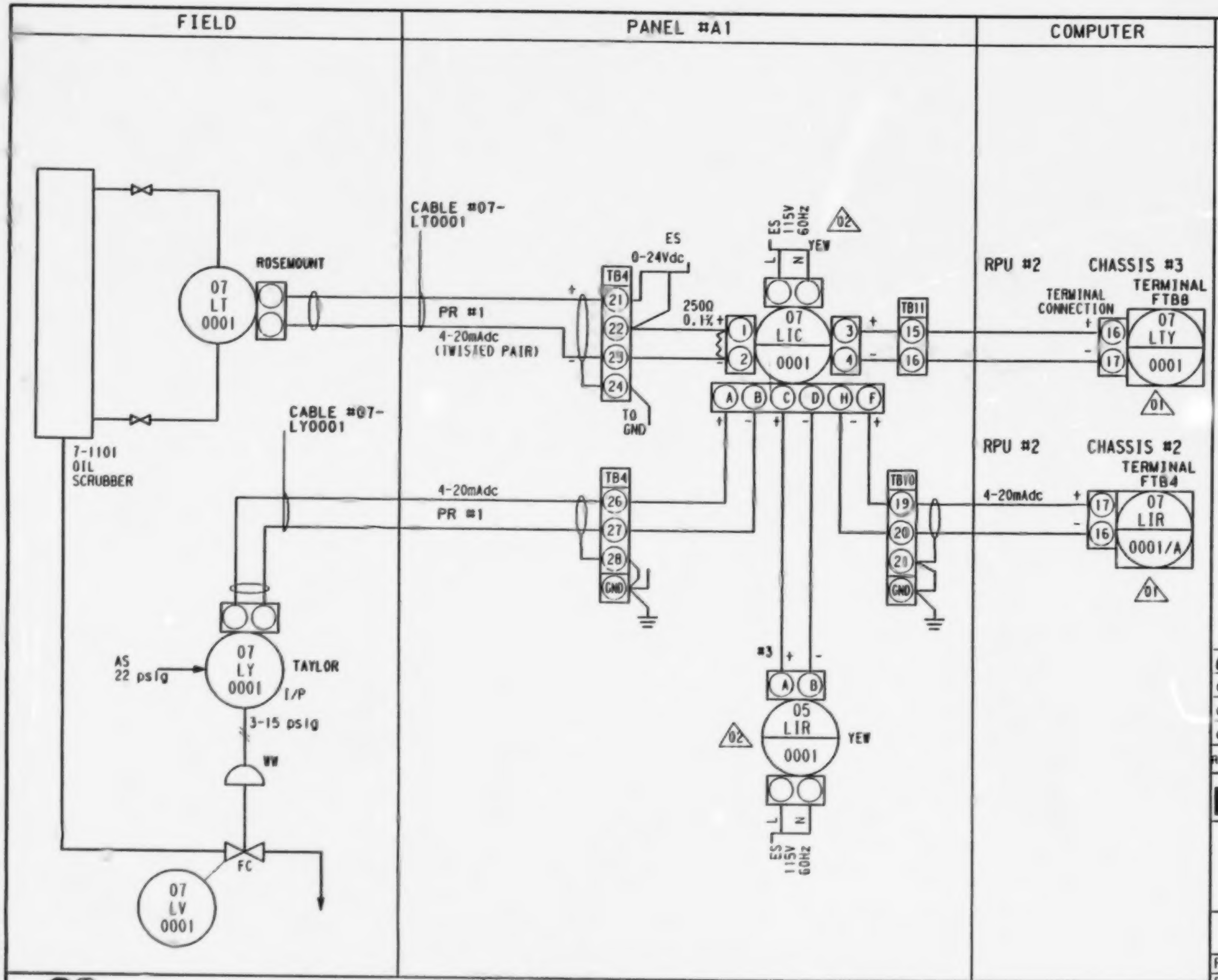

NOTES:

1. SET CONTROL MODE BY PRESSING OPERATION MODE TRANSFER SWITCH 'C' ON CONTROLLER FRONT PANEL.
2. SET CONTROL VALVE ACTION BY PRESSING CONTROL VALVE ACTION SWITCH 'C' ON CONTROLLER FRONT PANEL.

GENERAL NOTES:

A. 24 VAC Power Supply from GFC, Hammond Series Power Supply in panel.

B. 4-20mA signals to computer are shunted by EMR with a resistor to provide voltage signal to computer card.

C. Compatibility of voltage signals to computer programmed by EMR.

REV	DATE	DESCRIPTION	CHK	MEC APP	EMR APP
03	86.09	PH.I FINAL			
02	08 28-86	CONTROLLER & RECORDER TYPE CHANGED	RW		
01	07 29-86	INSTRUMENT SYMBOLS CHANGED	RW		
00	07 15-86	FOR EMR APPROVAL	RW		

Energy, Mines and Resources Canada — Énergie, Mines et Ressources Canada

LOOP DIAGRAM
07-L-0001
AREA 7
OIL SCRUBBER SYSTEM

EMR COPROCESSING PILOT PLANT
PP3

PID No.	D-3-7 -MP-1		
DRAWN	CAD	DATE	86.06.27
CHKD			REV
DESIGN			03

Monenco Consultants Limited

WORK ORDER No. DSS 8279-3

REG. No. 204033

LOOP11

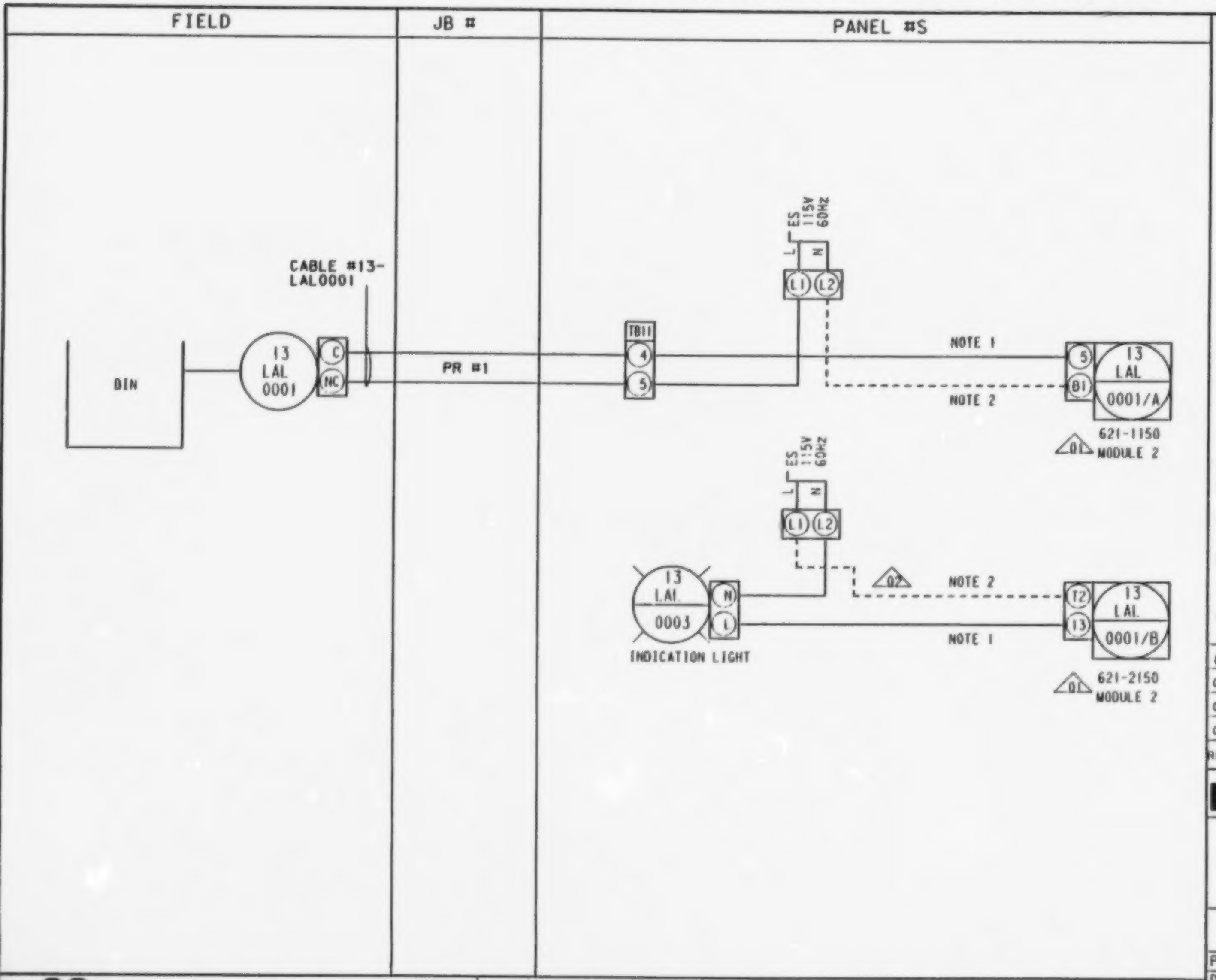

NOTES:
1. HONEYWELL PLC CONNECTIONS.
2. INTERNAL WIRING WITHIN HONEYWELL PLC.

GENERAL NOTES:

A. 24 VAC Power Supply from GFC, Hammond Series Power Supply in panel.

B. 4-20mA signals to computer are shunted by EMR with a resistor to provide voltage signal to computer card.

C. Compatibility of voltage signals to computer programmed by EMR.

REV	DATE	DESCRIPTION	CHK	MEC APP	EMR APP
03	86.09	PH.1 FINAL	CP	[illegible]	
02	86.08.21	LIGHT CONNECTIONS	CP		
01	86.08.4	PLC MODULE&TERM.#'S	RW		
00	86.08.15	FOR EMR APPROVAL	RW		✓

Energy, Mines and Resources Canada — Énergie, Mines et Ressources Canada

LOOP DIAGRAM
13-L-0001/0003
AREA 13
SLURRY FEED SYSTEM

EMR COPROCESSING PILOT PLANT
PP3

PID No.	D-3-13-MP-1		
DRAWN	CAD	DATE	86.05.15
CHKD			REV
DESIGN			03

Monenco Consultants Limited | WORK ORDER No. DSS 8279-3 | REG. No. 204170

LOOP

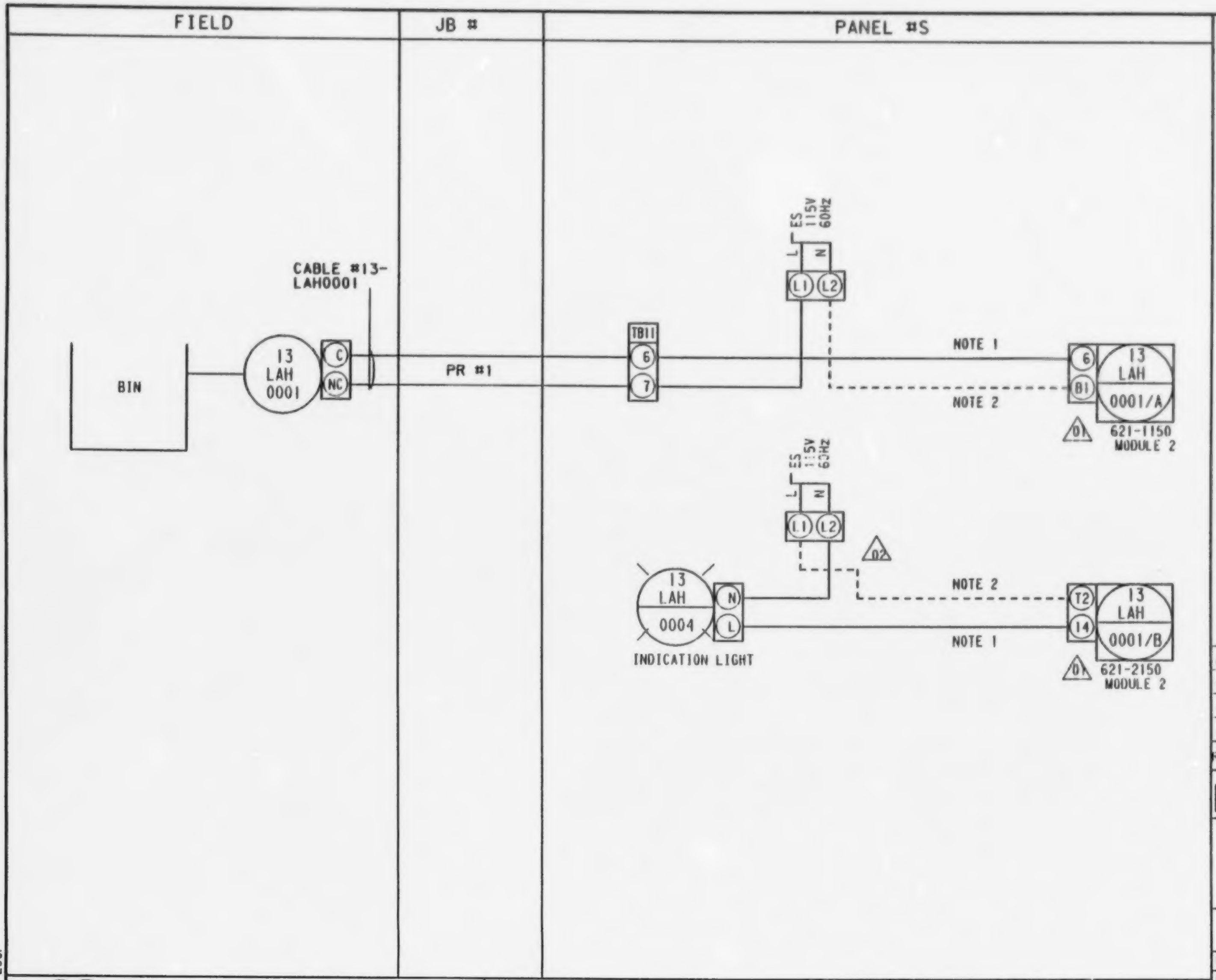

NOTES:
1. HONEYWELL PLC CONNECTIONS.
2. INTERNAL WIRING WITHIN HONEYWELL PLC.

GENERAL NOTES:

A. 24 VAC Power Supply from GFC, Hammond Series Power Supply in panel.

B. 4-20mA signals to computer are shunted by EMR with a resistor to provide voltage signal to computer card.

C. Compatibility of voltage signals to computer programmed by EMR.

REV	DATE	DESCRIPTION	CHK	MEC APP	EMR APP
03	86.09	PH.1 FINAL	CP	[signature]	
02	08 86.21	LIGHT CONNECTIONS	CP		
01	08 86.4	PIC MODULE & TERM.#'S	RW		
00	07 86.15	FOR EMR APPROVAL	RW		✓

Energy, Mines and Resources Canada — Énergie, Mines et Ressources Canada

LOOP DIAGRAM
13-L-0001/0004
AREA 13
SLURRY FEED SYSTEM

EMR COPROCESSING PILOT PLANT
PP3

PID No.	D-3-13-MP-1		
DRAWN	CAD	DATE	86.05.15
CHKD			REV
DESIGN			03

Monenco Consultants Limited | WORK ORDER No. DSS 8279-3 | REG. No. 204171

LOOP

B

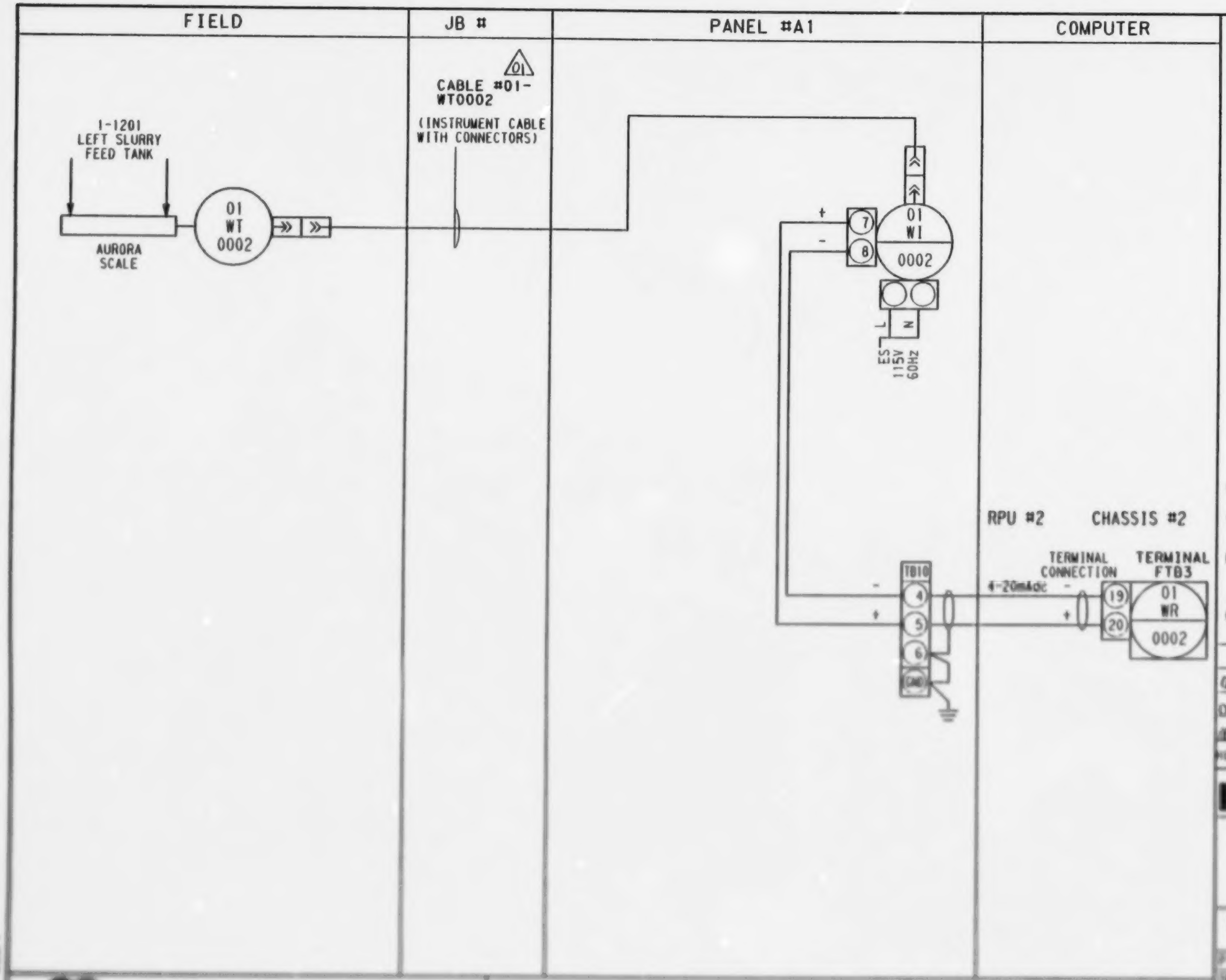

NOTES:

GENERAL NOTES:

A. 24 VAC Power Supply from GFC, Hammond Series Power Supply in panel.

B. 4-20mA signals to computer are shunted by EMR with a resistor to provide voltage signal to computer card.

C. Compatibility of voltage signals to computer programmed by EMR.

REV	DATE	DESCRIPTION	CHK	MEC APP	EMR APP
02		AIH FINAL			
01		CABLE # ADDED			
00		FOR EMR APPROVAL			✓

Energy, Mines and Resources Canada / Énergie, Mines et Ressources Canada

LOOP DIAGRAM
01-W-0002
AREA 1
SLURRY FEED SYSTEM

EMR COPROCESSING PILOT PLANT
PP3

D-3-1 -WP-1

Monenco Consultants Limited

WORK ORDER No. DSS 8279-3

REG. No. 204090

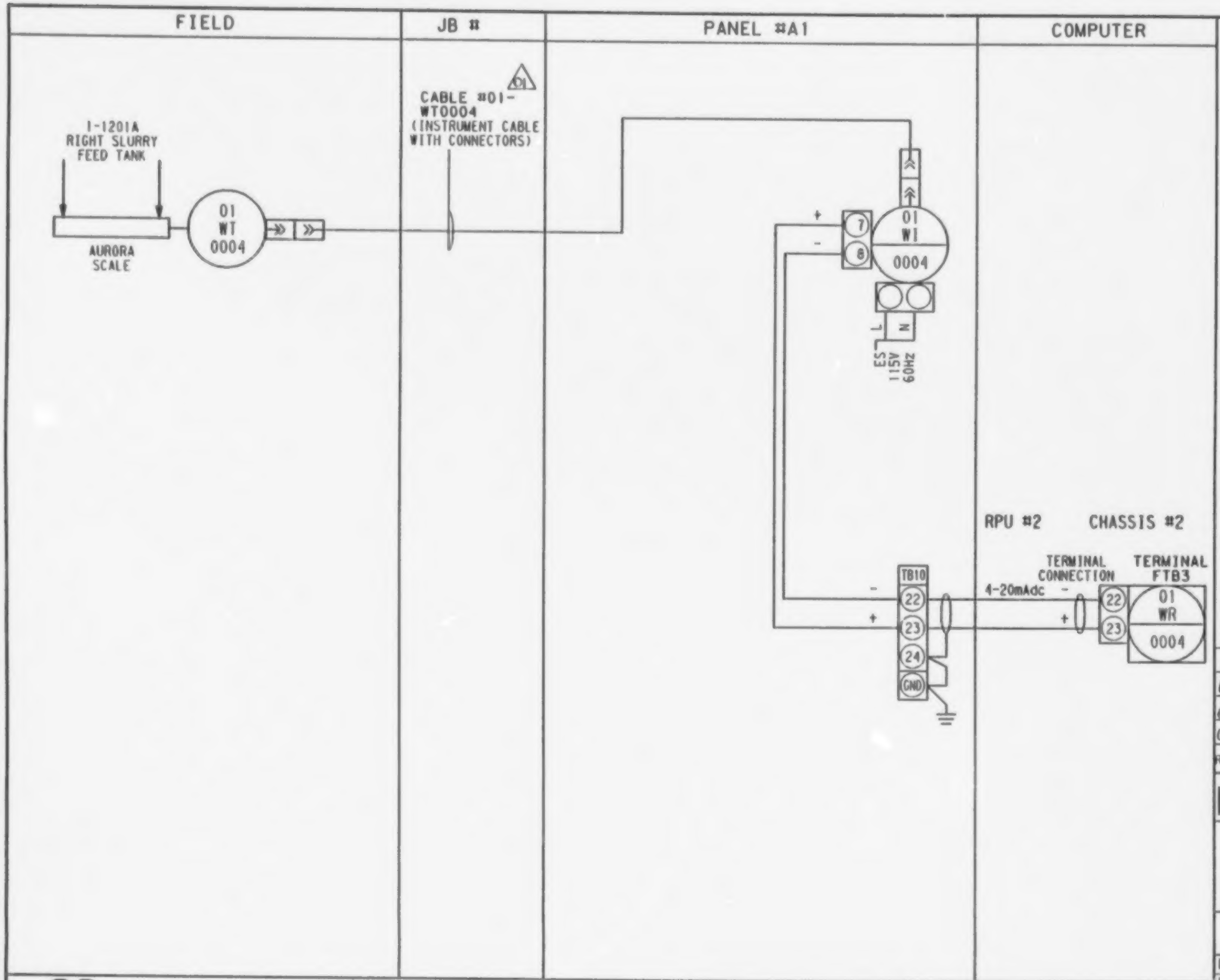

NOTES:

GENERAL NOTES:

A. 24 VAC Power Supply from GFC, Hammond Series Power Supply in panel.

B. 4-20mA signals to computer are shunted by EMR with a resistor to provide voltage signal to computer card.

C. Compatibility of voltage signals to computer programmed by EMR.

REV	DATE	DESCRIPTION	CHK	MEC APP	EMR APP
02	86.09	PH.1 FINAL		RPW	
01	85.07.30	CABLE # ADDED	RPW		
00	85.07.15	FOR EMR APPROVAL	RPW		✓

Energy, Mines and Resources Canada — Énergie, Mines et Ressources Canada

LOOP DIAGRAM
01-W-0004
AREA 1
SLURRY FEED SYSTEM

EMR COPROCESSING PILOT PLANT
PP3

PID No.	D-3-1 -MP-1	
DRAWN	CAD	DATE 85.05.15
CHKD		REV
DESIGN		02

Monenco Consultants Limited

WORK ORDER No. DSS 8279-3

REG. No. 204091

LOOP7

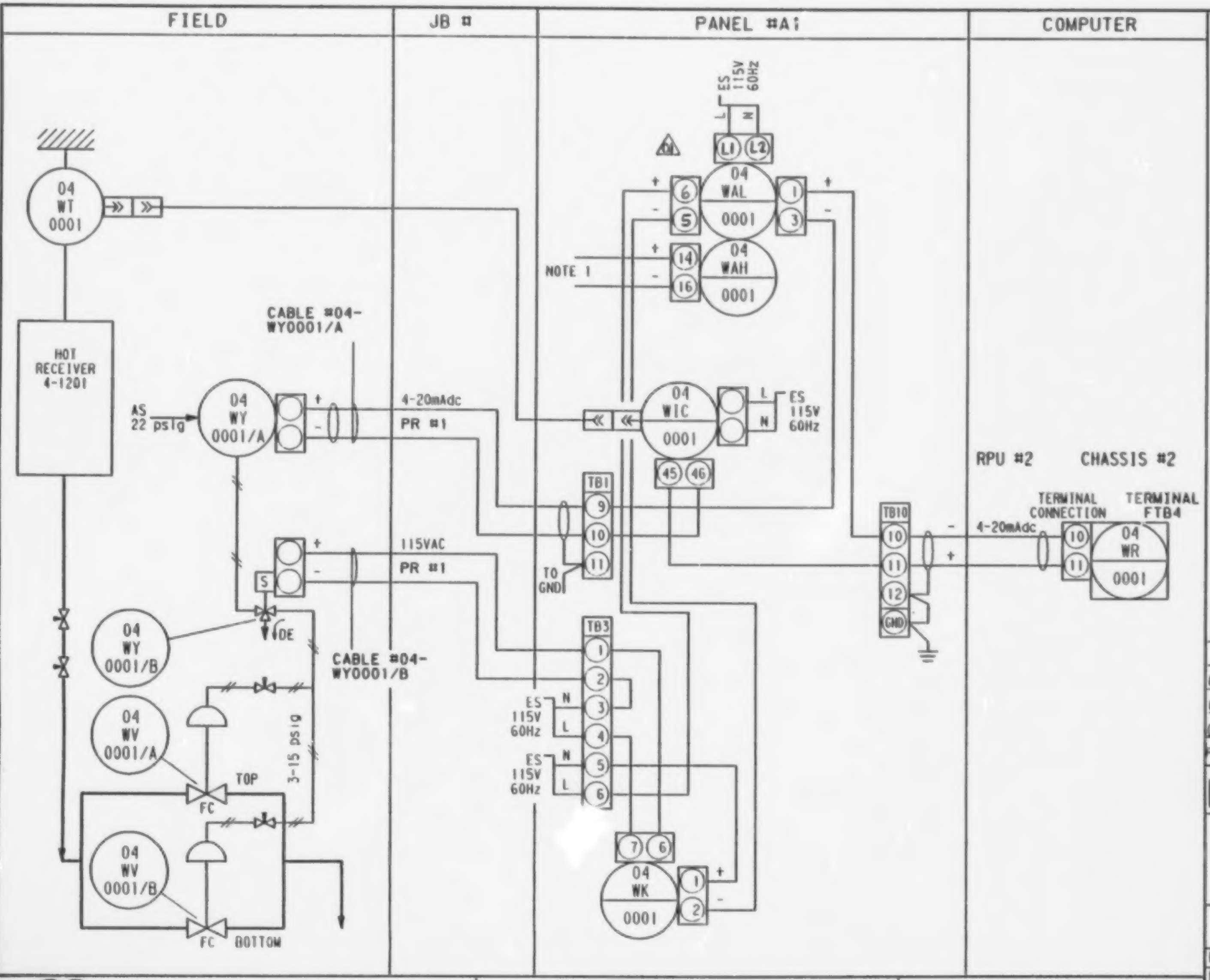

NOTES:
1. WIRED TO COMMON PANEL ALARM.

GENERAL NOTES:

A. 24 VAC Power Supply from GFC, Hammond Series Power Supply in panel.

B. 4-20mA signals to computer are shunted by EMR with a resistor to provide voltage signal to computer card.

C. Compatibility of voltage signals to computer programmed by EMR.

REV	DATE	DESCRIPTION	CHK	MEC APP	EMR APP
02	86.09	PH.4 FINAL			
01	86.08.21	HI/LO ALARM TERMINALS			
00	86.07.15	FOR EMR APPROVAL			✓

Energy, Mines and Resources Canada — Énergie, Mines et Ressources Canada

LOOP DIAGRAM
04-W-0001
AREA 4
HEAVY OIL SYSTEM

EMR COPROCESSING PILOT PLANT
PP3

PID No.	D-3-4 -MP-1		
DRAWN	CAD	DATE	86.05.15
CHKD			REV
DESIGN			02

Monenco Consultants Limited

WORK ORDER No. DSS 8279-3

REG. No. 204094

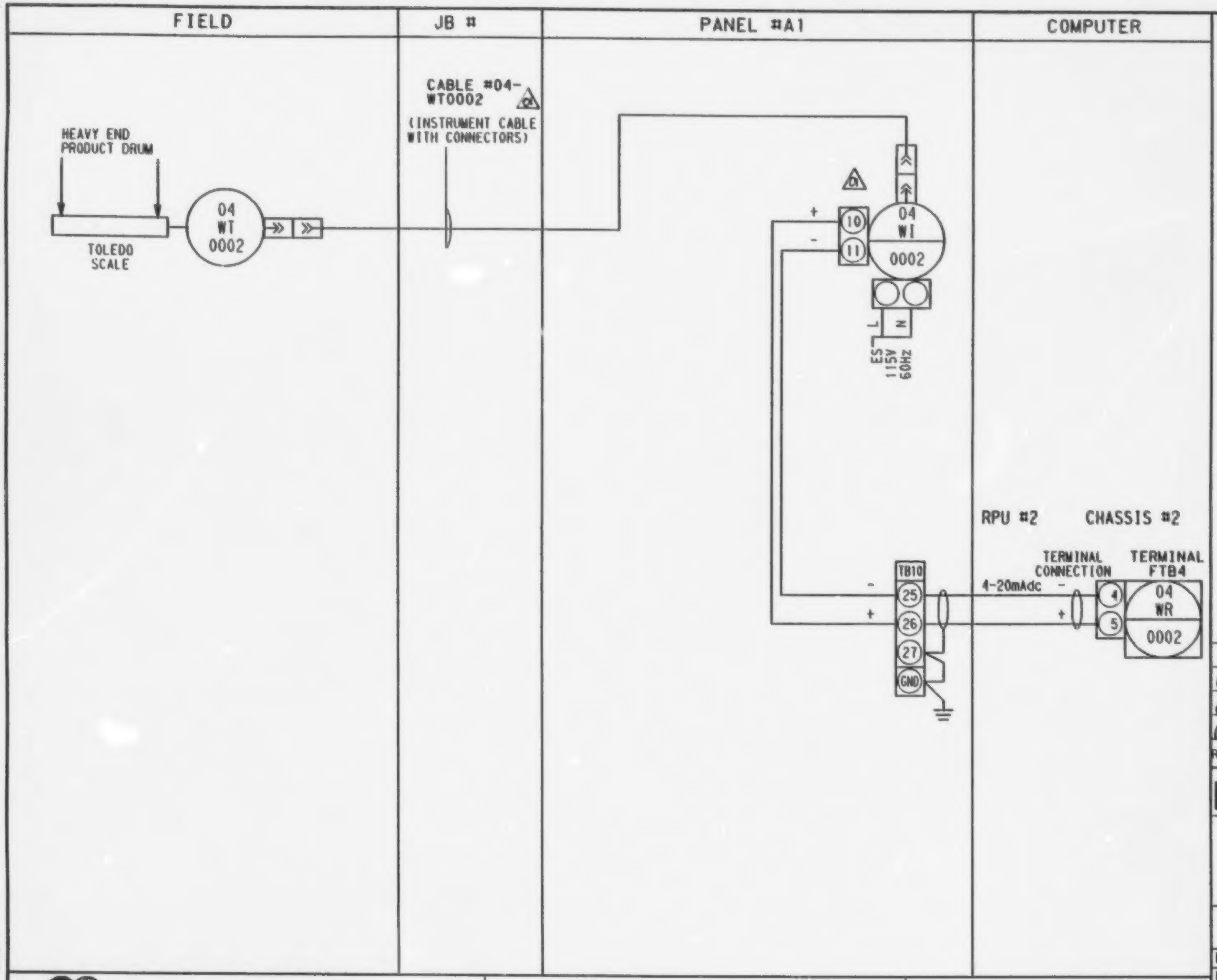

NOTES:

GENERAL NOTES:

A. 24 VAC Power Supply from GFC, Hammond Series Power Supply in panel.

B. 4-20mA signals to computer are shunted by EMR with a resistor to provide voltage signal to computer card.

C. Compatibility of voltage signals to computer programmed by EMR.

REV	DATE	DESCRIPTION	CHK	MEC APP	EMR APP
02	86.09	PH.I FINAL			
01	86.07.30	CABLE # AND TERM. # REVISED	RAW		
00	86.07.15	FOR EMR APPROVAL	RPW		✓

Energy, Mines and Resources Canada — Énergie, Mines et Ressources Canada

LOOP DIAGRAM
04-W-0002
AREA 4
HEAVY OIL SYSTEM

EMR COPROCESSING PILOT PLANT
PP3

PID No.	D-3-4 -MP-1		
DRAWN	CAD	DATE	86.06.27
CHKD			REV
DESIGN			02

Monenco Consultants Limited | WORK ORDER No. DSS 8279-3 | REG. No. 204092

LOOP7

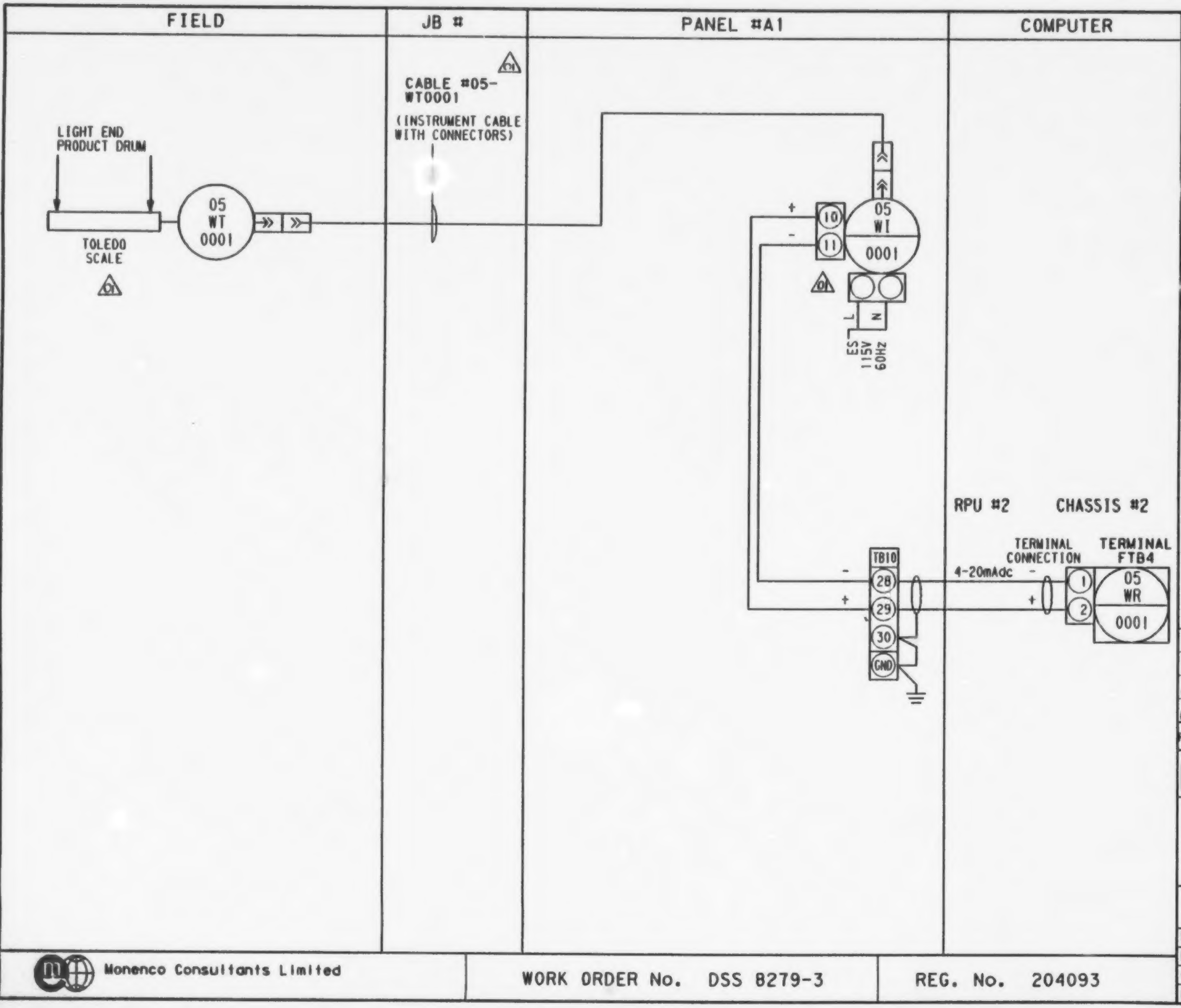

NOTES:

GENERAL NOTES:

A. 24 VAC Power Supply from GFC, Hammond Series Power Supply in panel.

B. 4-20mA signals to computer are shunted by EMR with a resistor to provide voltage signal to computer card.

C. Compatibility of voltage signals to computer programmed by EMR.

REV	DATE	DESCRIPTION	CHK	MEC APP	EMR APP
02	86.09	PH.1 FINAL			
01	86.07.30	CABLE #, TERM. # AND MANUFACTURER REVISED			
00	86.07.15	FOR EMR APPROVAL	RPW		✓

Energy, Mines and Resources Canada / Énergie, Mines et Ressources Canada

LOOP DIAGRAM
05-W-0001
AREA 5
LIGHT OIL SYSTEM

EMR COPROCESSING PILOT PLANT
PP3

PID No. D-3-5 -MP-1
DRAWN | CAD | DATE
CHKD
DESIGN
REV 02

Monenco Consultants Limited | WORK ORDER No. DSS 8279-3 | REG. No. 204093

LOOP7

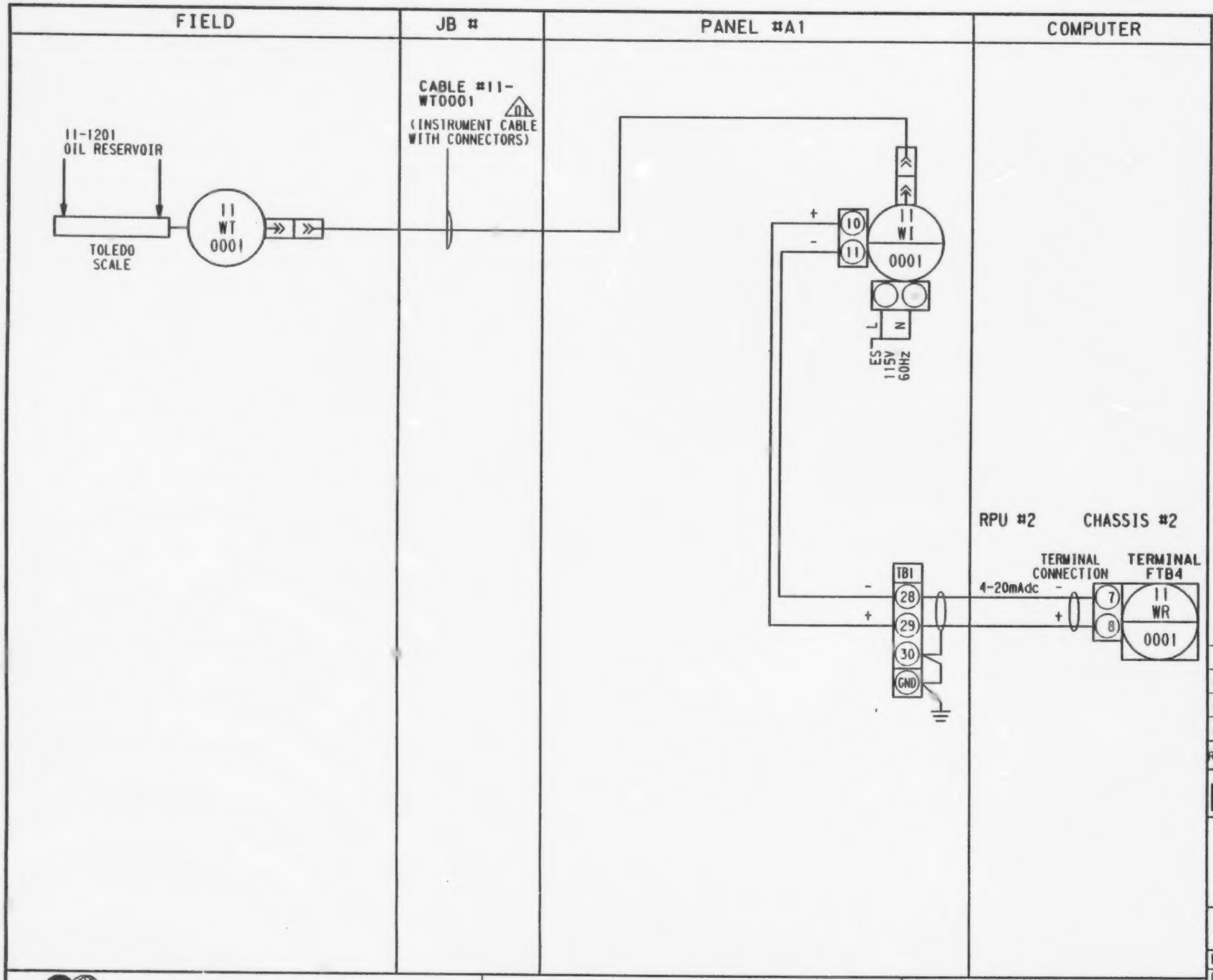

NOTES:

GENERAL NOTES:

A. 24 VAC Power Supply from GFC, Hammond Series Power Supply in panel.

B. 4-20mA signals to computer are shunted by EMR with a resistor to provide voltage signal to computer card.

C. Compatibility of voltage signals to computer programmed by EMR.

REV	DATE	DESCRIPTION	CHK	MEC APP	EMR APP
02	86.09	PH.1 FINAL	CP	RJ	
01	07 86.30	CABLE#ADDED	RW		
00	07 86.15	FOR EMR APPROVAL	RW		✓

Energy, Mines and Resources Canada / Énergie, Mines et Ressources Canada

LOOP DIAGRAM
11-W-0001
AREA 11
OIL & VARSOL PURGE SYSTEM

EMR COPROCESSING PILOT PLANT
PP3

PID No.	D-3-11-MP-1	
DRAWN	CAD	DATE
CHKD		REV
DESIGN		02

LOOP7

Monenco Consultants Limited | WORK ORDER No. DSS 8279-3 | REG. No. 204095

B

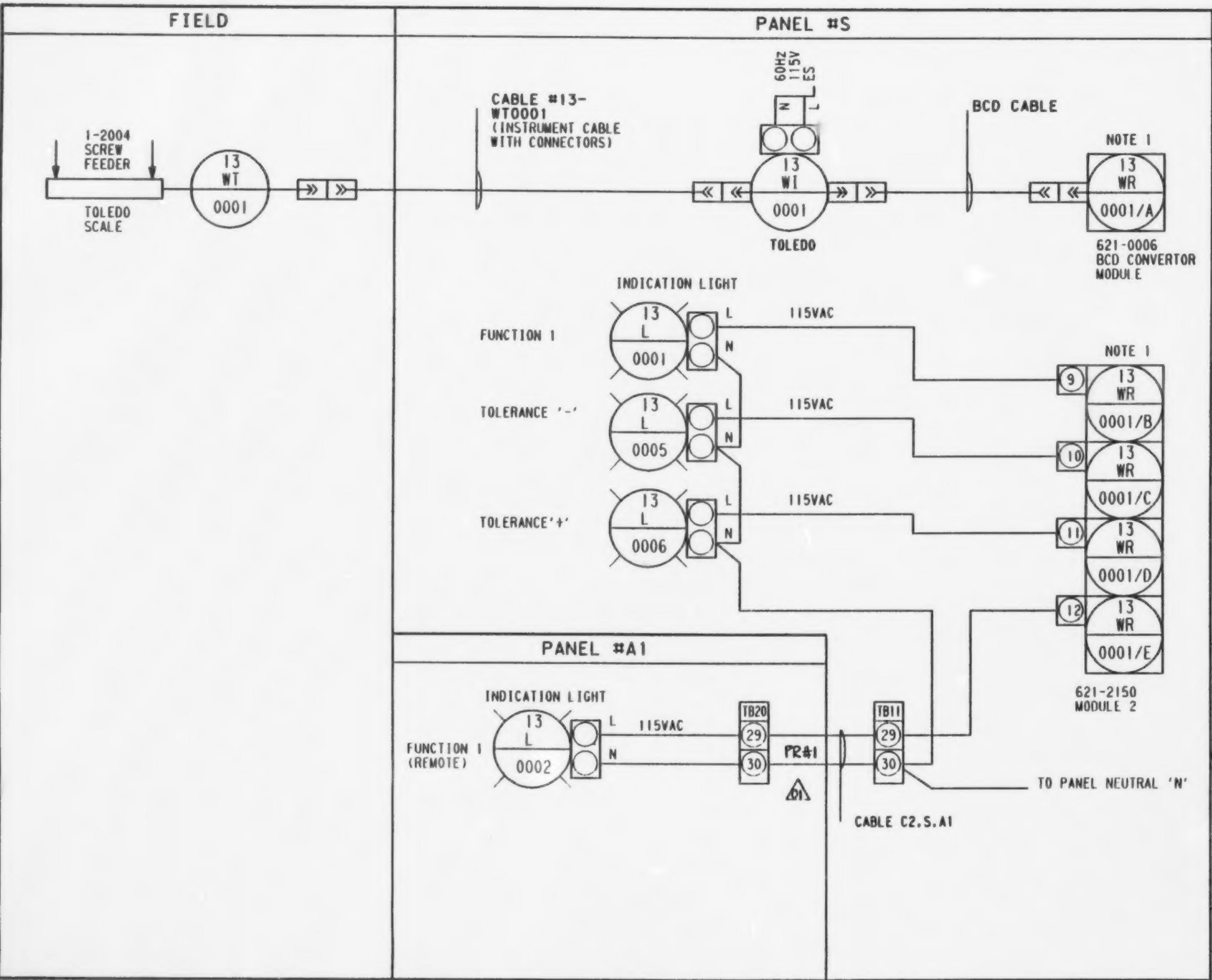

NOTES:

1. HONEYWELL PLC MODEL IPC 620-10.

GENERAL NOTES:

A. 24 VAC Power Supply from GFC, Hammond Series Power Supply in panel.

B. 4-20mA signals to computer are shunted by EMR with a resistor to provide voltage signal to computer card.

C. Compatibility of voltage signals to computer programmed by EMR.

REV	DATE	DESCRIPTION	CHK	MEC APP	EMR APP
02	86.09	PH.1 FINAL	✓	RW	
01	86.08.22	CABLE PAIR # ADDED	✓		
00	86.08.7	FOR EMR APPROVAL	RW		✓

Energy, Mines and Resources Canada — Énergie, Mines et Ressources Canada

LOOP DIAGRAM
13-W-0001
AREA 13
SLURRY FEED SYSTEM

EMR COPROCESSING PILOT PLANT
PP3

PID No.	D-3-13-MP-1		
DRAWN	CAD	DATE	86.08.7
CHKD		REV	02
DESIGN			

Monenco Consultants Limited

WORK ORDER No. DSS 8279-3

REG. No. 204096

LOOP

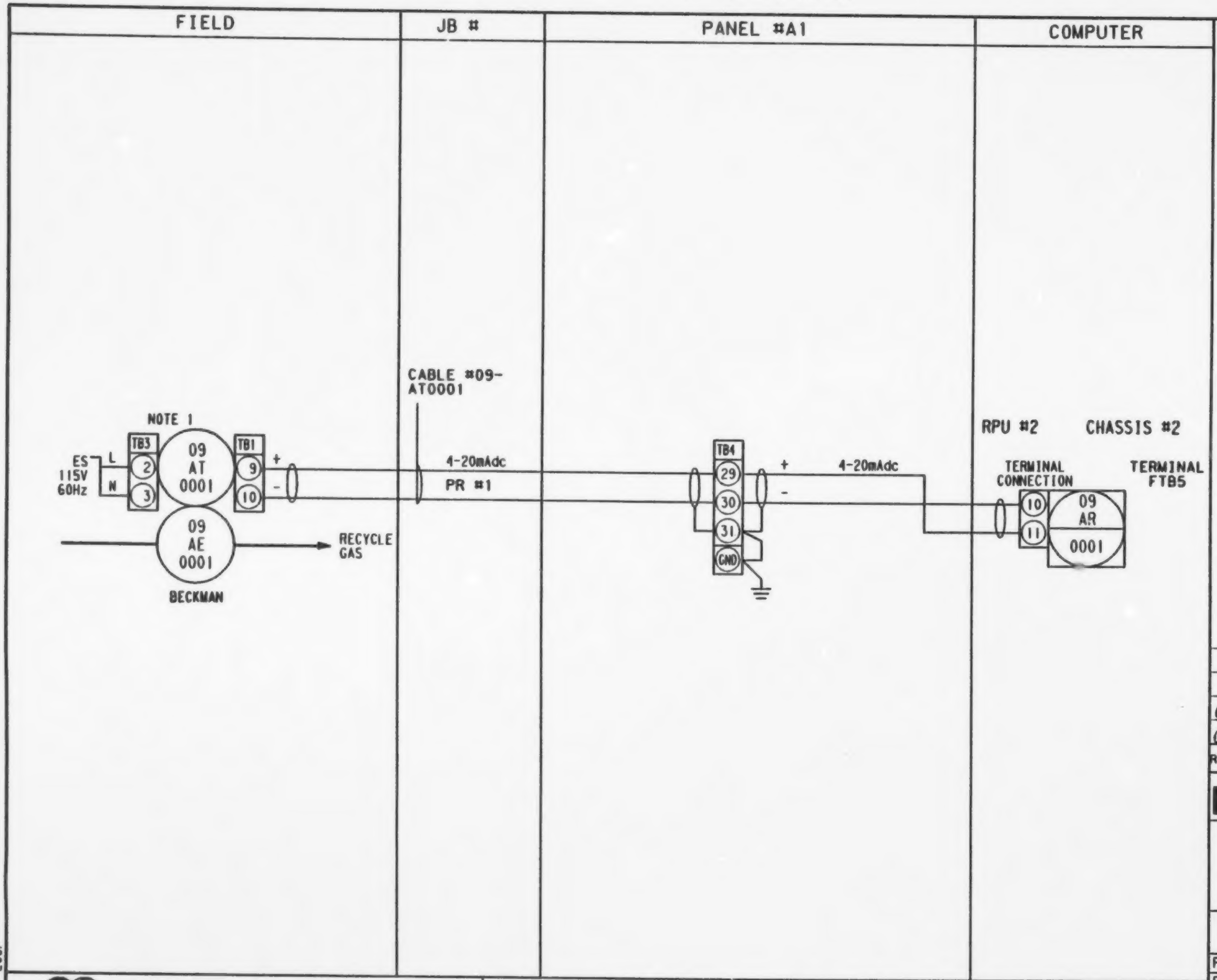

NOTES:

1. (A) NORM/LIN JUMPER TO BE IN "NORM" POSITION.

   (B) OUTPUT SELECTION SWITCHES (CONTACTS) TO BE SET AS FOLLOWS:

1	OFF
2	ON
3	OFF
4	OFF
5	OFF
6	OFF
7	OFF

   (C) ON CURRENT OUTPUT BOARD PUT SLIDE SWITCH S1 IN 4-20mA POSITION.

GENERAL NOTES:

A. 24 VAC Power Supply from GFC, Hammond Series Power Supply in panel.

B. 4-20mA signals to computer are shunted by EMR with a resistor to provide voltage signal to computer card.

C. Compatibility of voltage signals to computer programmed by EMR.

REV	DATE	DESCRIPTION	CHK	MEC APP	EMR APP
01	86.09	PH.1 FINAL	VP	RAJ	
00	86.07.15	FOR EMR APPROVAL	RAJ		✓

Energy, Mines and Resources Canada — Énergie, Mines et Ressources Canada

LOOP DIAGRAM
09-A-0001
AREA 1
OFF GAS SYSTEM

EMR COPROCESSING PILOT PLANT
PP3

PID No.	D-3-9 -MP-1		
DRAWN	CAD	DATE	86.07.03
CHKD			REV
DESIGN			01

LOOP

Monenco Consultants Limited

WORK ORDER No. DSS 8279-3

REG. No. 204155

B

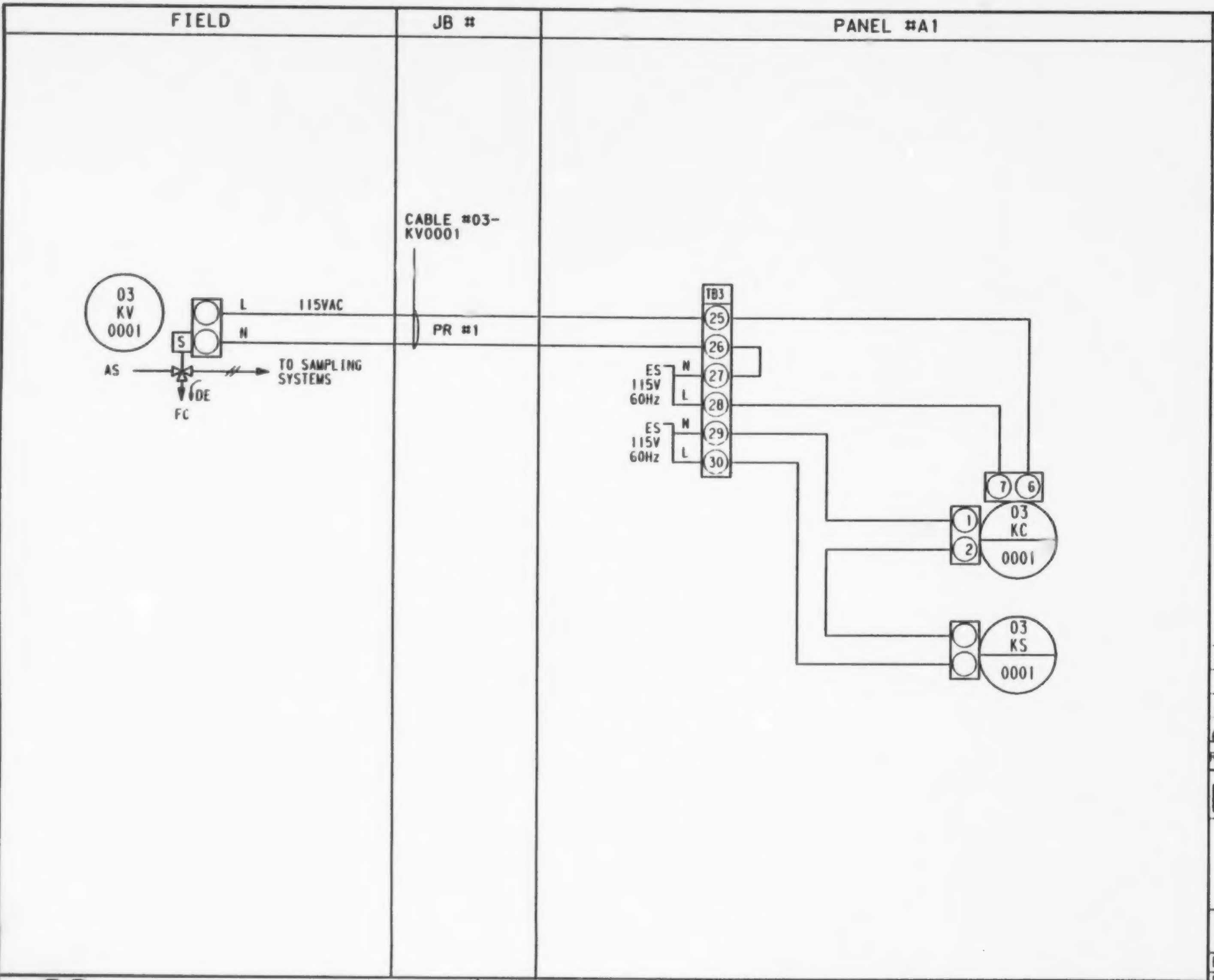

NOTES:

GENERAL NOTES:

A. 24 VAC Power Supply from GFC, Hammond Series Power Supply in panel.

B. 4-20mA signals to computer are shunted by EMR with a resistor to provide voltage signal to computer card.

C. Compatibility of voltage signals to computer programmed by EMR.

REV	DATE	DESCRIPTION	CHK	MEC APP	EMR APP
01	86.09	PH.I FINAL			
00	86.07.15	FOR EMR APPROVAL			✓

Energy, Mines and Resources Canada / Énergie, Mines et Ressources Canada

LOOP DIAGRAM
03-K-0001
AREA 3
REACTOR AND SAMPLING SYSTEM

EMR COPROCESSING PILOT PLANT
PP3

PID No.	D-3-3 -MP-1		
DRAWN	CAD	DATE	86.06.27
CHKD			REV
DESIGN			01

Monenco Consultants Limited | WORK ORDER No. DSS 8279-3 | REG. No. 204089

LOOP

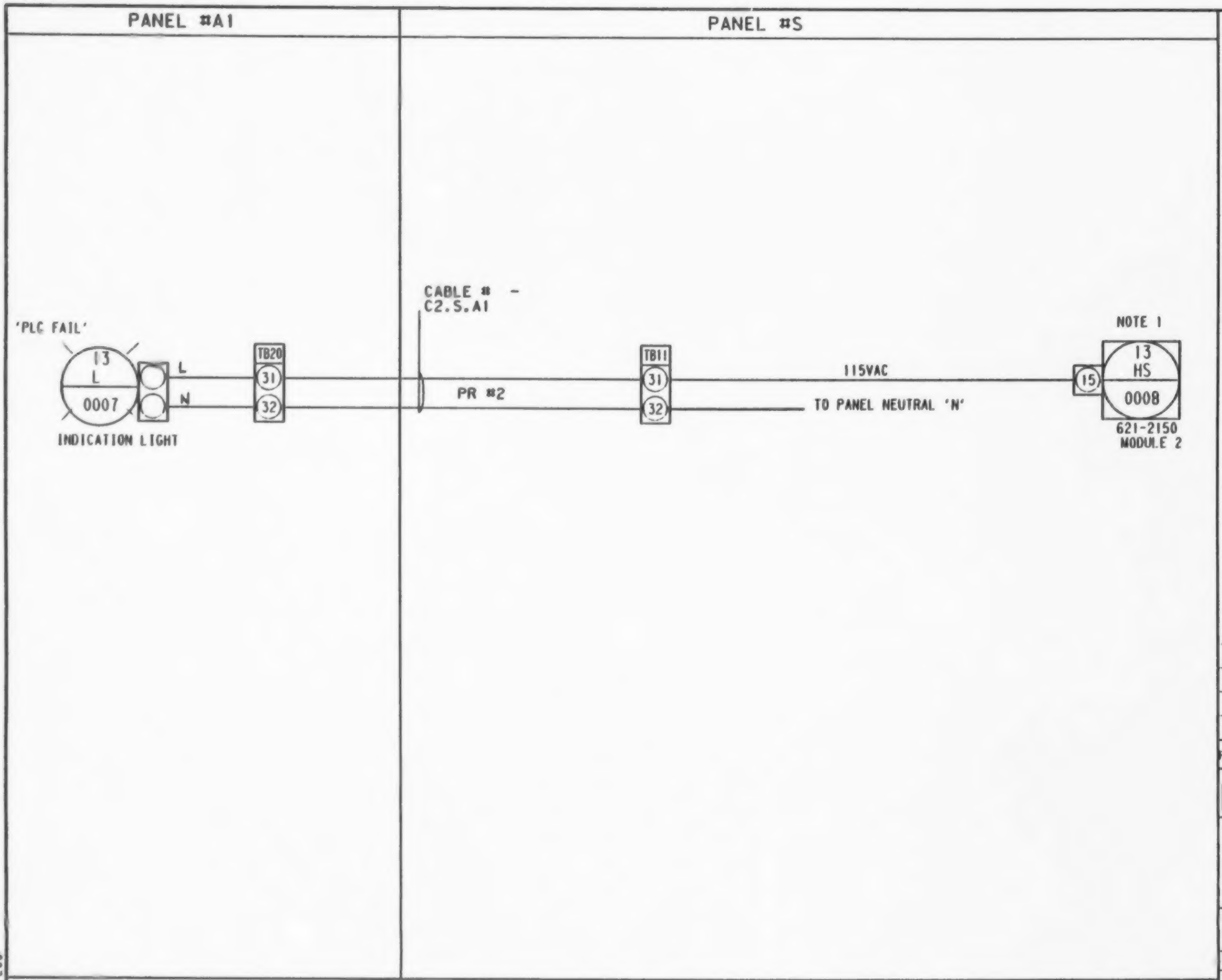

NOTES:
1. HONEYWELL PLC MODEL IPC 620-10.

GENERAL NOTES:

A. 24 VAC Power Supply from GFC, Hammond Series Power Supply in panel.

B. 4-20mA signals to computer are shunted by EMR with a resistor to provide voltage signal to computer card.

C. Compatibility of voltage signals to computer programmed by EMR.

REV	DATE	DESCRIPTION	CHK	MFC APP	EMR APP
00	86.09	PH.4 FINAL	CP	RAJ	

Energy, Mines and Resources Canada — Énergie, Mines et Ressources Canada

LOOP DIAGRAM
13-QL-0007
AREA 13
SLURRY FEED SYSTEM

EMR COPROCESSING PILOT PLANT
PP3

PID No.	D-3-13-MP-1		
DRAWN	CAD	DATE	86.08.19
CHKD			REV
DESIGN			00

Monenco Consultants Limited | WORK ORDER No. DSS 8279-3 | REG. No. 204032

LOOP
B

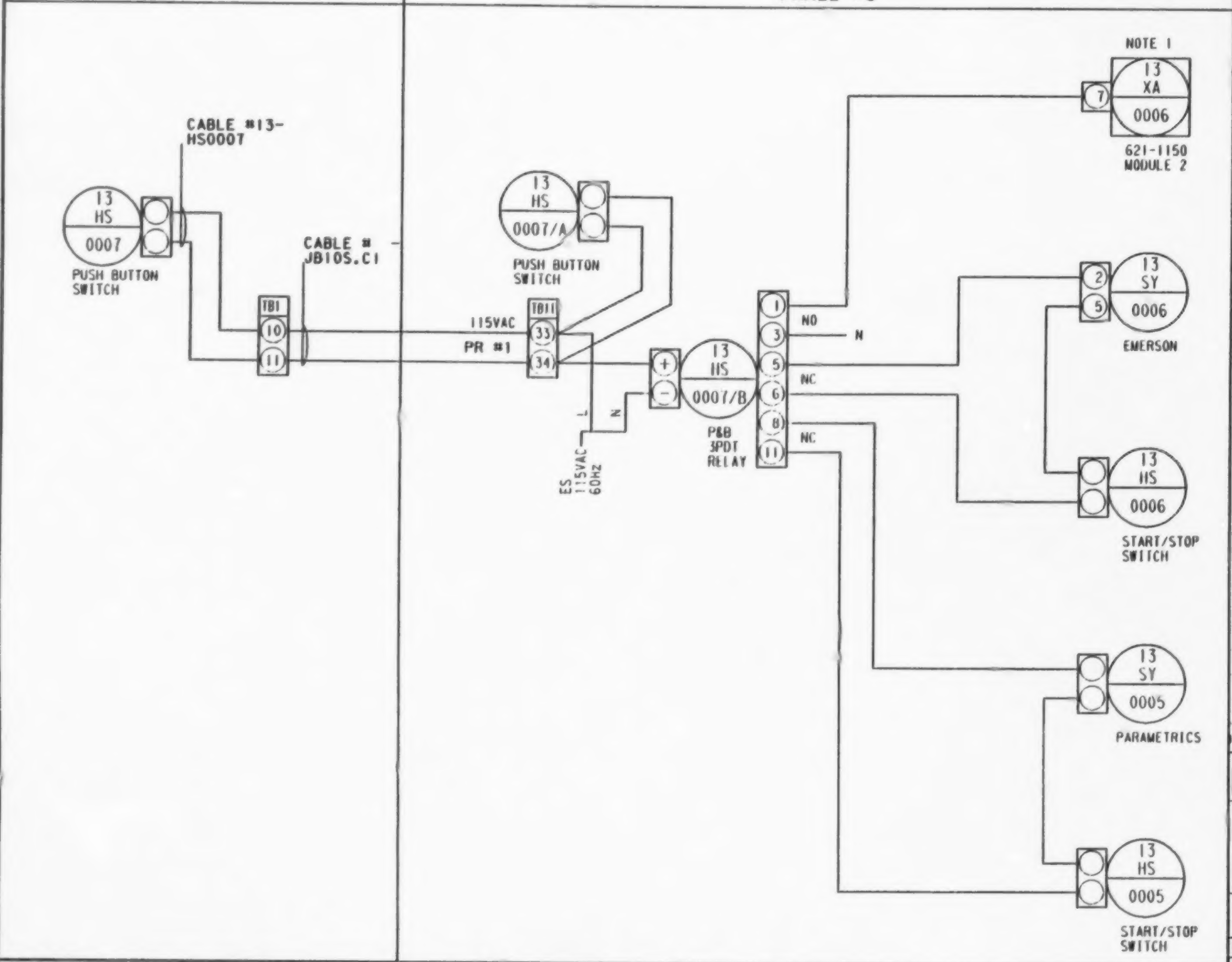

NOTES:

1. HONEYWELL PLC MODEL IPC 620-10.

GENERAL NOTES:

A. 24 VAC Power Supply from GFC, Hammond Series Power Supply in panel.

B. 4-20mA signals to computer are shunted by EMR with a resistor to provide voltage signal to computer card.

C. Compatibility of voltage signals to computer programmed by EMR.

REV	DATE	DESCRIPTION	CHK	MEC APP	EMR APP
00	86.01	PH.1 FINAL	CP	[signature]	

Energy, Mines and Resources Canada — Énergie, Mines et Ressources Canada

LOOP DIAGRAM
13-X-0006
AREA 13
SLURRY FEED SYSTEM

EMR COPROCESSING PILOT PLANT
PP3

PID No.	D-3-13-MP-1		
DRAWN	CAD	DATE	86.08.19
CHKD			REV
DESIGN			00

Monenco Consultants Limited

WORK ORDER No. DSS 8279-3

REG. No. 204154

LOOP

SPEED CONTROLLER LOOPS

LOOP NUMBER	REGISTRATION NUMBER	LOOP NUMBER	REGISTRATION NUMBER	LOOP NUMBER	REGISTRATION NUMBER
01-S-0001/0003	204119				
01-S-0002	204120				
01-S-0004	204121				
03-S-0001	204127				
06-S-0001	204128				
07-S-0001	204122				
07-S-0002	204123				
07-S-0003	204124				
08-S-0001	204125				
08-S-0002	204126				

NOTES:

SHIELDING, GROUNDING, CONDUCTOR IDENTIFICATION:

1. MULTICORE TX WIRE TO HAVE INDIVIDUAL PAIR SHIELDS. ALL OTHER SIGNALS UNSHIELDED.
2. ENSURE SHIELD CONTINUITY FROM SOURCE TO RECEIVER THROUGH INTERMEDIATE TERMINALS.
3. GROUND SHIELD AT INSTRUMENT PANEL ONLY. JUMPER ALL SHIELDS PER LOOP. IF RECEIVER AND SOURCE ARE IN FIELD, GROUND SHIELD AT SOURCE INSTRUMENT.
4. INTERNAL WIRING IN PANELS NOT TO BE SHIELDED.
5. ALL OUTER CASES OF INSTRUMENT CASES TO BE GROUNDED.
6. CONDUCTOR IDENTIFICATION:

a) SIGNAL WIRE - CABLE NUMBER TO USE TAG No. OF SOURCE INSTRUMENT PLUS SERIAL No.-1, -2, etc.
b) TX WIRE - USE SIGNAL WIRE DESIGNATION FOR CABLE No. AND PAIR No.

SYMBOLS:

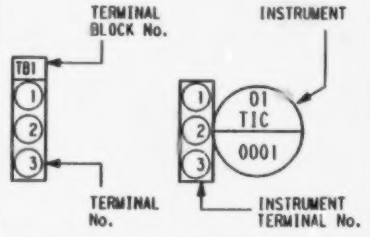

SEE PID, INSTRUMENT SYMBOL SHEET D-1-01-WP-2 FOR INSTRUMENT SYMBOL IDENTIFICATION PER ISA S51.1.

REV	DATE	DESCRIPTION	CHK	MEC APP	EMR APP
01	86.09	ALL FINAL	CP		
00	86.07.15	FOR EMR APPROVAL			✓

Energy, Mines and Resources Canada — Énergie, Mines et Ressources Canada

LIST OF SPEED CONTROLLER LOOPS

INSTRUMENT LOOP DIAGRAM COVER SHEET

EMR COPROCESSING PILOT PLANT PP3

DRAWN | CAD | DATE 86.07.03
CHKD
DESIGN
REV 01

Monenco Consultants Limited

WORK ORDER No. DSS 8279-3

REG. No. 204307

LOOP

B

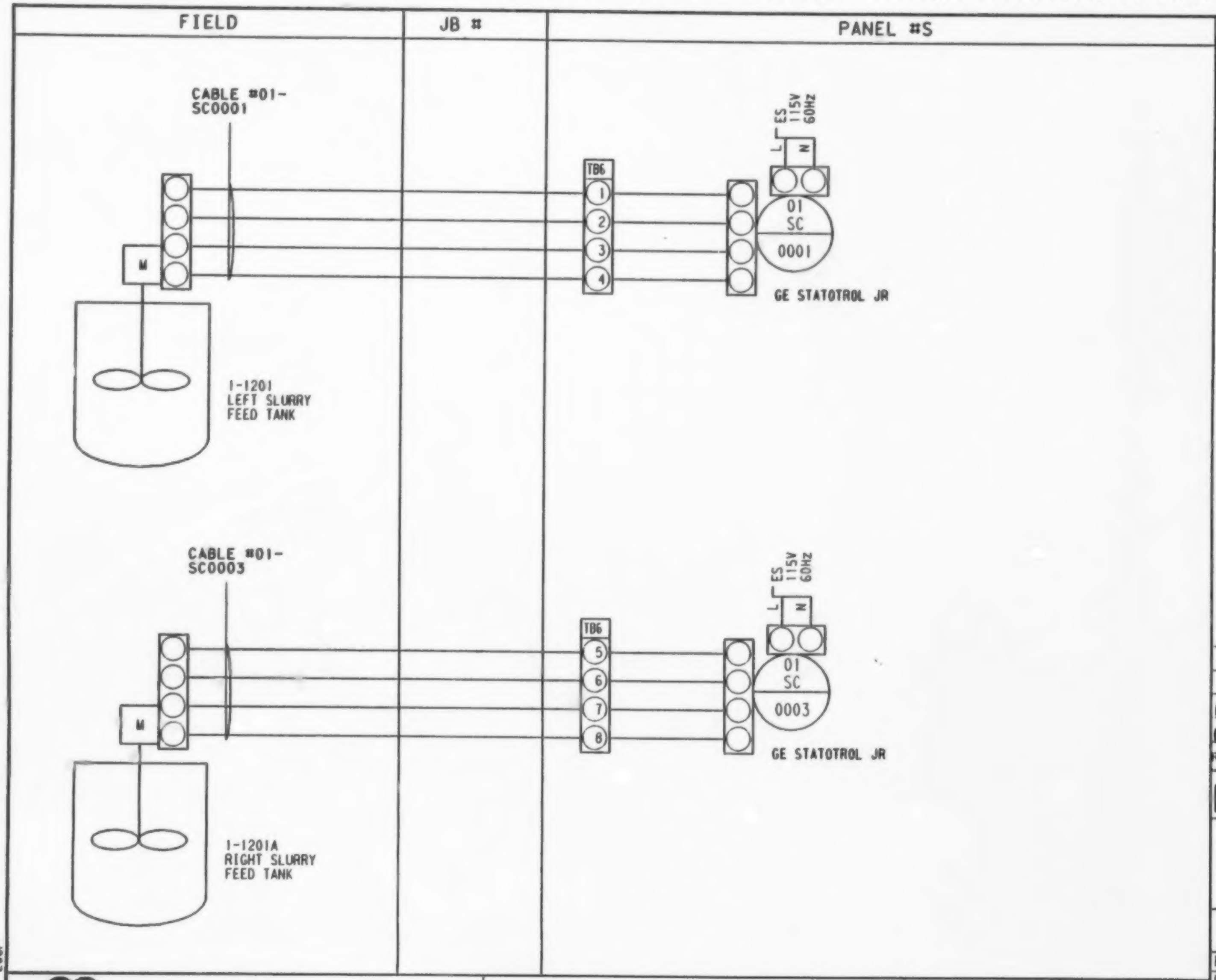

NOTES:

HOLD FOR GE INFORMATION

GENERAL NOTES:

A. 24 VAC Power Supply from GFC, Hammond Series Power Supply in panel.

B. 4-20mA signals to computer are shunted by EMR with a resistor to provide voltage signal to computer card.

C. Compatibility of voltage signals to computer programmed by EMR.

REV	DATE	DESCRIPTION	CHK	MEC APP	EMR APP
01	86.09	A.1 FINAL			
00	86.07.15	FOR EMR APPROVAL			✓

Energy, Mines and Resources Canada — Énergie, Mines et Ressources Canada

LOOP DIAGRAM
01-S-0001/0003
AREA 1
SLURRY FEED SYSTEM

EMR COPROCESSING PILOT PLANT
PP3

PID No.	D-3-1 -MP-1		
DRAWN	CAD	DATE	86.07.03
CHKD			REV 01
DESIGN			

Monenco Consultants Limited

WORK ORDER No. DSS 8279-3

REG. No. 204119

LOOP

B

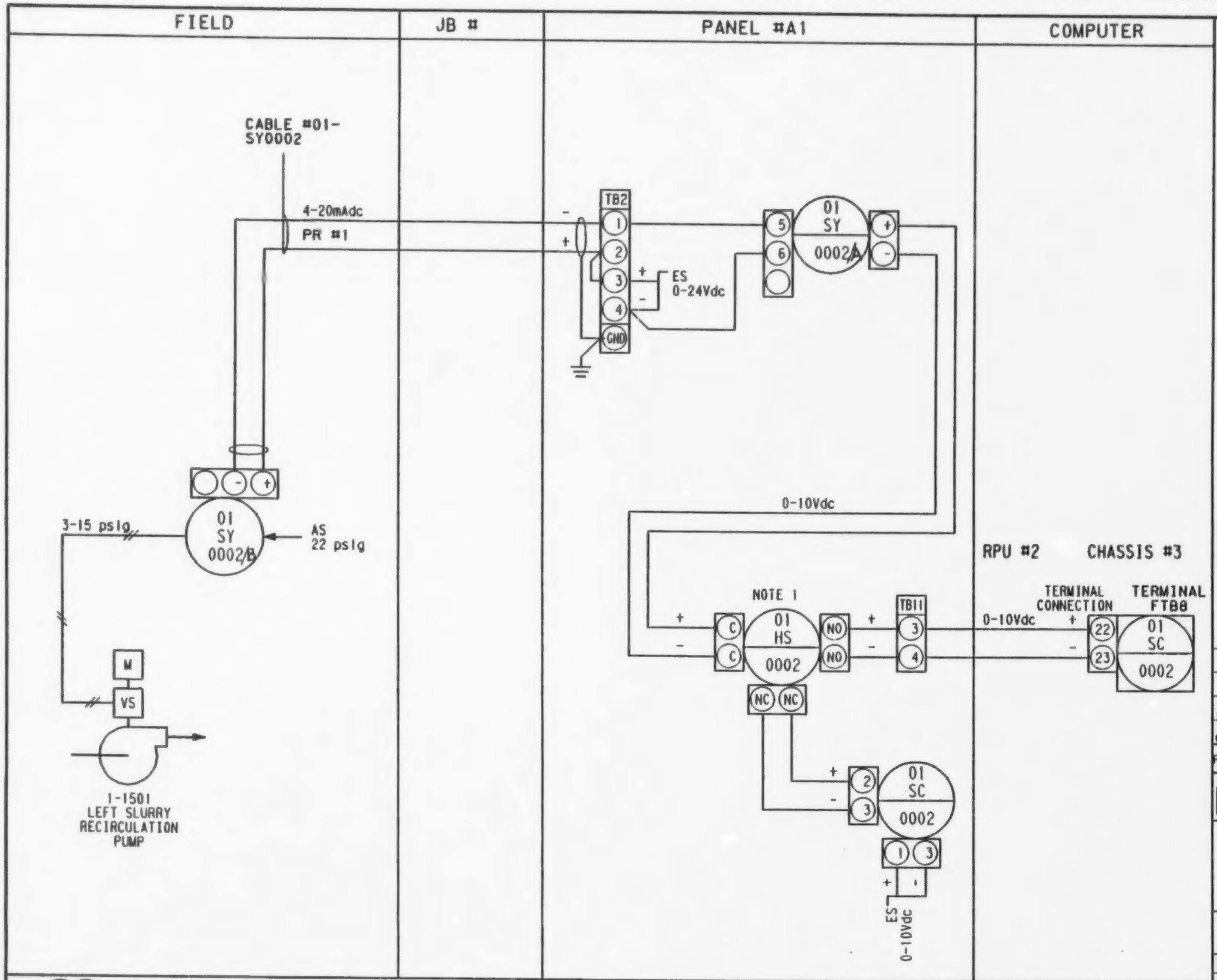

NOTES:

1. HAND SELECTOR POSITIONS

GENERAL NOTES:

A. 24 VAC Power Supply from GFC, Hammond Series Power Supply in panel.

B. 4-20mA signals to computer are shunted by EMR with a resistor to provide voltage signal to computer card.

C. Compatibility of voltage signals to computer programmed by EMR.

REV	DATE	DESCRIPTION	CHK	MEC APP	EMR APP
01	86.09	PH.1 FINAL	cP	RAJ	
00	86.07.15	FOR EMR APPROVAL	RAJ		✓

Energy, Mines and Resources Canada — Énergie, Mines et Ressources Canada

LOOP DIAGRAM
01-S-0002
AREA 1
SLURRY FEED SYSTEM

EMR COPROCESSING PILOT PLANT PP3

PID No.	D-3-1 -MP-1		
DRAWN	CAD	DATE	86.05.15
CHKD			REV 01
DESIGN			

Monenco Consultants Limited | WORK ORDER No. DSS 8279-3 | REG. No. 204120

LOOP6

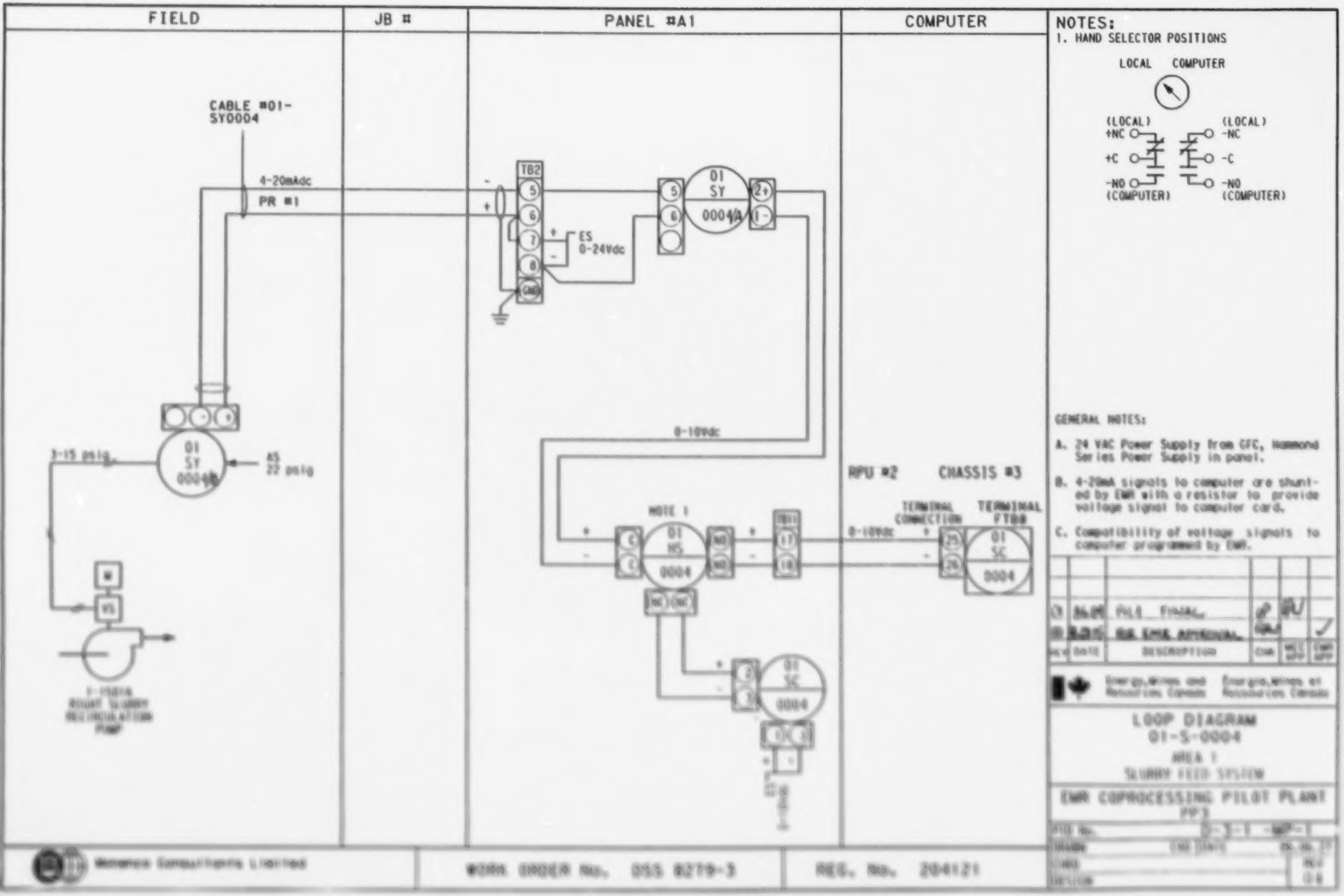
FIELD
JB #
PANEL #A1
COMPUTER
CABLE #01-SY0004
4-20mAdc
PR #1
01 SY 0004
3-15 psig
AS 22 psig
VS
TB2
ES 0-24Vdc
01 SY 0004A
0-10Vdc
NOTE 1
01 HS 0004
TB11
01 SC 0004
RPU #2
CHASSIS #3
TERMINAL CONNECTION
TERMINAL FT08
NOTES:
1. HAND SELECTOR POSITIONS
LOCAL COMPUTER
(LOCAL) +NC
+C
-NO (COMPUTER)
(LOCAL) -NC
-C
-NO (COMPUTER)
GENERAL NOTES:
A. 24 VAC Power Supply from CFC, Hammond Series Power Supply in panel.
B. 4-20mA signals to computer are shunted by EMR with a resistor to provide voltage signal to computer card.
C. Compatibility of voltage signals to computer programmed by EMR.
FILE FINAL
FOR EMR APPROVAL
DATE
DESCRIPTION
Energy, Mines and Resources Canada
Énergie, Mines et Ressources Canada
LOOP DIAGRAM
01-S-0004
AREA 1
SLURRY FEED SYSTEM
EMR COPROCESSING PILOT PLANT
WORK ORDER No. DSS 8279-3
REG. No. 204121

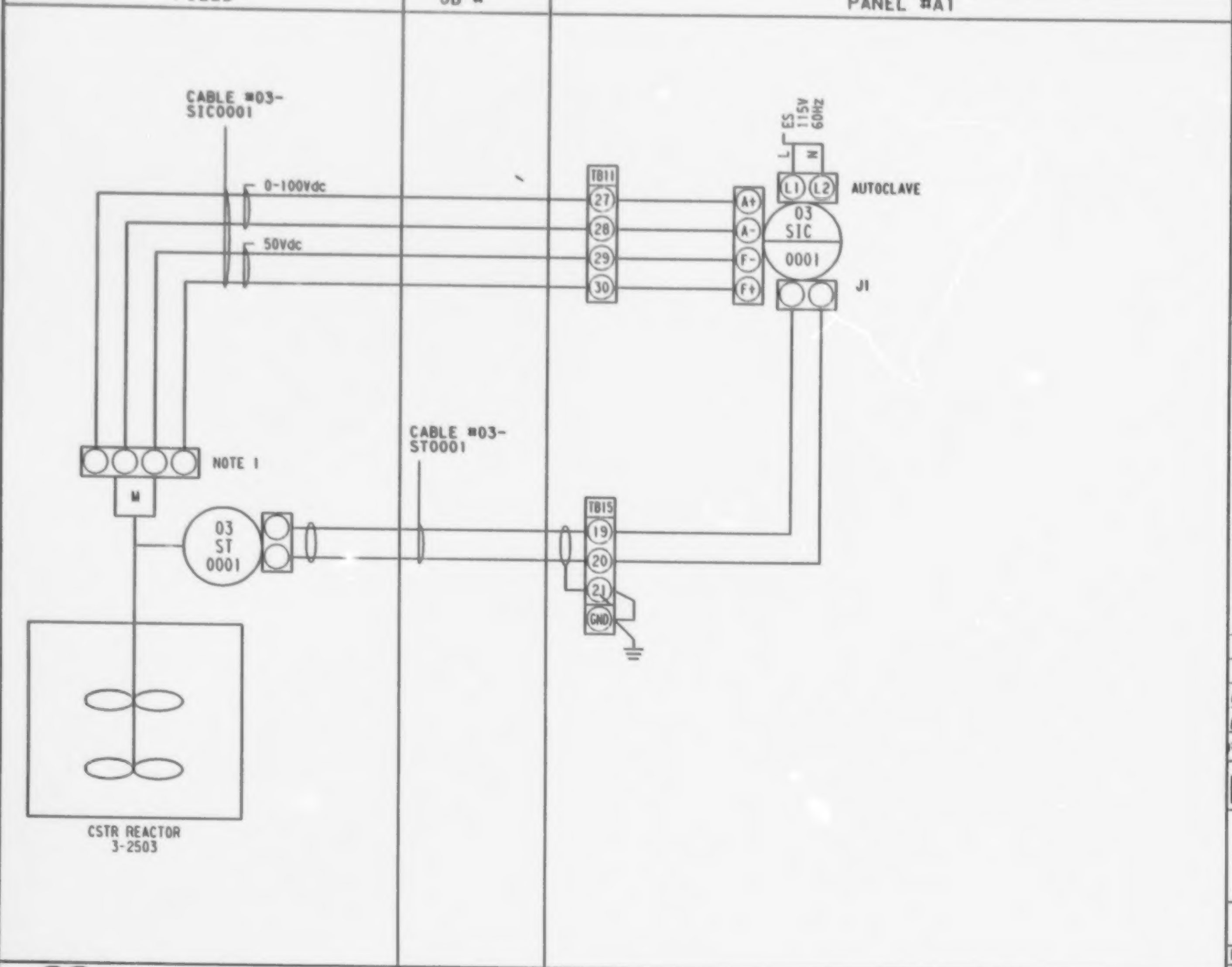

NOTES:

1. FOR PERMANENT MAGNET MOTORS, THE FIELD TERMINALS IN 03SIC0001 ARE NOT USED AND SHOULD BE DISCONNECTED AND TAPED AT CONTROLLER.

GENERAL NOTES:

A. 24 VAC Power Supply from GFC, Hammond Series Power Supply in panel.

B. 4-20mA signals to computer are shunted by EMR with a resistor to provide voltage signal to computer card.

C. Compatibility of voltage signals to computer programmed by EMR.

REV	DATE	DESCRIPTION	CHK	MEC APP	EMR APP
01	86.09	PH.I FINAL			
00	86.07.15	FOR EMR APPROVAL			✓

Energy, Mines and Resources Canada / Énergie, Mines et Ressources Canada

LOOP DIAGRAM
03-S-0001
AREA 3
REACTOR AND SAMPLING SYSTEM

EMR COPROCESSING PILOT PLANT PP3

PID No.	D-3-3 -MP-2
DRAWN	CAD DATE 86.07.03
CHKD	REV 01
DESIGN	

Monenco Consultants Limited

WORK ORDER No. DSS 8279-3

REG. No. 204127

LOOP B

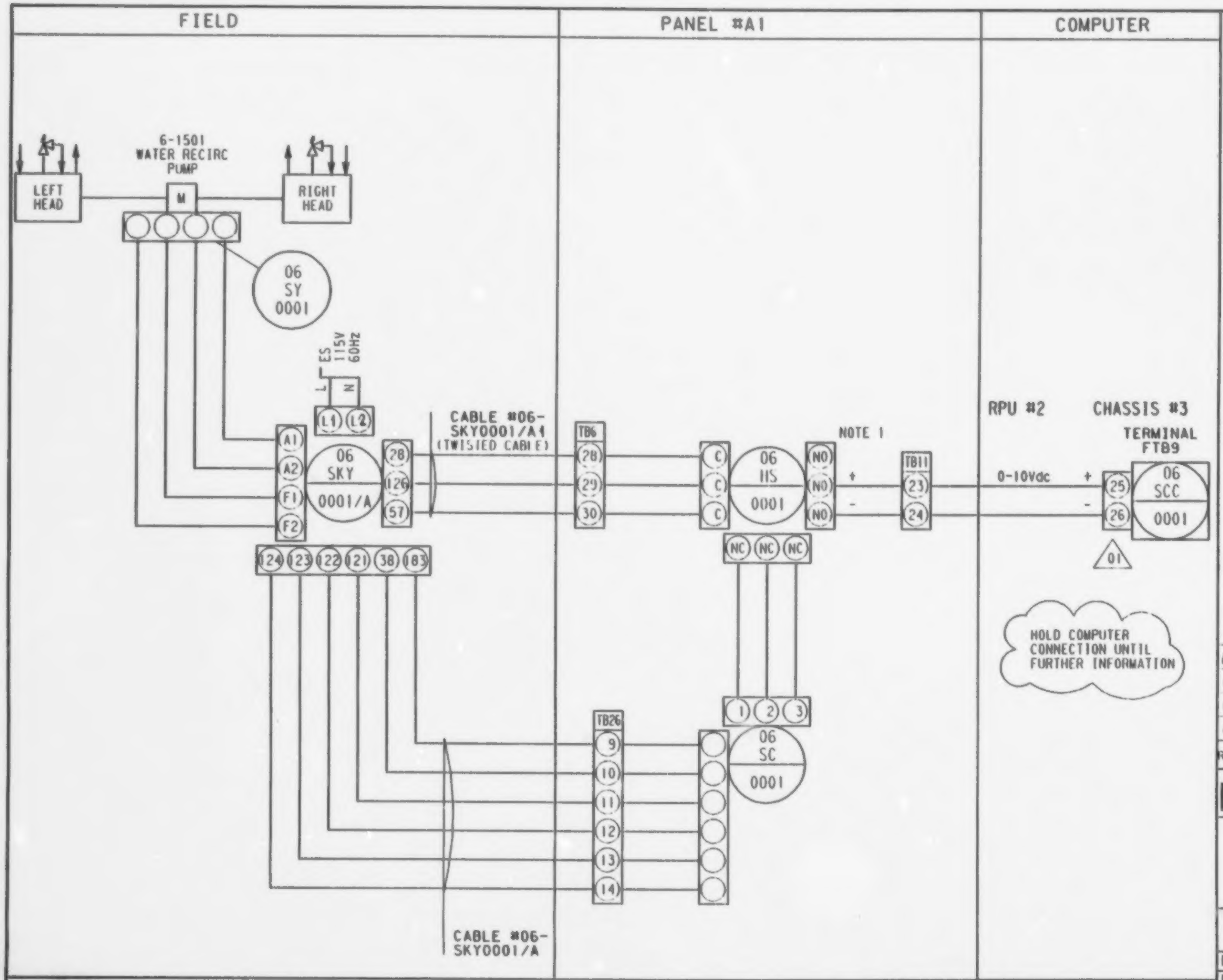

NOTES:
1. SELECTOR SWITCH POSITIONS:

LOCAL COMPUTER

(LOCAL) +NC, +C, -NO (COMPUTER) — (LOCAL) -NC, -C, -NO (COMPUTER)

(LOCAL) +NC, +C, -NO (COMPUTER)

GENERAL NOTES:

A. 24 VAC Power Supply from GFC, Hammond Series Power Supply in panel.

B. 4-20mA signals to computer are shunted by EMR with a resistor to provide voltage signal to computer card.

C. Compatibility of voltage signals to computer programmed by EMR.

REV	DATE	DESCRIPTION	CHK	MEC APP	EMR APP
03	86.09	PH.4 FINAL	CP		
02	08 86.26	LOOP RE-DRAWN	CP		
01	07 86.29	TERMINAL #'S ADDED	RW		
00	07 86.15	FOR EMR APPROVAL	RW		✓

Energy, Mines and Resources Canada — Énergie, Mines et Ressources Canada

LOOP DIAGRAM
06-S-0001
AREA 6
WATER SCRUBBER SYSTEM

EMR COPROCESSING PILOT PLANT
PP3

PID No.	D-3-6 -MP-1		
DRAWN		DATE	86.09.16
CHKD		REV	03
DESIGN			

Monenco Consultants Limited

WORK ORDER No. DSS 8279-3

REG. No. 204128

LOOP8

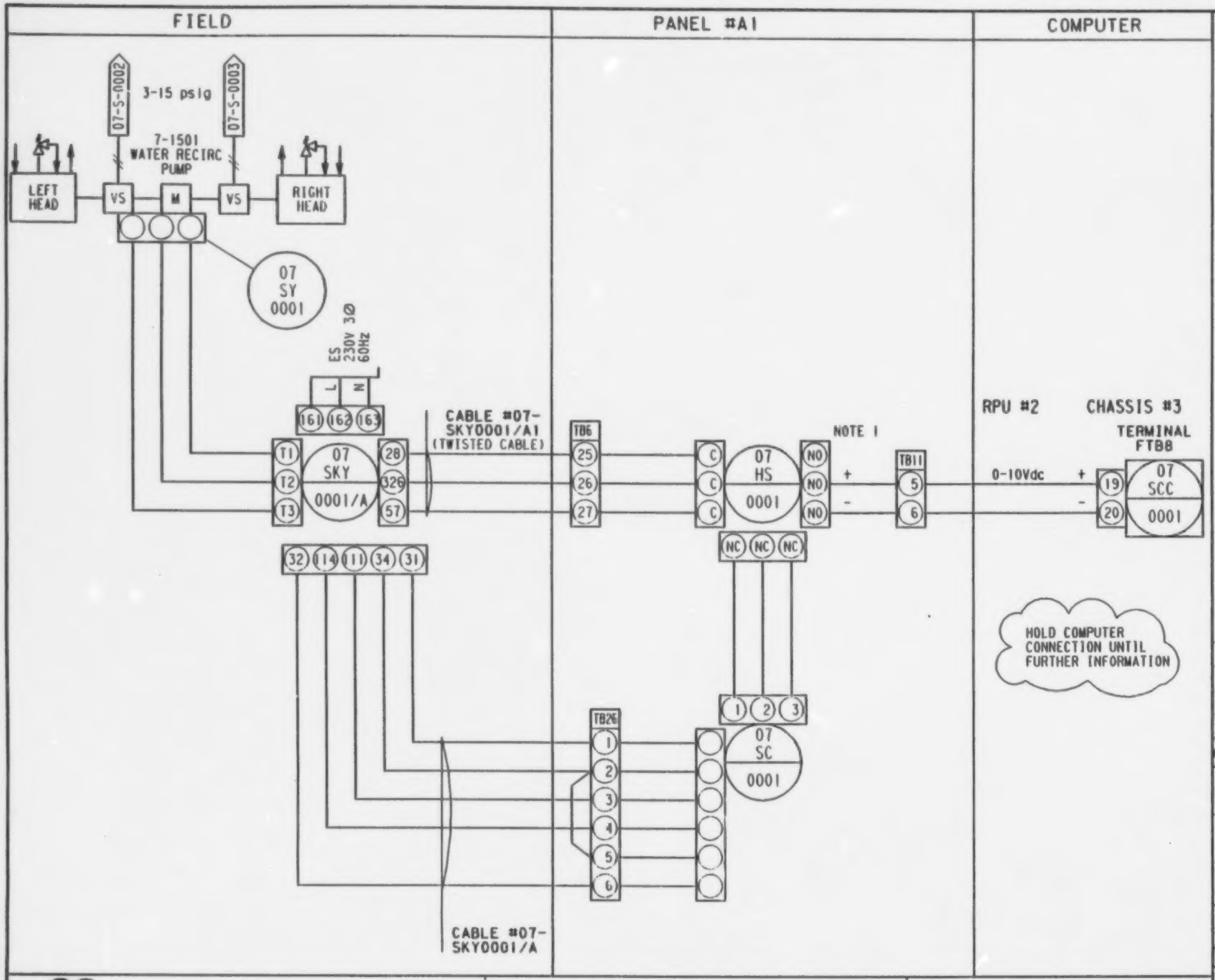

NOTES:

1. SELECTOR SWITCH POSITIONS:

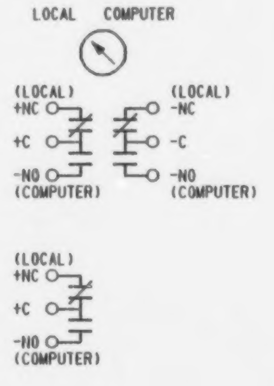

GENERAL NOTES:

A. 24 VAC Power Supply from GFC, Hammond Series Power Supply in panel.

B. 4-20mA signals to computer are shunted by EMR with a resistor to provide voltage signal to computer card.

C. Compatibility of voltage signals to computer programmed by EMR.

REV	DATE	DESCRIPTION	CHK	MEC APP	EMR APP
02	86.09	PH.1 FINAL	cP		
01	86.08.26	LOOP RE-DRAWN	cP		
00	86.07.15	FOR EMR APPROVAL	RW		

Energy, Mines and Resources Canada — Énergie, Mines et Ressources Canada

LOOP DIAGRAM
07-S-0001
AREA 7
OIL SCRUBBER SYSTEM

EMR COPROCESSING PILOT PLANT
PP3

PID No.	D-3-7 -MP-1		
DRAWN		DATE	86.09.16
CHKD		REV	
DESIGN			02

Monenco Consultants Limited | WORK ORDER No. DSS 8279-3 | REG. No. 204122

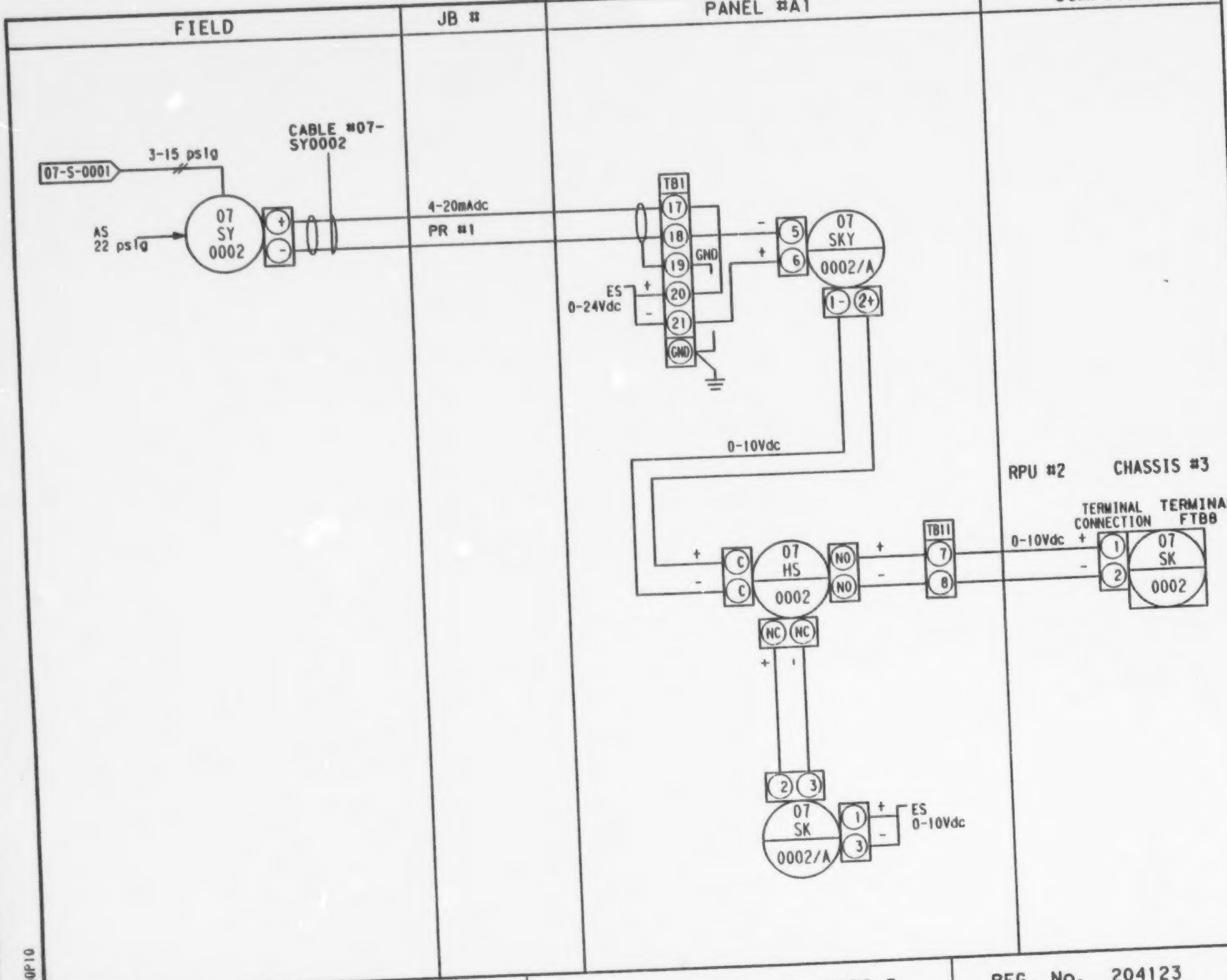

NOTES:
1. HAND SELECTOR POSITIONS

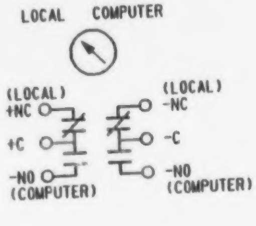

GENERAL NOTES:

A. 24 VAC Power Supply from GFC, Hammond Series Power Supply in panel.

B. 4-20mA signals to computer are shunted by EMR with a resistor to provide voltage signal to computer card.

C. Compatibility of voltage signals to computer programmed by EMR.

REV	DATE	DESCRIPTION	CHK	MEC APP	EMR APP
01	86.09	PH.1 FINAL			✓
00	86.01.15	FOR EMR APPROVAL			

Energy, Mines and Resources Canada / Énergie, Mines et Ressources Canada

LOOP DIAGRAM
07-S-0002
AREA 7
OIL SCRUBBER SYSTEM

EMR COPROCESSING PILOT PLANT
PP3

PID No.	D-3-7 -MP-1		
DRAWN	CAD	DATE	86.05.15
CHKD			REV 01
DESIGN			

Monenco Consultants Limited

WORK ORDER No. DSS 8279-3

REG. No. 204123

LOOP10

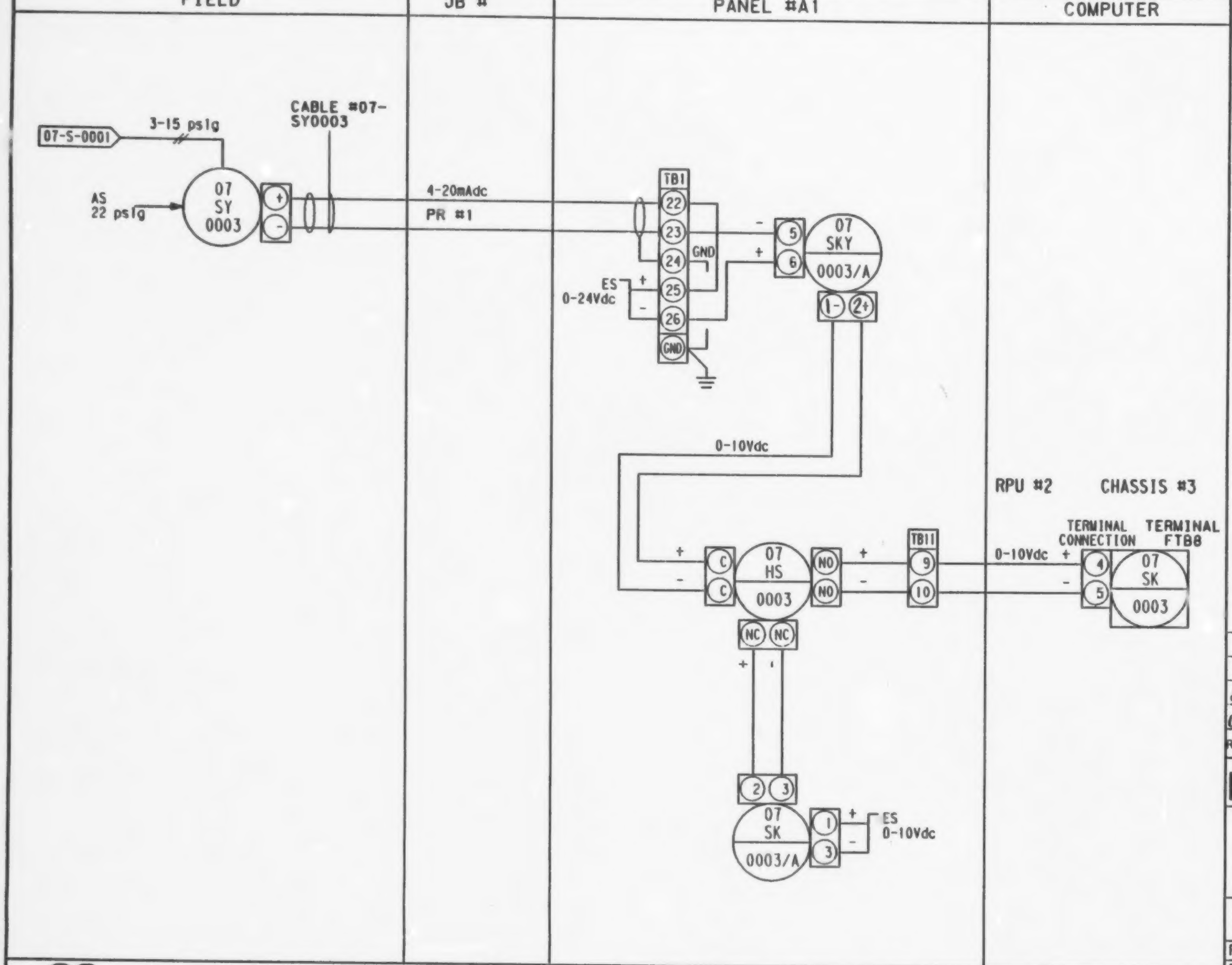

NOTES:

1. HAND SELECTOR POSITIONS

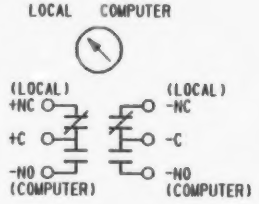

GENERAL NOTES:

A. 24 VAC Power Supply from GFC, Hammond Series Power Supply in panel.

B. 4-20mA signals to computer are shunted by EMR with a resistor to provide voltage signal to computer card.

C. Compatibility of voltage signals to computer programmed by EMR.

REV	DATE	DESCRIPTION	CHK	MEC APP	EMR APP
01	86.09	PH.1 FINAL	CP	RU	
00	86.07.15	FOR EMR APPROVAL	RU		✓

Energy, Mines and Resources Canada / Énergie, Mines et Ressources Canada

LOOP DIAGRAM
07-S-0003
AREA 7
OIL SCRUBBER SYSTEM

EMR COPROCESSING PILOT PLANT
PP3

PID No.	D-3-7 -MP-1		
DRAWN	CAD	DATE	86.05.15
CHKD			REV
DESIGN			01

Monenco Consultants Limited

WORK ORDER No. DSS 8279-3

REG. No. 204124

LOOP10

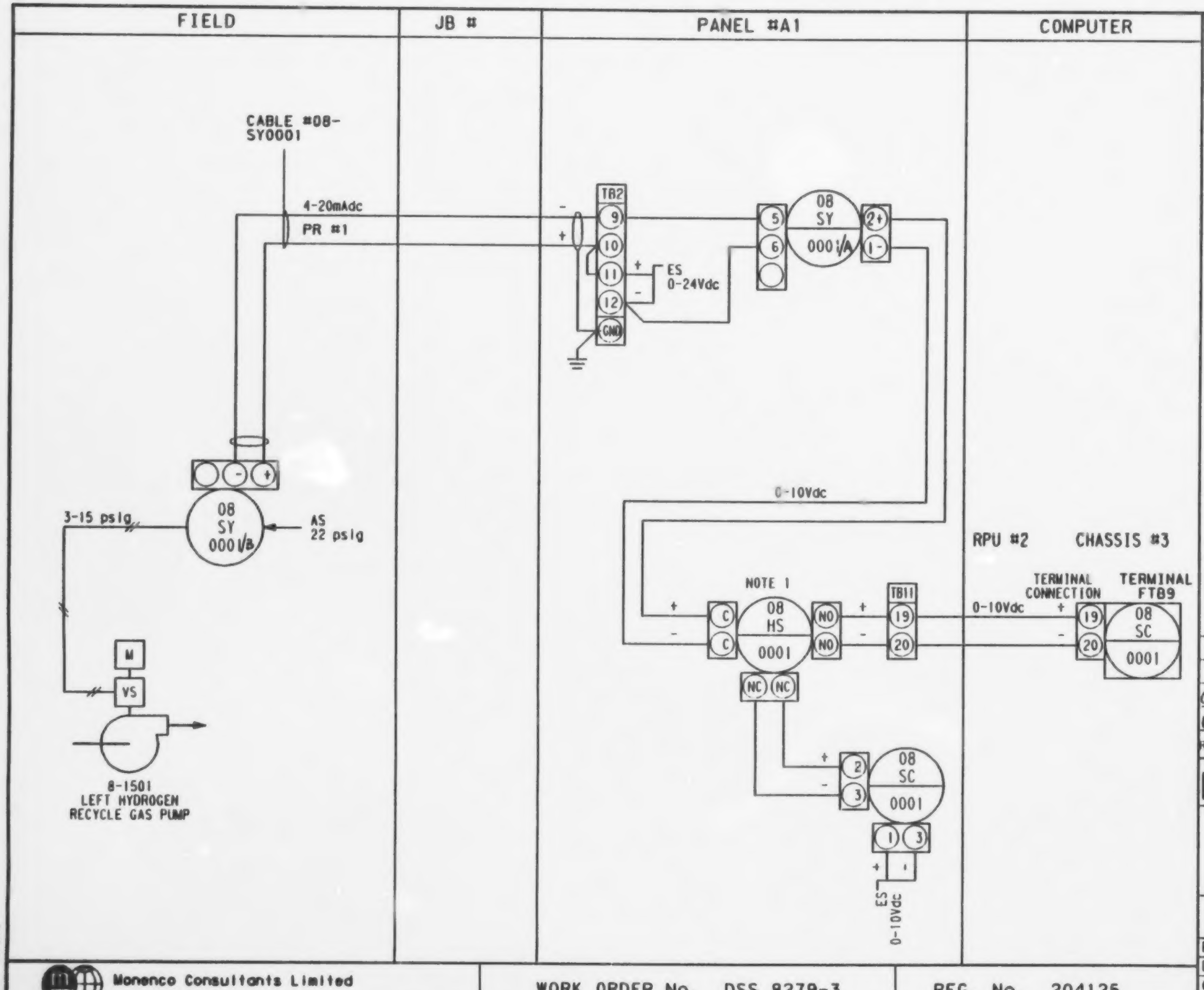

NOTES:

1. HAND SELECTOR POSITIONS

LOCAL COMPUTER

(LOCAL) +NC, +C, -NO (COMPUTER) — (LOCAL) -NC, -C, -NO (COMPUTER)

GENERAL NOTES:

A. 24 VAC Power Supply from GFC, Hammond Series Power Supply in panel.

B. 4-20mA signals to computer are shunted by EMR with a resistor to provide voltage signal to computer card.

C. Compatibility of voltage signals to computer programmed by EMR.

REV	DATE	DESCRIPTION	CHK	MEC APP	EMR APP
01	86.09	PH.4 FINAL			
00	86.07.15	FOR EMR APPROVAL			✓

Energy, Mines and Resources Canada — Énergie, Mines et Ressources Canada

LOOP DIAGRAM
08-S-0001
AREA 8
RECYCLE GAS SYSTEM

EMR COPROCESSING PILOT PLANT
PP3

PID No.	D-3-8 -MP-1		
DRAWN	CAD	DATE	86.06.27
CHKD			REV
DESIGN			01

Monenco Consultants Limited

WORK ORDER No. DSS 8279-3

REG. No. 204125

LOOP6

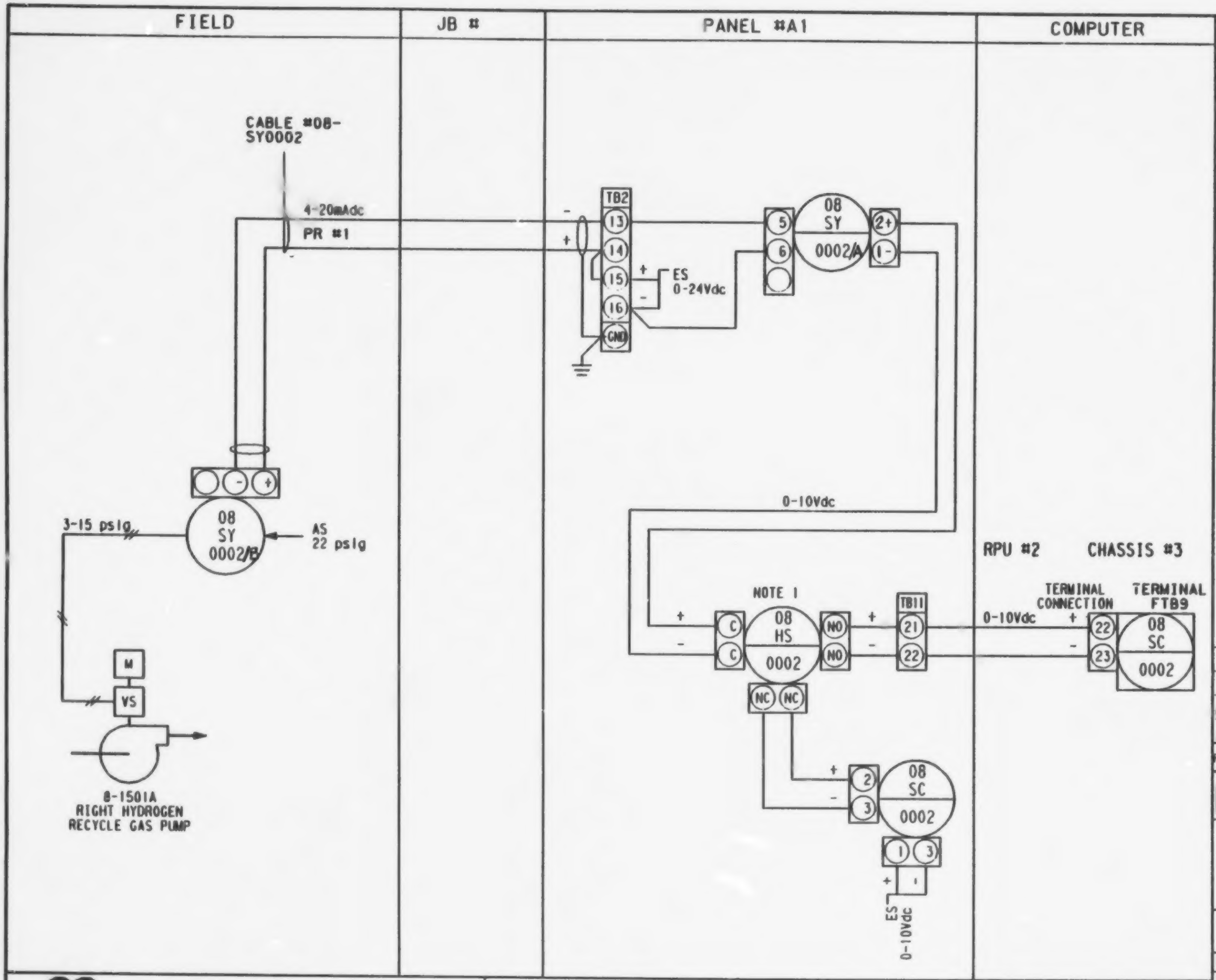

NOTES:

1. HAND SELECTOR POSITIONS

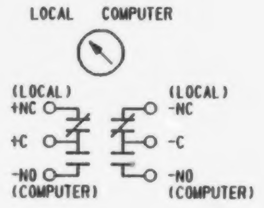

GENERAL NOTES:

A. 24 VAC Power Supply from GFC, Hammond Series Power Supply in panel.

B. 4-20mA signals to computer are shunted by EMR with a resistor to provide voltage signal to computer card.

C. Compatibility of voltage signals to computer programmed by EMR.

REV	DATE	DESCRIPTION	CHK	MEC APP	EMR APP
01	86.09	All.4 FINAL			
00	86.07.15	FOR EMR APPROVAL			✓

Energy, Mines and Resources Canada — Énergie, Mines et Ressources Canada

LOOP DIAGRAM
08-S-0002
AREA 8
RECYCLE GAS SYSTEM

EMR COPROCESSING PILOT PLANT
PP3

PID No.	D-3-8 -MP-1
DRAWN	CAD DATE 86.06.27
CHKD	REV
DESIGN	01

Monenco Consultants Limited

WORK ORDER No. DSS 8279-3

REG. No. 204126

LOOP6

CABLE BLOCK DIAGRAM

SHEET NUMBER	REGISTRATION NUMBER	SHEET NUMBER	REGISTRATION NUMBER	SHEET NUMBER	REGISTRATION NUMBER
SHEET 1	204488				
SHEET 2	204489				

NOTES:

SHIELDING, GROUNDING, CONDUCTOR IDENTIFICATION:

1. MULTICORE [illegible] WIRE TO HAVE INDIVIDUAL PAIR SHIELDS. A[illegible] OTHER SIGNALS UNSHIELDED.
2. ENSURE SHIELD CONTINUITY FROM SOURCE TO RECEIVER THRU [illegible] INTERMEDIATE TERMINALS.
3. GROUND [illegible] AT INSTRUMENT PANEL ONLY. JUMPER A[illegible] LOOP. IF RECEIVER AND [illegible] IN [illegible], GROUND SHIELD AT SOURCE INSTRUMENT.
4. INTERNAL WIRING IN PANEL NOT TO BE SHIELDED.
5. ALL [illegible] INSTRUMENT CASES TO BE GROUNDED.
6. CONDUCTOR IDENTIFICATION:
   a. [illegible]
   b. [illegible] WIRE DESIGNATION FOR [illegible]

SYMBOLS:

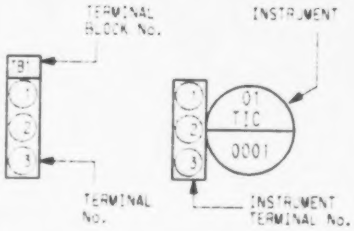

SEE PID, INSTRUMENT SYMBOL SHEET D-3-01-MP-2 FOR INSTRUMENT SYMBOL IDENTIFICATION PER ISA S5.1.

REV	DATE	DESCRIPTION	CHK	MEC APP	EMR APP
00	86.09	PH.1 FINAL	CP	WB	

Energy, Mines and Resources Canada — Énergie, Mines et Ressources Canada

CABLE BLOCK DIAGRAM

INSTRUMENT LOOP DIAGRAM COVER SHEET

EMR COPROCESSING PILOT PLANT PP3

DRAWN | CAD DATE 86.07.03
CHKD | REV 00
DESIGN

Monenco Consultants Limited

WORK ORDER No. DSS 8279-3 REG. No. 204308

100P

Volume

2

INSTRUMENT PANEL DRAWINGS

PILOT PLANT ELECTRONIC INSTRUMENTATION SYSTEM

PHASE 1 TASK 2

DSS FILE NO. 03SQ-23440-5-9182

Submitted to

SUPPLY AND SERVICES CANADA/ENERGY MINES AND RESOURCES

SEPTEMBER 1986

Monenco Consultants Limited
One St. Paul Street
St. Catharines, Ontario
L2R 7J9

DSS 8279-3

MICROMEDIA

Monenco

Monenco Consultants Limited
One St. Paul Street, St. Catharines, Ontario

September 26, 1986
File: DSS 8279-3

Energy, Mines and Resources
CANMET, Engineering Research Laboratories
555 Booth Street
Ottawa, Ontario
K1A 0G1

Attention: Mr. J. D. Chase
Research Scientist

Dear Mr. Chase,

RE: Pilot Plant PP3 Instrumentation Phase 1
DSS File No. 03SQ-23440-5-9182
Monenco Ref. DSS 8279-3

We are pleased to submit the final report for Phase 1 of this project. Volume 1 contains Instrument Loop Diagrams for Task 1. Volume II contains Instrument Panel Drawings for Task 2. This completes Monenco work under this contract for Phase 1.

Yours truly,

W. Piersol, P. Eng.
Project Manager

WP/ij
Encl.

cc: Ms. Gaetane Dagenais, DSS
Mr. R. P. West, Monenco
Mr. R. L. Bell, Monenco

CORRESPONDENCE: P.O. BOX 1540, ST. CATHARINES, ONTARIO L2R 7J9 TEL.: (416) 688-9263 TELEX: 061-5219 CABLES: "MONENCO"

HALIFAX • FREDERICTON • MONTREAL • OTTAWA • REXDALE • ST. CATHARINES • CALGARY • EDMONTON • VANCOUVER

EXECUTIVE SUMMARY

Phase 1 engineering has involved the production of connection diagrams for 520 instrument loops from Piping and Instrument Diagrams for the Heavy Oil Coprocessing Pilot Plant (PP3) at EMR's Bell's Corners Complex.

Phase 1 has also involved the design of associated instrument panels including panel layout and panel wiring diagrams in sufficient detail to allow mechanical and electrical construction of each panel. Cable groupings and junction box design are included in the engineering.

This documentation is provided in two volumes of this Final Report.

Ce projet compris le dessin et le preparation de documentation technique pour les systemes d'instrumentation à l'usine experimental PP3 à Bells' Corners. Ce rapport technique inclus des dessins schematiques pour 520 montages en boucle s d'instrumentation et les dessins et documentation pour construire des panneaux de contrôles. Il y a aussi des dessins pour faire des boîtes de jonction et des diagrammes de bloc pour le cablage.

Monenco
September 1986

	DRAWING No.	TITLE
VOLUME 1	204300	LIST OF THERMOCOUPLE LOOPS - WITH ON/OFF TEMPERATURE CONTROLLERS
	204301	LIST OF THERMOCOUPLE LOOPS - WITH PID TEMPERATURE CONTROLLERS
	204302	LIST OF THERMOCOUPLE LOOPS - ANALOG INPUT ONLY
	204303	LIST OF PRESSURE TRANSDUCER CABINET LOOPS
	204304	LIST OF HAND SWITCH LOOPS
	204305	LIST OF FLOW CONTROLLER LOOPS
	204306	LIST OF LIQUID LEVEL CONTROLLER, WEIGHT SCALE & MISCELLANEOUS LOOPS
	204307	LIST OF SPEED CONTROLLER LOOPS
	204308	CABLE BLOCK DIAGRAM
VOLUME 2	204400	INSTRUMENT CONTROL PANEL A1
	204401	INSTRUMENT CONTROL PANEL A2
	[illegible]	INSTRUMENT CONTROL PANEL 1
	[illegible]	INSTRUMENT CONTROL PANEL 2
	[illegible]	INSTRUMENT CONTROL PANEL 5

NOTES:

LIST OF DRAWINGS

EMR COPROCESSING PILOT PLANT

WORK ORDER No. [illegible]

REF. No. [illegible]

INDEX	DRAWING NO.	SHEET NO.
INDEX	B204498	
FRONT OF PANEL LAYOUT	204499	
MIMIC LAYOUT	204469	
ENGRAVING SCHEDULES	B204468	1
	B204500	2
	B204465	3
	B204420	4
MATERIAL LISTS	B204467	1
	B204464	2
	B204445	3

INDEX	DRAWING NO.	SHEET NO.
CONNECTION DIAGRAMS	204431	1
	204466	2
	204432	3
MIMIC DISPLAY CONNECTION DIAGRAM	204429	
INSTRUMENT SPECIFICATION SHEETS-HANDSWITCHES	204459	
-HANDSWITCHES	204460	
-POTENTIOMETER	204461	
-DIGITAL CLOCK	204462	
-DC POWER SUPPLIES	204463	
-MOSAIC GRID SYSTEM	204433	
PANEL A1 SPECIFICATION SHEETS	204446	

NOTES:

REV.	DATE	DESCRIPTION	BY	I/C	PIPING	MECH./PROC.	ELECT.	CIVIL	APPR.
01	16 09.86	PH. 1 FINAL	W.P						
0	20 06.86	PRELIMINARY	W.P						

APPROVALS

WO. DSS8279-3
DESIGNED: PIERSOL
DATE: JUNE 86
DRAWN:
DATE:
SUPV.:
DATE:
PASSED: Pierso
DATE: sept 86
APPROVED:
DATE:

ENERGY, MINES and RESOURCES CANADA

COPROCESSING PILOT PLANT PP3

CONTROL PANEL INDEX SHEET
INSTRUMENT PANEL A1

Monenco:

B204498
REGISTRY NO.

01
REV.

INST./EQUIP. TAG NO.	NAMEPLATE SIZE	ORIENTATION	LOCATION	ENGRAVING
NP2	SIZE 2		SEE FRONT LAYOUT DWG 204499	PP3 PANEL A1
NP4	SIZE 3		SEE FRONT LAYOUT DWG 204499	OFF GAS 1 FLOW 09FI0002
NP5	SIZE 3		SEE FRONT LAYOUT DWG 204499	OFF GAS 2 FLOW 09FI0003
NP6	SIZE 3		SEE FRONT LAYOUT DWG 204499	OFF GAS 3 FLOW 09FI0004
NP7	SIZE 3		SEE FRONT LAYOUT DWG 204499	OFF GAS 4 FLOW 09FI0005
NP8	SIZE 3		SEE FRONT LAYOUT DWG 204499	OFF GAS 5 FLOW 09FI0006
NP9	SIZE 3		SEE FRONT LAYOUT DWG 204499	FEED RECY WT1 L TNK 01WI0002
NP10	SIZE 3		SEE FRONT LAYOUT DWG 204499	FEED RECY WT1 R TNK 01WI0004
NP11	SIZE 3		SEE FRONT LAYOUT DWG 204499	HE WT1 HE DRUM WEIGHT 04WI0002
NP12	SIZE 3		SEE FRONT LAYOUT DWG 204499	HE WT1 HE DRUM WEIGHT 05WI0001
NP13	SIZE 3		SEE FRONT LAYOUT DWG 204499	FEED RECY RATE L SELECT 01HS0002
NP14	SIZE 3		SEE FRONT LAYOUT DWG 204499	FEED RECY RATE L PUMP 01SC0002
NP15	SIZE 3		SEE FRONT LAYOUT DWG 204499	SCRUB 0 RATE L SELECT 07HS0002

NOTES: SEE B204498

1. NAME PLATE TYPE: LAMACOID
LETTER SIZE: SEE 204446 SIZES 1,2,3
TITLE COLOUR: WHITE
BACKGROUND COLOUR: BLACK

REV.	DATE	DESCRIPTION	BY	I/C	PIPING	MECH./PROC.	ELECT.	CIVIL	APPR.
01	15 07.86	PH. I FINAL	C.P.						
0	20 06.86	PRELIMINARY	W.P.						

APPROVALS

WO. DSS8279-3
DESIGNED: PIERSOL
DATE: JUNE 86
DRAWN:
DATE:
SUPV.:
DATE:
PASSED: [signature]
DATE: Sept 86
APPROVED:
DATE:

ENERGY, MINES and RESOURCES CANADA

COPROCESSING PILOT PLANT PP3

CONTROL PANEL ENGRAVING SCHEDULE
INSTRUMENT PANEL A1
SHT 1 OF 4

Monenco:

B204468 REGISTRY No.

01 REV.

INST./EQUIP. TAG NO.	NAMEPLATE SIZE	ORIENTATION	LOCATION	ENGRAVING
NP16	SIZE 3		SEE FRONT LAYOUT DWG 204499	SCRUB 0 RATE L HEAD 07SK0002/A
NP17	SIZE 3		SEE FRONT LAYOUT DWG 204499	06HS0001
NP18	SIZE 3		SEE FRONT LAYOUT DWG 204499	SCRUB 0 MOTOR SELECT 07HS0001
NP19	SIZE 3		SEE FRONT LAYOUT DWG 204499	FEED RECY RATE R SELECT 01HS0004
NP20	SIZE 3		SEE FRONT LAYOUT DWG 204499	FEED RECY RATE R PUMP 01SC0004
NP21	SIZE 3		SEE FRONT LAYOUT DWG 204499	SCRUB 0 RATE R SELECT 07HS0003
NP22	SIZE 3		SEE FRONT LAYOUT DWG 204499	SCRUB 0 RATE R HEAD 07SK0003/A
NP23	SIZE 3		SEE FRONT LAYOUT DWG 204499	06SC0001
NP24	SIZE 3		SEE FRONT LAYOUT DWG 204499	SCRUB 0 MOTOR RATE 07SC0001
NP25	SIZE 3		SEE FRONT LAYOUT DWG 204499	GAS RECY RATE L SELECT 08HS0001
NP26	SIZE 3		SEE FRONT LAYOUT DWG 204499	GAS RECY RATE L PUMP 08SC0001
NP27	SIZE 3		SEE FRONT LAYOUT DWG 204499	03SIC0001
NP28			SEE FRONT LAYOUT DWG 204499	NOT USED
NP29	SIZE 3		SEE FRONT LAYOUT DWG 204499	PLC FAIL 13L0007
NP30	SIZE 3		SEE FRONT LAYOUT DWG 204499	05LIR0001

NOTES: SEE B204468

1. NAME PLATE TYPE:
LETTER SIZE: SEE SHEET 1
TITLE COLOUR:
BACKGROUND COLOUR:

REV.	DATE	DESCRIPTION	BY	I/C	PIPING	MECH./PROC.	ELECT.	CIVIL	APPR.
01	15 09.86	PH. 1 FINAL	C.P.						
0	20 06.86	PRELIMINARY	W.P.						

APPROVALS

WO. DSS8279-3
DESIGNED: PIERSOL
DATE: JUNE 86
DRAWN:
DATE:
SUPV.:
DATE:
PASSED: [signature]
DATE: Sept 86
APPROVED:
DATE:

ENERGY, MINES and RESOURCES CANADA

COPROCESSING PILOT PLANT PP3

CONTROL PANEL ENGRAVING SCHEDULE
INSTRUMENT PANEL A1
SHT 2 OF 4

Monenco:

B204500 REGISTRY NO.
01 REV.

INST./EQUIP. TAG NO.	NAMEPLATE SIZE	ORIENTATION	LOCATION	ENGRAVING
NP31	SIZE 3		SEE FRONT LAYOUT DWG 204499	08FIR0002
NP32				NOT USED
NP33	SIZE 3		SEE FRONT LAYOUT DWG 204499	LE SP1 LE RECEIVER 05LIC0001
NP34	SIZE 3		SEE FRONT LAYOUT DWG 204499	SCRB SP1 W SCRB LVL 06LIC0001
NP35	SIZE 3		SEE FRONT LAYOUT DWG 204499	SCRB SP2 0 SCRB LVL 07LIC0001
NP36	SIZE 3		SEE FRONT LAYOUT DWG 204499	GAS FL1 MKUP TOTALIZER 08FQI0001
NP37	SIZE 3		SEE FRONT LAYOUT DWG 204499	FEED FLOW TO FEED PMP 01FI0001
NP38	SIZE 3		SEE FRONT LAYOUT DWG 204499	HE INT FLOW TIMER 04WK0001
NP39	SIZE 3		SEE FRONT LAYOUT DWG 204499	HE INT WT ALARM 04WAL0001/04WAH0001
NP40	SIZE 3		SEE FRONT LAYOUT DWG 204499	GAS FL1 MKUP 08FT0001
NP41	SIZE 3		SEE FRONT LAYOUT DWG 204499	HE LV1 HCP LVL 04WIC0001
NP42	SIZE 3		SEE FRONT LAYOUT DWG 204499	GAS RECY RATE R SELECT 08HS0002
NP43	SIZE 3		SEE FRONT LAYOUT DWG 204499	GAS RECY RATE R HEAD 08SC0002
NP44				NOT USED
NP45				NOT USED

NOTES: SEE B204468

1. NAME PLATE TYPE:
LETTER SIZE: } SEE SHEET 1
TITLE COLOUR:
BACKGROUND COLOUR:

REV.	DATE	DESCRIPTION	BY	I/C	PIPING	MECH./PROC.	ELECT.	CIVIL	APPR.
01	15 09.86	PH. 1 FINAL	C.P	WR					
0	20 06.86	PRELIMINARY	W.P						

APPROVALS

WO. DSS8279-3
DESIGNED: PIERSOL
DATE: JUNE 86
DRAWN:
DATE:
SUPV.:
DATE:
PASSED: Russel
DATE: Sept 86
APPROVED:
DATE:

ENERGY, MINES and RESOURCES CANADA

COPROCESSING PILOT PLANT PP3

CONTROL PANEL ENGRAVING SCHEDULE
INSTRUMENT PANEL A1
SHT 3 OF 4

Monenco:

B204465
REGISTRY No.

01
REV.

INST./EQUIP. TAG NO.	NAMEPLATE SIZE	ORIENTATION	LOCATION	ENGRAVING
NP46	SIZE 3		FRONT LAYOUT SEE DWG 204499	FUNCTION 1 113L0002
NP47	SIZE 3		FRONT LAYOUT SEE DWG 204499	OTHR W·T1 PURGE OIL 11WI0001

NOTES: SEE INDEX SH B204458

1. NAME PLATE TYPE:
LETTER SIZE: SEE SHEET 1
TITLE COLOUR:
BACKGROUND COLOUR:

REV.	DATE	DESCRIPTION	BY	I/C	PIPING	MECH./PROC.	ELECT.	CIVIL	APPR.
01	15 09.86	PH. 1 FINAL	C.P	WP					
0	86 06.86	PRELIMINARY	W.P						

APPROVALS

WO. DSS8279-3
DESIGNED: PIERSOL
DATE: JUNE 86
DRAWN:
DATE:
SUPV.:
DATE:
PASSED: Reiswl
DATE: Sept 86
APPROVED:
DATE:

ENERGY, MINES and RESOURCES CANADA

COPROCESSING PILOT PLANT PP3

CONTROL PANEL ENGRAVING SCHEDULE
INSTRUMENT PANEL A1
SHT 4 OF 4

Monenco:

B204420 REGISTRY NO.

01 REV.

ITEM NO. (1)	DESCRIPTION (2)	TAG NO. (3)	TYPE (4)	MANUFAC-TURER (5)	MODEL NO. (6)	QUANTITY (7)	MOUNTING LOCATION (8)	9	10	11	SUPPLIED BY (12)	INSTRUMENT SPEC. SHEET NO. (13)	REMARKS (14)
1	TACHOMETER READOUT.			METER MASTER	75709	5	PANEL FRONT				EMR		
2	WEIGHT INDICATOR.	01W10002 01W10004		AURORA SCALES	UMC 2000	2	PANEL FRONT				EMR		
3	WEIGHT DISPLAY.	[illegible] 04W10002		TOLEDO SCALES	8132	3	PANEL FRONT				EMR		
4	HANDSWITCH.					6	PANEL FRONT				PANEL VENDOR	204459	
5	POTENTIOMETER.					6	PANEL FRONT				PANEL VENDOR	204461	
6	DIGITAL CLOCK.					1	PANEL FRONT				PANEL VENDOR	204462	
7	ALARM HORN.					1	PANEL FRONT				PANEL VENDOR		
8	MULTI POINT RECORDER. 1.			YEW.	ER250	1	PANEL FRONT				EMR		SER. 4088-11
9	MULTI POINT RECORDER. 2.			YEW.	ER250	1	PANEL FRONT				EMR		SER. 4088-11
10	COMPUTER CRT.		20"WX18"H X22"L			2	PANEL FRONT				EMR		
11	LEVEL INDICATING RECORDER.	LIR0001 05/06.		YEW. INSTRUM	4153	2	PANEL FRONT				EMR		
12	LEVEL INDICATING CONTROLLER.	LIC0001 05/06/07.		YEW. INSTRUM	SLPC	3	PANEL FRONT				EMR		
13	MOUTING TRAY.			YEW.	SHUP	3	PANEL FRONT				PANEL VENDOR		1 UNIT FOR ITEM 12
14	FLOW RATE TOTALIZER.	08FQI 0001		PROMAC CONTROLS	COMET	1	PANEL FRONT				EMR		PCU 42131126 SERIAL HCF0071
15	FLOW RATE INDICATOR.	01FI 0001		MICRO MOTION	DORT	1	PANEL FRONT				EMR		

NOTES:
SEE INDEX SHEET B204498

REV.	DATE	DESCRIPTION	BY	I/C	PIPING	MECH./PROC.	ELECT.	CIVIL	APPR.
01	15 09.86	PH. 1 FINAL	W.P						
0	20 06.86	PRELIMINARY	W.P						

APPROVALS

WO. DSS8279-3
DESIGNED: PIERSOL
DATE: JUNE 86
DRAWN:
DATE:
SUPV.:
DATE:
PASSED: [signature]
DATE: Sept 86
APPROVED:
DATE:

ENERGY, MINES and RESOURCES CANADA
COPROCESSING PILOT PLANT PP3
CONTROL PANEL MATERIAL LIST
INSTRUMENT PANEL A1
SHT 1 OF 3

Monenco:

B204467
REGISTRY No.

01
REV.

1	2	3	4	5	6	7	8	9	10	11	12	13	14
ITEM NO.	DESCRIPTION	TAG NO.	TYPE	MANUFAC-TURER	MODEL NO.	QUANTITY	MOUNTING LOCATION				SUPPLIED BY	INSTRUMENT SPEC. SHEET NO.	REMARKS
16	TIMER SWITCH	04WK 0001		AUTO TIME &CONTROLS	U852274	1	PANEL FRONT				EMR		SER 342A200 Q10PX
17	ALARM UNIT	04WAH/WAL 0001		HONEYWELL	AV301 CC202	1	PANEL FRONT				EMR		SER 8100-1539
18	FLOW LINEARIZER	08FT 0001		RAMAPO INSTRUM	DIA 8401R	1	PANEL FRONT				EMR		SER 16377
19	WEIGHT INDICAT. &CONTROLLER	04WIC 0001		TOLEDO SCALES	8142/951	1	PANEL FRONT				EMR		
20	PLC REMOTE UNIT			HONEYWELL		1	TROLLEY				EMR		
21	PRINTER			EPSON		1	TROLLEY				EMR		
22	MOSAIC GRID SYSTEM.		24MM X24MM	SAMCO CUSCO		36"X36" APPROX	PANEL FRONT				PANEL VENDOR		SEE MIMIC LAYOUT 204469
23	HANDSWITCHES			SAMCO CUSCO		37	IN MOSAIC GRID				PANEL VENDOR	204460	SEE DW. 204469
24	TIMER SWITCH	03KC 0001		AUTO TIME &CONTROLS	U85227A	1	IN MOSAIC GRID				EMR		SEE DW. 204469 SER 342A200 Q10PX
25	TELEPHONE					1	PANEL				EMR		INSTALLED BY EMR
26	SPEED INDICATING CONTROLLER	03SIC 0001		AUTOCLAVE	3034-1014	1	PANEL FRONT				EMR		SER 83-11535-010
27	INDICATION LIGHT	13L0002 /0007		ALLEN- BRADLEY	800H-QP10 OR EQIV.	2					PANEL VENDOR		1 AMBER CAP AND 1 RED CAP
28	HANDSWITCH					2	PANEL FRONT				PANEL VENDOR		
29	MOTOR SPEED CONTROL UNIT	06SC0001		RELIANCE- ELEC.	MINIPAK	1	PANEL FRONT				EMR		
30	MOTOR SPEED CONTROL UNIT	07SC0001		RELIANCE- ELEC.	24C105	1	PANEL FRONT				EMR		

NOTES:
SEE INDEX SHEET B204498

REV.	DATE	DESCRIPTION	BY	I/C	PIPING	MECH./PROC.	ELECT.	CIVIL	APPR.
01	15 09.86	PH. 1 FINAL	W.P						
0	20 06.86	PRELIMINARY	W.P						

APPROVALS

WO. DSS8279-3
DESIGNED: PIERSOL
DATE: JUNE 86
DRAWN:
DATE:
SUPV.:
DATE:
PASSED: [signature]
DATE: Sept 86
APPROVED:
DATE:

ENERGY, MINES and RESOURCES CANADA
COPROCESSING PILOT PLANT PP3
CONTROL PANEL MATERIAL LIST
INSTRUMENT PANEL A1
SHT 2 OF 3

Monenco:

B204464
REGISTRY NO.
01
REV.

1	2	3	4	5	6	7	8	9	10	11	12	13	14
ITEM NO.	DESCRIPTION	TAG NO.	TYPE	MANUFAC-TURER	MODEL NO.	QUANTITY	MOUNTING LOCATION				SUPPLIED BY	INSTRUMENT SPEC. SHEET NO.	REMARKS
31	24 VOLT DC POWER SUPPLIES					AS REQ'D	PANEL REAR				PANEL VENDOR	204463	SEE WIRING CONNECTION DIAGRAMS
32	10 VOLT DC POWER SUPPLIES					AS REQ'D	PANEL REAR				PANEL VENDOR	204463	SEE WIRING CONNECTION DIAGRAMS
33	PRINTER TROLLEY					ONE					PANEL VENDOR		TO FIT RECESS IN PANEL

NOTES:
SEE INDEX SHEET B204498

REV.	DATE	DESCRIPTION	BY	I/C	PIPING	MECH./PROC.	ELECT.	CIVIL	APPR.
0	15 09.86	PH. I FINAL	W.P.	[signature]					

WO. DSS8279-3
DESIGNED: PIERSOL
DATE: JUNE 86
DRAWN:
DATE:
SUPV.:
DATE:
PASSED: [signature]
DATE: Sept 86
APPROVED:
DATE:

ENERGY, MINES and RESOURCES CANADA

COPROCESSING PILOT PLANT PP3

CONTROL PANEL MATERIAL LIST
INSTRUMENT PANEL A1
SHT 3 OF 3

Monenco:

B204445 REGISTRY NO.
0 REV.

Monenco

PANEL A1

CONTROL PANELS SPECIFICATION SHEET

SHEET 1 OF 2

CLIENT: ENERGY, MINES & RESOURCES CANADA.	
PROJECT: PP3 INSTR. PHASE 1	WORK ORDER: DSS8279-3
PURCHASE ORDER NO.:	CONTRACT NO.: 03SQ23440-59182
SUPPLIER:	MANUFACTURER:

GENERAL

1 APPLICABLE TO: ☒ PROPOSAL ☐ PURCHASE ☐ AS BUILT
2 SERVICE: PP3 GENERAL CONTROL EQUIPMENT NO. PANEL A1
3 PANEL TYPE: ☐ CONSOLE ☐ DESK ☒ PANEL ☐ WALL
4 PANEL CLASSIFICATION: EEMAC 1
5 AREA CLASSIFICATION: ☒ NON-HAZARDOUS ☐ HAZARDOUS CLASS ____ GROUP ____ DIV ____
6 ENVIRONMENT: AMBIENT TEMPERATURE: MIN ____ MAX ____ NORMAL 20 °C
7 HUMIDITY: MIN ____ MAX ____ NORMAL 40 %
8 ALTITUDE: 300 (ft)
9 REMARKS:
10 HEAT DISSIPATION: ____ KW ☐ NATURAL VENTILATION ☒ FORCED VENTILATION
11 DETAILS: SIZED BY PANEL FABRICATOR - C/W SWITCH
12 ADDITIONAL STANDARDS: C22.4
13 REMARKS: CSA CERTIFICATION REQUIRED

CONSTRUCTION

14 MATERIAL: ☒ STEEL ☐ OTHER
15 VIBRATION MOUNTINGS: ☒ NO ☐ YES
16 GLASS FRONTED DOORS: ☒ NO ☐ YES
17 GRAPHIC MIMIC: TYPE: CONSTRUCTION:
18 ☒ STATIC ☐ PAINTED ☐ LAMINATED PLASTIC ☐ BACKLIGHTED
19 ☐ SEMI GRAPHIC ☐ MYLAR ☒ MODULAR ☒ FRONT/~~REAR~~ ENGRAVED
20 ☐ FULL GRAPHIC ☐ OTHER
21 MIMIC COLOURS:
22 MIMIC SYMBOLS: SEE DWG 204469
23 REMARKS:
24 PAINTING: INTERIOR: ☒ WHITE SEMI GLOSS ☐ OTHER
25 EXTERIOR: COLOUR ANSI/ASA 61 GREY BAKED DECORATABLE ENAMEL
26 SPECIAL PAINT FINISH
27 REMARKS: SEE SHEET 2

TUBING

NOT APPLICABLE

28 ~~INSTRUMENT AIR SUPPLY:~~
29 ~~BULKHEAD FITTINGS:~~ ☐ ~~TOP~~ ☐ ~~BOTTOM~~
30 ~~TUBING MATERIALS:~~ ☐ ~~COPPER~~ ☐ ~~PVC COATED COPPER~~ ☐ ~~POLYETHYLENE~~
31 ~~AIR HEADER:~~ ☐ ~~REQUIRED~~ ☐ ~~NOT REQUIRED~~
32 SIZE: ☐ 25MM ☐ 40MM ☐ 50MM
33 ~~FILTER/REGULATOR:~~ ☐ ~~ONE~~ ☐ ~~TWO~~
34 ~~REGULATOR SETTING~~ ____ ~~RELIEF VALVE SETTING~~
35 ~~DIRECT CONNECTED GAUGES:~~ ☐ ~~YES~~ ☐ ~~NO~~ ~~TUBING MATERIALS~~
36 ~~REMARKS:~~

REV. NO.	DATE	DESCRIPTION	DES. BY	APP. BY	MECH./PROCESS	PIPING
0	09.86	PH 1 FINAL	WP	[illegible]		

MANUFACTURER'S DRAWING NO.:

NOTES:

DESIGNED BY / DATE	APPROVED BY / DATE	SPEC. SHEET NO.:
PIERSOL / 09-86		204446 SH 1 OF 6

(100,102)1SS40 .CHT

PANEL A

Monenco

CONTROL PANELS SPECIFICATION SHEET

SHEET 2 OF 2

CLIENT: ENERGY, MINES & RESOURCES CANADA	
PROJECT: PP3 INSTR. PHASE 1	WORK ORDER: DSS 8279-3
PURCHASE ORDER NO.:	CONTRACT NO.: 03SQ 23440 59182
SUPPLIER:	MANUFACTURER:

ELECTRICAL ARRANGEMENTS

37 POWER SUPPLIES: VOLTS/FREQ.: (1) 115/60 (2) 24 DC (3) 0 VDC (4) ____

38 USE: MAIN CCTS / INST CCTS / INST CCTS

39 CABLE ENTRY: ☒ TOP ☐ BOTTOM

40 TERMINAL BLOCKS: TYPE: WEIDMULLER SAK 6N - SEE No 47

41 INTERIOR LIGHTING: ☒ REQUIRED DETAILS FLUORESCENT - TOGGLE SWITCH

42 CONVENIENCE OUTLETS: ☒ REQUIRED DETAILS SEE DWGS

43 WIRING IN HAZARDOUS AREAS: ☐ EXPLOSION PROOF ☐ PURGED ☐ INTRINSICALLY SAFE

44 DETAILS ____

45 ~~TELEPHONE JACKS: ☐ REQUIRED DETAILS~~

46 ~~HEATER: ☐ REQUIRED DETAILS~~

47 REMARKS: SEE SHEETS 3, 4, 5, 6

TESTING & SHIPPING DETAILS

48 SHIPPING: ☒ DOMESTIC ☐ OVERSEAS PACKING REQUIREMENTS ____

49

50 ☐ SHIPPED AS ONE PANEL ☒ DIVIDED FOR SHIPPING SHIPPING DIVISION ____

51 MAX SECTION SIZE PER #53

52 ASSEMBLED WEIGHT ____ KG.(LB) SHIPPING WEIGHT ____ KG.(LB)

53 DIMENSIONS: L 72 W 36 H 100 (IN)

54 TESTING: SPECIAL REQUIREMENTS 1. POINT-TO-POINT WIRING 2. AC AND DC

55 POWER CHECKS 3. OWNER INSPECTION.

56 REMARKS:

REV. NO.	DATE	DESCRIPTION	DES. BY	APP. BY	MECH./PROCESS	PIPING
	09/86	PH 1 FINAL	MF			

MANUFACTURER'S DRAWING NO.:

NOTES:

DESIGNED BY / DATE	APPROVED BY / DATE	SPEC. SHEET NO.:
PIERSOL / 09-86		204446 SH 2 OF 6

[100,102]IS541 .CHT

Monenco

SPECIFICATION SHEET

CLIENT: ENERGY, MINES, + RESOURCES CAN.	
PROJECT: PP3 INSTR. PH 1	WORK ORDER: DSS 8279-3
PURCHASE ORDER NO.:	CONTRACT NO.: 03SQ23440-59182
SUPPLIER:	MANUFACTURER:

INSTRUMENT PANEL A1 (cont'd)

A. PANEL CONSTRUCTION

1. Panel to be prefabricated and fully wired and tested in shop. EMR purchased instruments will be shipped to the shop.

2. Panel to be fully enclosed, self supporting with rear lift-off doors.

3. Fabricate panel front from reinforced No. 10 gauge (minimum) cold rolled steel. Doors and filler plates to be No. 14 gauge (minimum).

4. Provide internal framework and partition struts as required for panel support and mounting of terminal block rails, internal components, and wiring.

5. Provide panel support rails under panel for 2" stand-off from floor surface.

6. Provide removable gland plates on panel top for cable entry.

7. Provide modular front layout with removable plate sections for future changes by EMR. Submit dimensioned panel layout fabrication drawing for approval before manufacture.

8. Provide forced ventilation system in panel with filtered air in-take for positive pressure inside panel.

B. LIGHTS, RECEPTACLES, AND POWER

1. Lights, receptacles, and power distribution in panel to be in accordance with CSA C22.1 Section 12.

REV. NO.	DATE	DESCRIPTION	DES. BY	APP. BY	MECH./PROCESS	PIPING
	10/86	PH 1 FINAL	[illegible]	[illegible]		

MANUFACTURER'S DRAWING NO.:

NOTES:
1. THIS SHEET ALSO APPLIES TO PANELS C AND S

DESIGNED BY / DATE	APPROVED BY / DATE	SPEC. SHEET NO.	REV.
[illegible] / 09.86		204446 SH 3 OF 6	0 0

[100, 102] ISSI4 .CHT

Monenco

SPECIFICATION SHEET

CLIENT: ENERGY, MINES, + RESOURCES CAN.	
PROJECT: PP 3 INSTR. PH 1	WORK ORDER: DSS 8279-3
PURCHASE ORDER NO.:	CONTRACT NO.: 03SQ23440-59182
SUPPLIER:	MANUFACTURER:

2. Provide fluorescent light fixture in each partitioned section of panel. All lights to be switched by one SPST toggle switch. Fixtures to be arranged so lamps can be safely replaced without de-energizing panel equipment.

3. Provide fused disconnect safety switch for main incoming 120/240 vac power into panel as per drawings.

4. Provide fuse type terminal blocks for 110 volt circuits as per drawings Weidmuller SAKS or equal and neutral terminals Weidmuller type NT or equal.

5. For instruments with AC power cord and plug - provide matching receptacle as per drawings.

6. Provide 10 volt dc power supplies and 24 volt dc power supplies mounted and wired in panel as required by connection diagram references.

C. GROUNDING

1. Provide electrical grounding in panels to meet CSA C22.1 Section 10 and C22.2 No. 4.

2. Install power ground bus in each panel section. Jumper adjacent panel sections. Provide cable lug for incoming No. 2 AWG ground wire to panel.

3. Jumper terminals for instrument cable shields as indicated on drawings and connect to separate instrument ground bus in panel.

D. WIRING AND TERMINATIONS

1. Arrange and mount terminal blocks at rear or side of each panel section. Space terminal strips for wireway separation; approximately 350 mm centers.

REV. NO.	DATE	DESCRIPTION	DES. BY	APP. BY	MECH./PROCESS	PIPING
0	05.86	PH 1 FINAL	[illegible]	[illegible]		

MANUFACTURER'S DRAWING NO.:

NOTES:
1. THIS SHEET ALSO APPLIES TO PANEL C AND PANEL S.

DESIGNED BY / DATE	APPROVED BY / DATE	SPEC. SHEET NO.	REV.
PIERSOL / 05-86		204446 SH 4 OF 6	0

[100,102]ISSI4 .CHT

Monenco

SPECIFICATION SHEET

CLIENT: ENERGY, MINES, + RESOURCES CAN.	
PROJECT: PP3 INSTR. PH 1	WORK ORDER: DSS 8279-3
PURCHASE ORDER NO.:	CONTRACT NO.: 03SQ23440-5-9182
SUPPLIER:	MANUFACTURER:

2. Terminal blocks for field terminated cables and wiring to be Weidmuller type SAK 6N feed through or equal. Other terminal blocks to be Weidmuller as indicated on drawings.

3. Provide wireways for field cabling on one side of terminal blocks and for internal wiring on other side of terminal block. Use PVC similar to Panduit Type E Snap-in - Slot Design with covers Type C.

4. Size wireway so cable fill is not more than 60% of cross section area.

5. Locate wireways so as not to interfere with access to panel instruments or encroach on panel front space for future instruments.

6. Provide separate wireways for:
   - AC power,
   - DC power including 24 volts and 10 volts,
   - signal wire including thermocouple signals, 4 - 20 ma signals, and other low level signals.

7. Wiring to be in exact accordance with connection diagrams. Panel vendor to choose location of terminal blocks.

8. For shipping of panel in sections, inter-panel wiring shall be terminated on terminal strips on one side of the shipping section. Wiring on other side of shipping section to be of correct length to connect to terminal strip when panels assembled.

9. Identify terminals as per drawings. Identify wires at each end with slip-on wire markers as per drawings. Numbering system shown on drawings must be used.

10. Wires terminated at screwed or post connectors on instruments to be fitted with vinyl insulated forked tongue crimped connectors.

REV. NO.	DATE	DESCRIPTION	DES. BY	APP. BY	MECH./PROCESS	PIPING	
[illegible]	[illegible]	[illegible]	[illegible]				

MANUFACTURER'S DRAWING NO.:

NOTES: THIS SHEET ALSO APPLIES TO PANEL 1 AND PANEL 2

DESIGNED BY / DATE	APPROVED BY / DATE	SPEC. SHEET NO.:	REV.
[illegible] / 05-26		204446 SH 5 OF 6	0 0

[100,102] ISSI4 .CHT

Monenco

SPECIFICATION SHEET

CLIENT: ENERGY, MINES, + RESOURCES CAN.	
PROJECT: PP3 INSTR. PH 1	WORK ORDER: DSS 8279-3
PURCHASE ORDER NO.:	CONTRACT NO.: 03SQ23440591812
SUPPLIER:	MANUFACTURER:

11. AC distribution wiring to be #14 AWG stranded copper conductor, type TEW, thermoplastic moulation rated at 600V, 105°C.

12. Signal wiring including 24 volt dc and 10 volt dc to be #18 AWG stranded copper conductor, type TEW, thermoplastic moulation rated at 600V, 105°C unless otherwise noted on drawings.

13. Thermocouple signal wire to be Type JX extension wire, #18 AWG, 105°C extruded PVC insulation rated for 300 volts.

14. Wire colours to be as follows:

Signal wire - blue
24 volts dc - blue
10 volts dc - blue
thermocouple - white/red
115 volts ac - black
ground - green
neutral - white.

15. Connectors for plug connection of field cables to panel instruments or between panel instruments do not require intermediate terminals except as noted on connection drawings.

16. Provide nameplates for panel front as per engraving schedule. Also tag instruments with instrument number at rear of panel as indicated on connection diagrams.
Nameplate sizes: Size 1 - 12 mm high letters
Size 2 - 8 mm high letters
Size 3 - 5 mm high letters

REV. NO.	DATE	DESCRIPTION	DES. BY	APP. BY	MECH./PROCESS	PIPING
0	[illegible]	ISSUED FOR FINAL	MF			

MANUFACTURER'S DRAWING NO.:

NOTES: [illegible]

DESIGNED BY / DATE	APPROVED BY / DATE	SPEC. SHEET NO.:	REV.
[illegible] /09/86		204446 SH 6 OF 6	0 0

[100, 102] ISS14 .CHT

Monenco

HAND SWITCH SPECIFICATION SHEET

CLIENT: ENERGY, MINES & RESOURCES CANADA.	
PROJECT: PP3 INSTR. PHASE I	WORK ORDER: DSS8270-3.
PURCHASE ORDER NO.:	CONTRACT NO.: 03SQ 23440 59182
SUPPLIER:	MANUFACTURER:

1. Tag No: SEE LIST- SHT 2
2. Service: VALVE CONTROL MOSAIC GRAPHIC
3. Panel Ref: INSTR PANEL A1
4. Type: Mechanical ☒ Solid State ☐
5. Operator: Toggle ☐ Pushbutton ☐ Selector ☒ Key ☐ Paddle ☐ Rocker ☐ Slide ☐ Other ______
6. Action: Maintained ☒ Momentary ☐
7. Positions: Two ☒ Three ☐ Other ______
8. Mounting: Flush ☐ Surface ☐ Terminal Block ☐ Mosaic ☒
10. Contact Rating: 3 Amps 110 Volts 60 Hz
11. Load: Inductive ☒ Non Inductive ☐
12. Form: SPST ☐ SPDT ☒ DPDT ☐ Other: See 21
13. Terminations: Screw ☐ Solder ☐
14. Contacts: Silver ☐ Gold ☐ Other ______
15. Lights: Nonlighted ☐ Neon ☒ Incandescent ☐
16. Light Circuit: Integral ☒ Isolated ☐
17. Seal: NEMA 1 Oil Tight ☐
18. Manufacturer: TO SUIT MOSAIC
19. Model No.:

20. Legend:

CLOSE / OPEN

21. Contact Block - N/A

o—||—o					
o—||—o					

MANUFACTURER'S DRAWING NO.:

NOTES:
E204461 ITEM 22.

REV. NO.	DATE	DESCRIPTION	DES. BY	APP. BY	MECH./PROCESS	PIPING
	09/86	PH 1 FINAL		[illegible]		

DESIGNED BY / DATE	APPROVED BY / DATE	SPEC. SHEET NO.	REV.
PIERSOL	WAP.	204460 SHT 1 OF 2	0 0

Monenco

SPECIFICATION SHEET

CLIENT: ENERGY, MINES, + RESOURCES CAN.

PROJECT: PP3 INSTR. PH 1	WORK ORDER: DSS 8279-3
PURCHASE ORDER NO.:	CONTRACT NO.: 03SQ23440591 82
SUPPLIER:	MANUFACTURER:

TAG NO. LIST

ITEM	TAG	ITEM	TAG
1	KS0001	29	HS0028
2	HS0070A	30	HS0029
3	HS0072A	31	HS0030
4	HS0068A	32	HS0061
5	HS0079A	33	HS0062
6	HS0078A	34	HS0063
7	HS0076A	35	HS0053
8	HS0074A	36	HS0054
9	HS0082A	37	HS0055
10	HS0080A	38	12HS0001/A
11	HS0019		
12	HS0020		
13	HS0021		
14	HS0011		
15	HS0012		
16	HS0013		
17	HS0003		
18	HS0004		
19	HS0005		
20	HS0048		
21	HS0049		
22	HS0050		
23	HS0044		
24	HS0045		
25	HS0046		
26	HS0036		
27	HS0037		
28	HS0038		

REV. NO.	DATE	DESCRIPTION	DES. BY	APP. BY	MECH./PROCESS	PIPING
0	09/86	PH 1 FINAL	GP	[illegible]		

MANUFACTURER'S DRAWING NO.:

NOTES:

DESIGNED BY / DATE	APPROVED BY / DATE	SPEC. SHEET NO.:	REV.
Ruome	WAP.	204460 SHT 2 OF 2	0 0

[100,102]ISSI4 .CHT

Monenco

HAND SWITCH SPECIFICATION SHEET

CLIENT: ENERGY, MINES & RESOURCES CANADA.	
PROJECT: PP3 INSTR. PHASE I	WORK ORDER: DSS8270-3
PURCHASE ORDER NO.:	CONTRACT NO.: 03SQ23440 59182
SUPPLIER:	MANUFACTURER:

1. Tag No: SEE BELOW
2. Service: PUMP SPEED SELECTOR SWITCH
3. Panel Ref: INST. PANEL A1
4. Type: Mechanical ☒ Solid State ☐
5. Operator: Toggle ☐ Pushbotton ☐ Selector ☒ Key ☐ Paddle ☐ Rocker ☐ Slide ☐ Other ______
6. Action: Maintained ☒ Momentary ☐
7. Positions: Two ☒ Three ☐ Other ______
8. Mounting: Flush ☒ Surface ☐ Terminal Block ☐ Mosaic ☐
10. Contact Rating: 1 Amps 110 Volts 60 Hz
11. Load: Inductive ☐ Non Inductive ☒
12. Form: SPST ☐ SPDT ☐ DPDT ☒ Other: See 21
13. Terminations: Screw ☒ Solder ☐
14. Contacts: Silver ☐ Gold ☐ Other ______
15. Lights: Nonlighted ☐ Neon ☐ Incandescent ☐
16. Light Circuit: Integral ☐ Isolated ☐
17. Seal: NEMA 1 Oil Tight ☐
18. Manufacturer: To be selected by Panel Vendor
19. Model No.:

20. Legend: LOCAL / COMPUTER

21. Contact Block — N/A.

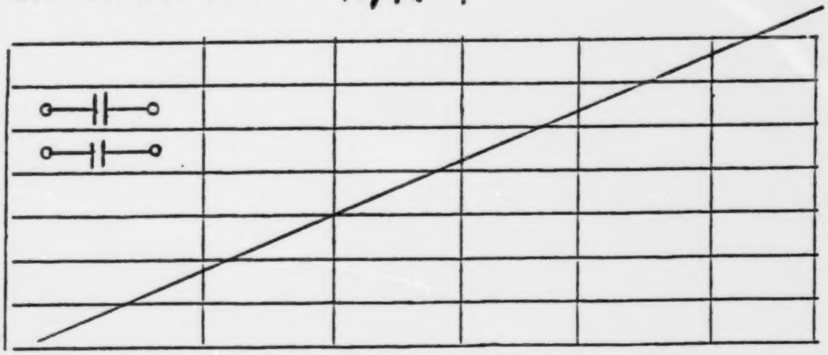

204457 ITEM 4

REV. NO.	DATE	DESCRIPTION	DES. BY	APP. BY	MECH./PROCESS	PIPING
0	09/86	PH 1 FINAL	WP	WP.		

MANUFACTURER'S DRAWING NO.:

NOTES:
01HS0002 07HS0002
01HS0004 07HS0003
08HS0001
08HS0002

DESIGNED BY / DATE	APPROVED BY / DATE	SPEC. SHEET NO.:	REV.
PIERSOL	WAP.	204459	00

Monenco MOSAIC TILE GRAPHIC DISPLAY SYSTEM

SPECIFICATION SHEET

Energy, Mines and Resources Canada	
PROJECT: PP3 Instrument Ph. 1	WORK ORDER: DSS 8279-3
PURCHASE ORDER NO.:	CONTRACT NO.: 03SQ23440-5-9182
SUPPLIER:	MANUFACTURER:

1. Assembly for flush mounting in panel.
2. Self-supporting metal frame.
3. Mosaic tiles 24 mm x 24 mm square, removable, and completely independent of supporting structure to allow changes.
4. Modular flexible design to permit changes.
5. Flow lines and symbols printed on tiles, indelible, washable, resistant to ultraviolet light, non reflective, anti-static, and self-extinghishing.
6. Selector switches incorporated in grid; removable from front (see separate spec sheet). Possible to move switches if necessary without modifications to the grid.
7. Smooth regular surface.
8. Wiring support provided at rear of grid for selector switches and component connection.
9. Colours, line thickness, layout, etc., per Monenco's drawing.
10. CSA approved.
11. CUSCO, SAMCO, or approved equal.

MANUFACTURER'S DRAWING NO.:

NOTES:
1. Applies to mimics in panel A1 & A2

REV. NO.	DATE	DESCRIPTION	DES. BY	APP. BY	MECH./PROCESS	PIPING
1	09/86	PH 1 FINAL	WP	WS		
		Preliminary	W.P.			

DESIGNED BY / DATE	APPROVED BY / DATE	SPEC. SHEET NO.:	REV.
Piercol 7/7/86	WAP	204433	01

204433

Monenco

POTENTIOMETER SPECIFICATION SHEET

CLIENT: Energy, Mines and Resources Canada	
PROJECT: PP3 Instrument Ph. 1	WORK ORDER: DSS 8279-3
PURCHASE ORDER NO.:	CONTRACT NO.: 03SQ2344059182
SUPPLIER:	MANUFACTURER:

1. Tag No. - see below.
2. Service - Pump Speed Control.
3. 10 turn, 0 - 5,000 ohm, linear.
4. Turns counting dial or integral digital or analog readout.
5. Panel mounting.
6. Nominal resolution: 0.030%.
7. Repeatability: 0.1% of voltage ratio.
8. 1.5 watts minimum.
9. Operating temperature range: -25°C to 85°C.
10. Accuracy: by vendor.
11. Bourns or approved equal.

TAG NUMBERS:

01SC0002
~~01SC0005~~
01SC0004
~~01SC0006~~
08SC0001
08SC0002
~~07SC0002~~
~~07SC0003~~
~~08SK0002~~ 07SK0002/A
~~08SK0003~~ 07SK0003/A

MANUFACTURER'S DRAWING NO.:

NOTES:
1. Applies to panel A1, Item No. 5.

REV. NO.	DATE	DESCRIPTION	DES. BY	APP. BY	MECH./PROCESS	PIPING		
	03/86	PH 1 FINAL	W.P.	[illegible]				
		Preliminary	W.P.					

DESIGNED BY / DATE	APPROVED BY / DATE	SPEC. SHEET NO.:		REV.
Piersol 7/7/86	[signature]	204461	204461	C1

[100,102]ISS14 .CHT

Monenco

DIGITAL CLOCK SPECIFICATION SHEET

CLIENT: Energy, Mines and Resources	
PROJECT: PP3 Instrument Ph. 1	WORK ORDER: DSS 8279-3
PURCHASE ORDER NO.:	CONTRACT NO.: 03SQ23440-5-9192
SUPPLIER:	MANUFACTURER:

1. Tag No. - not applicable.
2. Service - time indication.
3. 24 hour digital readout; hours:minutes.
4. Flush mounting on panel front.
5. Display to be LED, LCD, or target type.
6. Number size 1/2" high minimum.
7. Accuracy: general commercial quality.
8. Asjustments: reset of hours and minutes.
9. CSA approved.
10. Power supply: 110 Volts, 60 Hz.

REV. NO.	DATE	DESCRIPTION	DES. BY	APP. BY	MECH./PROCESS	PIPING	
	09/86	PH 1 FINAL	WAP	[illegible]			
0		Preliminary	W.P.				

MANUFACTURER'S DRAWING NO.:

NOTES:

1. Panel A1, Item 6.

DESIGNED BY / DATE	APPROVED BY / DATE	SPEC. SHEET NO.:	REV.
Piersol 7/7/86	WAP	204462	01

(100,102)ISS14 .CHT

Monenco

DC POWER SUPPLIES
SPECIFICATION SHEET

ENERGY, MINES, + RESOURCES CAN.	
PROJECT: PP3 INSTR. PH 1	WORK ORDER: DSS 8279-3
PURCHASE ORDER NO.:	CONTRACT NO.: 03SQ23440S9182
SUPPLIER:	MANUFACTURER:

1. Service: Panel Al instrument power.
2. Quantity: As required.
3. Input: 105-125 VAC, 1 phase, 60 Hz.
4. Output: (a) 24 volts dc,
   (b) 10 volts dc.
5. Features:
   - line regulation,
   - short circuit and overload protection,
   - current limiting,
   - input power fusing,
   - ripple less than 5 MV peak-to-peak,
   - loading as per panel requirements. Panel vendor to choose.
6. Manufacturers: GFC Hammond GFOF-1 Series,
   Acromag, Moore Industries, or equal.

REV. NO.	DATE	DESCRIPTION	DES. BY	APP. BY	MECH./PROCESS	PIPING
[illegible]	[illegible]	[illegible] FINAL	[illegible]	[illegible]		

MANUFACTURER'S DRAWING NO.:

NOTES:

DESIGNED BY / DATE	APPROVED BY / DATE	SPEC. SHEET NO.:	REV.
Piersol /09-30		204463.	0 0

[100,102]ISSI4 .CHT

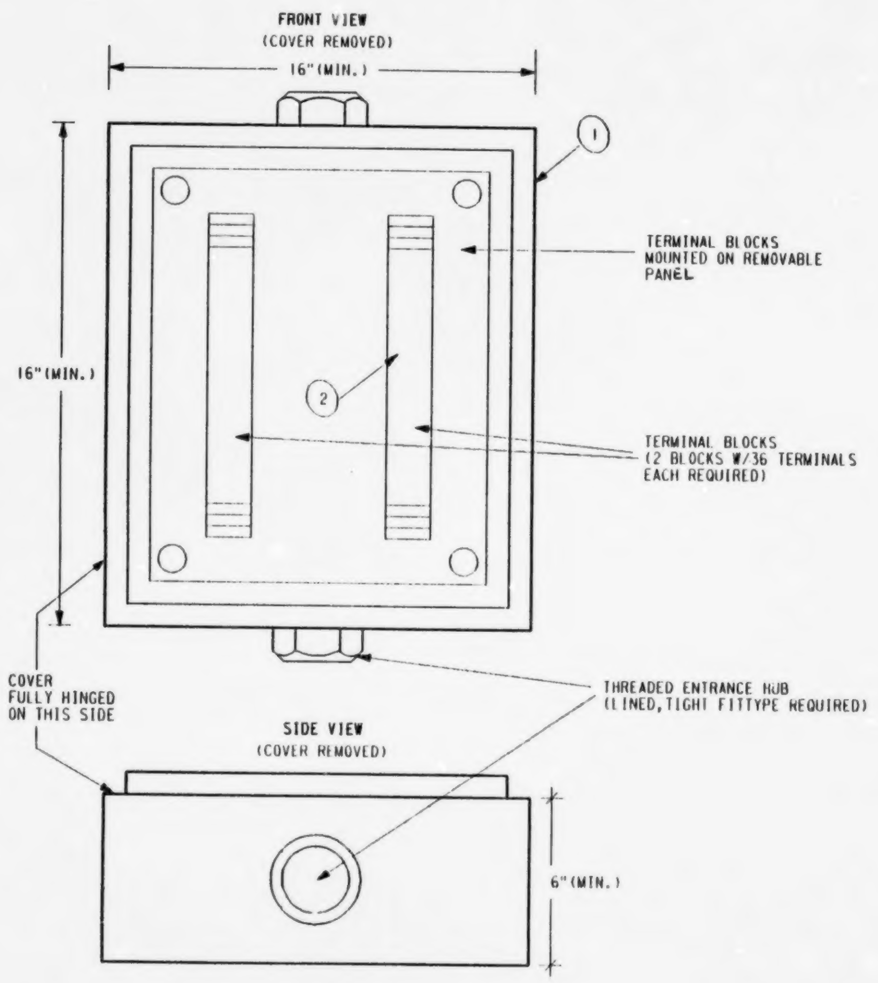

BILL OF MATERIAL

1. EEMAC 1,14 GAUGE SHEET STEEL JUNCTION BOX WITH WELDED SEAMS,NEOPRENE GASKETED COVER AND REMOVABLE PLATFORM TYPE TERMINAL STRIP MOUTING PANEL.
   THERMO ELECTRIC 20-5 OR EQUIVALENT.
2. TERMINAL BLOCK WITH THERMOCOUPLE MATERIAL CONTACT TERMINALS.EACH TERMINAL BLOCK SHALL BE A SINGLE BLOCK WITH ALTERNATING CONTACT TERMINALS OF IRON,CONSTANTAN AND BRASS.
   THERMO ELECTRIC 3225-A-18-1/C/BR OR EQUIVALENT.
3. JUNCTION BOX IDENTIFICATION:

JB1A	JB3E
JB1B	JB3F
JB2A	JB3G
JB3A	JB3H
JB3B	JB4A
JB3C	JB4B
JB3D	

REV	DATE	DESCRIPTION	CHK	MEC APP	EMR APP
00	86.9	PH.1 FINAL	CP	GN	

Energy,Mines and Resources Canada — Energie,Mines et Ressources Canada

THERMOCOUPLE JUNCTION BOX
BASIC LAYOUT

EMR COPROCESSING PILOT PLANT
PP3

DRAWN	CAD	DATE	86.09.1?
CHKD			REV
DESIGN			00

LOOP

Monenco Consultants Limited | WORK ORDER No. DSS 8279-3 | REG. No. 204311

INDEX	DRAWING NO.	SHEET NO.
INDEX	B204491	
FRONT LAYOUT	204492	
MIMIC LAYOUT	204487	
MATERIAL LIST	B204493	

INDEX	DRAWING NO.	SHEET NO.
CONNECTION DIAGRAM	204494	
INSTRUMENT SPECIFICATION SHEET-HANDSWITCHES	204497	
-MOSAIC GRID SYSTEM	204433	
PANEL A2 SPECIFICATION SHEET	204447	

NOTES:

1. FOR CONTROL PANEL SPECIFICATION SEE SPECIFICATION No. 82793-1

REV.	DATE	DESCRIPTION	BY	I/C	PIPING	MECH./PROC.	ELECT.	CIVIL	APPR.
01	16 09.86	PH. I FINAL	W.P.	W.P.					
0	20 06.86	PRELIMINARY	W.P						

APPROVALS

WO. DSS8279-3
DESIGNED: PIERSOL
DATE: JUNE 86
DRAWN:
DATE:
SUPV.:
DATE:
PASSED: Piersol
DATE: Sept 86
APPROVED:
DATE:

ENERGY, MINES and RESOURCES CANADA
COPROCESSING PILOT PLANT PP3
CONTROL PANEL INDEX SHEET
VALVE SWITCH PANEL A2
Monenco:
B204491 REGISTRY No.
01 REV.

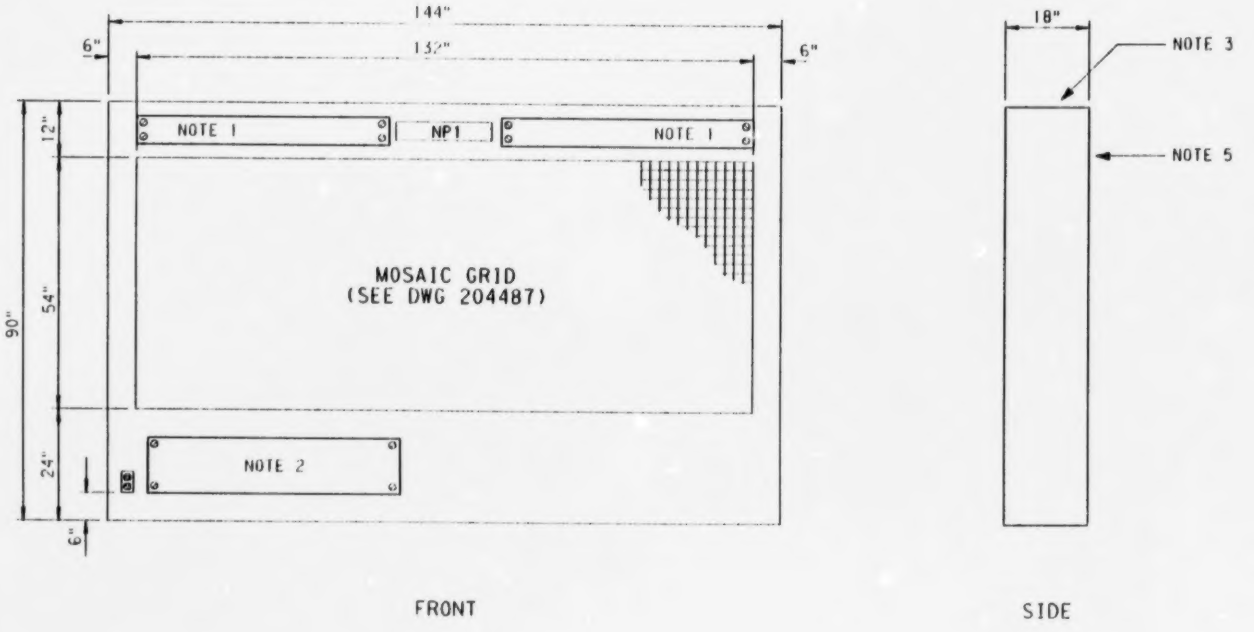

NOTES:

1. FRONT ACCESS TO FIELD WIRING TERMINAL BLOCKS.
2. FRONT ACCESS TO POWER WIRING TERMINAL BLOCKS.
3. REMOVABLE GLAND PLATE FOR TOP ENTRY OF CABLES.
4. NP1 LEGEND: (SIZE 1). "PP3 VALVE SWITCH PANEL A2"
5. REMOVABLE REAR COVER.
6. SEE SPEC. SHEET 204447 FOR CONSTRUCTION REQUIREMENTS.

REFERENCE DRAWINGS:

SEE INDEX SHEET B204491

REV	DATE	DESCRIPTION	CHK	MEC APP	EMR APP
01	16 09.86	PH. 1 FINAL	CP		
00	20 06.86	PRELIMINARY			

Energy, Mines and Resources Canada — Énergie, Mines et Ressources Canada

VALVE SWITCH PANEL A2
FRONT LAYOUT
SHEET 1 of 1

EMR COPROCESSING PILOT PLANT
PP3

SCALE 1/2" = 1'0"
DRAWN V.MUELLER DATE 86.06.16
CHKD
DESIGN W.PIERSOL REV 01

Monenco Consultants Limited | WORK ORDER No. DSS 8279-3 | REG. No. 204492

1	2	3	4	5	6	7	8	9	10	11	12	13	14
ITEM NO.	DESCRIPTION	TAG NO.	TYPE	MANUFAC-TURER	MODEL NO.	QUANTITY	MOUNTING LOCATION				SUPPLIED BY	INSTRUMENT SPEC. SHEET NO.	REMARKS
1	MOSAIC GRID SYSTEM			SAMCO CUSCO	24MM X24MM	54"X132"	PANEL FRONT				PANEL VENDOR		SEE MIMIC LAYOUT 204487
2	HAND SWITCH	SEE MIMIC LAYOUT	SELECTOR	WITH GRID		37	IN MOSAIC GRID				PANEL VENDOR	204497	

NOTES:

SEE INDEX SHEET B204491

REV.	DATE	DESCRIPTION	BY	I/C	PIPING	MECH./PROC.	ELECT.	CIVIL	APPR.
01	16 09.86	PH. 1 FINAL	W.P						
0	20 06.86	PRELIMINARY	W.P						

APPROVALS

WO. DSS8279-3

DESIGNED: PIERSOL
DATE: JUNE 86
DRAWN:
DATE:
SUPV.:
DATE:
PASSED: [signature]
DATE: Sept 86
APPROVED:
DATE:

ENERGY, MINES and RESOURCES CANADA

COPROCESSING PILOT PLANT PP3

CONTROL PANEL MATERIAL LIST
VALVE SWITCH PANEL A2

Monenco:

B204493 REGISTRY No.

01 REV.

PANEL A2

Monenco

CONTROL PANELS SPECIFICATION SHEET

SHEET 1 OF 2

CLIENT: ENERGY, MINES & RESOURCES CANADA	
PROJECT: PP3 INSTR. PHASE 1	WORK ORDER: DSS8279-3
PURCHASE ORDER NO.:	CONTRACT NO.: 03SQ23440-59182
SUPPLIER:	MANUFACTURER:

GENERAL

1 APPLICABLE TO: ☒ PROPOSAL ☐ PURCHASE ☐ AS BUILT

2 SERVICE: PP3 VALVE CONTROL EQUIPMENT NO. PANEL A2

3 PANEL TYPE: ☐ CONSOLE ☐ DESK ☒ PANEL ☐ WALL

4 PANEL CLASSIFICATION: EEMAC 1

5 AREA CLASSIFICATION: ☒ NON-HAZARDOUS ☐ HAZARDOUS CLASS ____ GROUP ____ DIV ____

6 ENVIRONMENT: AMBIENT TEMPERATURE: MIN ____ MAX ____ NORMAL 20 °C

7 HUMIDITY: MIN ____ MAX ____ NORMAL 40 %

8 ALTITUDE: 300 (ft)

9 REMARKS:

10 HEAT DISSIPATION: ____ KW ☐ NATURAL VENTILATION ☒ FORCED VENTILATION

11 DETAILS: SIZED BY PANEL FABRICATOR - C/W [illegible]

12 ADDITIONAL STANDARDS: C22.2 [illegible]

13 REMARKS: CSA CERTIFICATION REQUIRED

CONSTRUCTION

14 MATERIAL: ☒ STEEL ☐ OTHER

15 VIBRATION MOUNTINGS: ☒ NO ☐ YES

16 GLASS FRONTED DOORS: ☒ NO ☐ YES

17 GRAPHIC MIMIC: TYPE: CONSTRUCTION:

18 ☒ STATIC ☐ PAINTED ☐ LAMINATED PLASTIC ☐ BACKLIGHTED

19 ☐ SEMI GRAPHIC ☐ MYLAR ☒ MODULAR ☒ FRONT/~~REAR~~ ENGRAVED

20 ☐ FULL GRAPHIC ☐ OTHER

21 MIMIC COLOURS: -

22 MIMIC SYMBOLS: SEE DWG 204487

23 REMARKS:

24 PAINTING: INTERIOR: ☐ WHITE SEMI GLOSS ☐ OTHER

25 EXTERIOR: COLOUR ANSI/ASA 61 GREY BAKED [illegible] ENAMEL

26 SPECIAL PAINT FINISH

27 REMARKS: SEE SHEET

~~TUBING~~

NOT APPLICABLE

28 ~~INSTRUMENT AIR SUPPLY:~~

29 ~~BULKHEAD FITTINGS: ☐ TOP ☐ BOTTOM~~

30 ~~TUBING MATERIALS: ☐ COPPER ☐ PVC COATED COPPER ☐ POLYETHYLENE~~

31 ~~AIR HEADER: ☐ REQUIRED ☐ NOT REQUIRED~~

32 ~~SIZE: ☐ 25MM ☐ 40MM ☐ 50MM~~

33 ~~FILTER/REGULATOR: ☐ ONE ☐ TWO~~

34 ~~REGULATOR SETTING ____ RELIEF VALVE SETTING ____~~

35 ~~DIRECT CONNECTED GAUGES: ☐ YES ☐ NO TUBING MATERIALS ____~~

36 ~~REMARKS:~~

REV. NO.	DATE	DESCRIPTION	DES. BY	APP. BY	MECH./PROCESS	PIPING
	[illegible]	FINAL	DP	[illegible]		

MANUFACTURER'S DRAWING NO.:

NOTES:

DESIGNED BY / DATE	APPROVED BY / DATE	SPEC. SHEET NO.:
PIERSON 09/86		204447 SH 1 OF 4

(100,102)ISS40 .CHT

Monenco

CONTROL PANELS SPECIFICATION SHEET

SHEET 2 OF 2

CLIENT: ENERGY, MINES & RESOURCES CANADA.	
PROJECT: PP3 INSTR. PHASE 1	WORK ORDER: DSS 8279-3
PURCHASE ORDER NO.:	CONTRACT NO.: 035Q 23440 59182
SUPPLIER:	MANUFACTURER:

ELECTRICAL ARRANGEMENTS

37 POWER SUPPLIES: VOLTS/FREQ.: (1) [illegible] (2) ____ (3) ____ (4) ____
38 USE ____
39 CABLE ENTRY: ☒ TOP ☐ BOTTOM
40 TERMINAL BLOCKS: TYPE: WEIDMULLER SAKURA ETC.
41 INTERIOR LIGHTING: ☐ REQUIRED DETAILS NOT REQ'D
42 CONVENIENCE OUTLETS: ☐ REQUIRED DETAILS NOT REQ'D
43 WIRING IN HAZARDOUS AREAS: ☐ EXPLOSION PROOF ☐ PURGED ☐ INTRINSICALLY SAFE
44 DETAILS ____
45 ~~TELEPHONE JACKS:~~ ~~☐ REQUIRED DETAILS~~ ____
46 ~~HEATER:~~ ~~☐ REQUIRED DETAILS~~ ____
47 REMARKS: FRONT ACCESS ONLY. SEE SHEET 3

TESTING & SHIPPING DETAILS

48 SHIPPING: ☒ DOMESTIC ☐ OVERSEAS PACKING REQUIREMENTS ____
49
50 ☐ SHIPPED AS ONE PANEL ☒ DIVIDED FOR SHIPPING SHIPPING DIVISION ____
51 MAX UNCRATED SECTION SIZE PER #53
52 ASSEMBLED WEIGHT ____ KG. (LB) SHIPPING WEIGHT ____ KG. (LB)
53 DIMENSIONS: L 72 W 30 H 100 (IN)
54 TESTING: SPECIAL REQUIREMENTS 1. POINT-TO-POINT WIRING 2). ENERGISE
55 AND CHECK VOLTAGE OUTPUT 3) OWNER INSPECTION

56 REMARKS:

MANUFACTURER'S DRAWING NO.:

NOTES:

REV. NO.	DATE	DESCRIPTION	DES. BY	APP. BY	MECH./PROCESS	PIPING	
0	[illegible]	PH 1 FINAL	[illegible]	[illegible]			

DESIGNED BY / DATE	APPROVED BY / DATE	SPEC. SHEET NO.:
PIERSON 09/86		204447 SH 2 OF 4

[100, 102] ISS41 .CHT

Monenco

SPECIFICATION SHEET

ENERGY, MINES, + RESOURCES CAN.

PROJECT: PP 3 INSTR. PH 1	WORK ORDER: DSS 8279-3
PURCHASE ORDER NO.:	CONTRACT NO.: 0SQ23440S9182
SUPPLIER:	MANUFACTURER:

INSTRUMENT PANEL A2 (cont'd)

A. PANEL CONSTRUCTION

1. Panel to be prefabricated complete with mosaic graphic system and fully wired and tested in shop.

2. Fabricate panel surfaces from reinforced No. 10 gauge cold rolled steel. Provide internal framework as required for panel support and mounting of mosaic system and terminal blocks.

3. Provide panel support rails or feet under panel for 2" min. stand-off from floor surface.

4. Provide removable panels for top cable entry.

5. Provide forced ventilation system in panel with filtered air in-take for positive pressure inside panel.

B. WIRING & GROUNDING

1. Provide disconnect safety switch for main 120 volt AC power into panel as per drawings.

2. Provide fuse type terminal blocks TB1 and TB2 for 110 volt line circuits with 1 amp fuses; - Weidmuller type SAK S or equal.

3. Provide terminal blocks TB3 and TB4 for field wiring; - Weidmuller type SAK 6N or equal.

4. Provide electrical grounding in panels to meet CSA C22.1 Section 1- and C22.2 No. 4.

NO.	DATE	DESCRIPTION	DES. BY	APP. BY	MECH./PROCESS	PIPING
	09/86	PH 1 FINAL	WP	[illegible]		

MANUFACTURER'S DRAWING NO.:

NOTES:

DESIGNED BY / DATE	APPROVED BY / DATE	SPEC. SHEET NO.	REV.
PIERSOL / 09/86		204447 SH 3 OF 4	0 0

(100, 102) ISSN .CHT

Monenco

SPECIFICATION SHEET

CLIENT: ENERGY, MINES, + RESOURCES CAN.	
PROJECT: PP 3 INSTR. PH 1	WORK ORDER: DSS 8279-3
PURCHASE ORDER NO.:	CONTRACT NO.: 03SQ23440 59182
SUPPLIER:	MANUFACTURER:

5. Install power ground bus in panel with lug for No. 2 AWG incoming ground wire.

6. Wiring to be in exact accordance with connection diagram. Identify terminals and wires as shown.

7. Wiring to be #14 AWG stranded copper type TEW rated at 600V, 105°C. Wire colours to be as follows:

115VAC (line) - black
neutral - white
ground - green

8. Tag switches at rear of panel with switch number as per connection diagram.

9. Submit panel fabrication drawings and mimic engraving drawing for approval before manufacture.

REV. NO.	DATE	DESCRIPTION	DES. BY	APP. BY	MECH./PROCESS	PIPING
0	09/86	PH 1 FINAL	WP	[illegible]		

MANUFACTURER'S DRAWING NO.:

NOTES:

DESIGNED BY / DATE	APPROVED BY / DATE	SPEC. SHEET NO.:	REV.
P.Ersol / 09-86		204447 SHT 4 of 4	0 0

Monenco MOSAIC TILE GRAPHIC DISPLAY SYSTEM

SPECIFICATION SHEET

CLIENT: Energy, Mines and Resources Canada	
PROJECT: PP3 Instrument Ph. 1	WORK ORDER: DSS 8279-3
PURCHASE ORDER NO.:	CONTRACT NO.: 03SQ23440-5-9182
SUPPLIER:	MANUFACTURER:

1. Assembly for flush mounting in panel.
2. Self-supporting metal frame.
3. Mosaic tiles 24 mm x 24 mm square, removable, and completely independent of supporting structure to allow changes.
4. Modular flexible design to permit changes.
5. Flow lines and symbols printed on tiles, indelible, washable, resistant to ultraviolet light, non reflective, anti-static, and self-extinghishing.
6. Selector switches incorporated in grid; removable from front (see separate spec sheet). Possible to move switches if necessary without modifications to the grid.
7. Smooth regular surface.
8. Wiring support provided at rear of grid for selector switches and component connection.
9. Colours, line thickness, layout, etc., per Monenco's drawing.
10. CSA approved.
11. CUSCO, SAMCO, or approved equal.

MANUFACTURER'S DRAWING NO.:

NOTES:
1. Applies to mimics in panel A1 & A2

REV. NO.	DATE	DESCRIPTION	DES. BY	APP. BY	MECH./PROCESS	PIPING
1	09/86	PH 1 FINAL	WP	[illegible]		
0		Preliminary	W.P.			

DESIGNED BY / DATE	APPROVED BY / DATE	SPEC. SHEET NO.:		REV.
Piersol 7/7/86	WAP	204433	204433	01

[100,102]ISSI4 .CHI

Monenco

HAND SWITCH SPECIFICATION SHEET

CLIENT: ENERGY, MINES & RESOURCES CANADA.	
PROJECT: PP3 INSTR. PHASE I	WORK ORDER: DSS 8270-3
PURCHASE ORDER NO.:	CONTRACT NO.: 03SQ 23440 59182
SUPPLIER:	MANUFACTURER:

1. Tag No: SEE LIST – SHT 2.
2. Service: PANEL A2 VALVES AND PUMPS
3. Panel Ref: PANEL A2
4. Type: Mechanical ☒ Solid State ☐
5. Operator: Toggle ☐ Pushbotton ☐ Selector ☒ Key ☐ Paddle ☐ Rocker ☐ Slide ☐ Other ______
6. Action: Maintained ☒ Momentary ☐
7. Positions: Two ☒ Three ☐ Other ______
8. Mounting: Flush ☐ Surface ☐ Terminal Block ☐ Mosaic ☒
10. Contact Rating: 3 Amps 110 Volts 60 Hz
11. Load: Inductive ☒ Non Inductive ☐
12. Form: SPST ☐ SPDT ☒ DPDT ☐ Other: See 21
13. Terminations: Screw ☐ Solder ☐
14. Contacts: Silver ☐ Gold ☐ Other ______
15. Lights: Nonlighted ☐ Neon ☒ Incandescent ☐
16. Light Circuit: Integral ☒ Isolated ☐
17. Seal: NEMA 1 Oil Tight ☐
18. Manufacturer: ______
19. Model No.:

20. Legend:

SEE DWG 204497

21. Contact Block — N/A.

o—‖—o					
o—‖—o					

REV. NO.	DATE	DESCRIPTION	DES. BY	APP. BY	MECH./PROCESS	PIPING
0	09/84	[illegible] FINAL	WF	[illegible]		

MANUFACTURER'S DRAWING NO.:

NOTES:

[illegible]

DESIGNED BY / DATE	APPROVED BY / DATE	SPEC. SHEET NO.:	REV.
PIERSOL / 09-86		204497 SHT 1 OF 2	0 0

Monenco

SPECIFICATION SHEET

CLIENT: ENERGY, MINES, & RESOURCES CAN.

PROJECT: PP3 INSTR. PH 1

WORK ORDER: DSS 8279-3

PURCHASE ORDER NO.:

CONTRACT NO.: 0BSQ23440S9182

SUPPLIER:

MANUFACTURER:

HANDSWITCH LIST - PANEL A2

ITEM	TAG	ITEM	TAG
1	01HS0024/A	29	08HS0002/B
2	02HS0001/A	30	08HS0003/A
3	02HS0002/A	31	08HS0004/A
4	02HS0003/A	32	08HS0005/A
5	02HS0004/A	33	08HS0006/A
6	02HS0005/A	34	10HS0008
7	02HS0006/A	35	10HS0009
8	04HS0001/A	36	10HS0010
9	04HS0002/A	37	10HS0011
10	04HS0003/A		
11	04HS0004/A		
12	04HS0005/A		
13	04HS0006/A		
14	04HS0007/A		
15	04HS0008/A		
16	04HS0009/A		
17	04HS0010/A		
18	04HS0011/A		
19	05HS0001/A		
20	05HS0002/A		
21	05HS0003/A		
22	05HS0004/A		
23	05HS0005/A		
24	06HS0005/A		
25	07HS0005/A		
26	08HS0001/A		
27	08HS0001/B		
28	08HS0002/A		

REV. NO.	DATE	DESCRIPTION	DES. BY	APP. BY	MECH./PROCESS	PIPING
[illegible]	[illegible]	[illegible]	[illegible]	[illegible]		

MANUFACTURER'S DRAWING NO.:

NOTES:

DESIGNED BY / DATE	APPROVED BY / DATE	SPEC. SHEET NO.:	REV.
[illegible]		204497 SHT 2 OF 2	0 0

[100,102]ISSI4 .CHT

INDEX	DRAWING NO.	SHEET NO.
INDEX	B204475	
FRONT LAYOUT	204485	1
	204486	2
ENGRAVING SCHEDULE	B204478	1
	B204479	2
	B204480	3
	B204481	4
	B204482	5
	B204483	6
	B204484	7
	204418	8
MATERIAL LIST	B204477	

REFERENCE DRAWINGS	DRAWING NO.	SHEET NO.
CONNECTION DIAGRAM	204470	1
CONNECTION DIAGRAM	204471	2
CONNECTION DIAGRAM	204472	3
CONNECTION DIAGRAM	204473	4
CONNECTION DIAGRAM	204474	5
CONNECTION DIAGRAM	2044[illegible]	6
PANEL C SPECIFICATION SHEET	204449	
INSTRUMENT SPECIFICATION SHEETS-HANDSWITCH	204450	

NOTES:

REV.	DATE	DESCRIPTION	BY	I/C	PIPING	MECH./PROC.	ELECT.	CIVIL	APPR.
1	09 16.86	PH.1 FINAL	WP	WP					
0	06 20.86	PRELIMINARY	WP						

APPROVALS

WO. DSS8279-3

DESIGNED: PIERSOL
DATE: JUNE 86
DRAWN:
DATE:
SUPV.:
DATE:
PASSED: Pursell
DATE: Sept 86
APPROVED:
DATE:

ENERGY, MINES and RESOURCES CANADA

COPROCESSING PILOT PLANT PP3

CONTROL PANEL INDEX SHEET
TEMPERATURE CONTROL PANEL C

Monenco:

B204475 REGISTRY No.

01 REV.

INST./EQUIP. TAG NO.	NAMEPLATE SIZE	ORIENTATION	LOCATION	ENGRAVING
NP1	SIZE 2		SEE FRONT LAYOUT DWGS 204485/6	PREHEATER
NP2	SIZE 2		SEE FRONT LAYOUT DWGS 204485/6	REACTOR No1
NP3	SIZE 2		SEE FRONT LAYOUT DWGS 204485/6	REACTOR No2
NP4				NOT USED
NP5	SIZE 2		SEE FRONT LAYOUT DWGS 204485/6	REACTOR No3
NP6	SIZE 2		SEE FRONT LAYOUT DWGS 204485/6	LINE HEATERS
NP7	SIZE 2		SEE FRONT LAYOUT DWGS 204485/6	HOT RECEIVER
NP8				NOT USED
NP9	SIZE 1		SEE FRONT LAYOUT DWGS 204485/6	PP3 TEMPERATURE CONTROL PANEL C
NP10	SIZE 2		SEE FRONT LAYOUT DWGS 204485/6	PREH CT3 PREH 1 02TIC4005
NP11	SIZE 3		SEE FRONT LAYOUT DWGS 204485/6	PREH CT4 PREH 2 02TIC4007
NP12	SIZE 3		SEE FRONT LAYOUT DWGS 204485/6	PREH CT5 PREH 3 02TIC4009
NP13	SIZE 3		SEE FRONT LAYOUT DWGS 204485/6	PREH CT6 PREH 4 02TIC4011
NP14	SIZE 3		SEE FRONT LAYOUT DWGS 204485/6	PREH CT7 PREH 5 02TIC4013
NP15	SIZE 3		SEE FRONT LAYOUT DWGS 204485/6	RCTR1 INT CT1 ZONE 1 03TIC4009

NOTES:
SEE INDEX SHT B204475

1. NAME PLATE TYPE: LAMACOID,
LETTER SIZE: SIZES 1,2,3 SEE SPEC
TITLE COLOUR: WHITE
BACKGROUND COLOUR: BLACK

REV.	DATE	DESCRIPTION	BY	I/C	PIPING	MECH./PROC.	ELECT.	CIVIL	APPR.
1	09 16.86	PH.1 FINAL	WP	WP					
0	06 20.86	PRELIMINARY	WP						

APPROVALS

WO. DSS8279-3
DESIGNED: PIERSOL
DATE: JUNE 86
DRAWN:
DATE:
SUPV.:
DATE:
PASSED: Russel
DATE: Sept 86.
APPROVED:
DATE:

ENERGY, MINES and RESOURCES CANADA

COPROCESSING PILOT PLANT PP3

CONTROL PANEL ENGRAVING SCHEDULE
TEMPRATURE CONTROL PANEL C
SHT 1 OF 8

Monenco:

B204478 REGISTRY No.

01 REV.

INST./EQUIP. TAG NO.	NAMEPLATE SIZE	ORIENTATION	LOCATION	ENGRAVING
NP16	SIZE 3		SEE FRONT LAYOUT DWGS 204485	RCTRI INT CT2 ZONE 2 03TIC4010
NP17	SIZE 3		SEE FRONT LAYOUT DWGS 204485	RCTRI INT CT3 ZONE 3 03TIC4011
NP18	SIZE 3		SEE FRONT LAYOUT DWGS 204485	RCTRI INT CT4 ZONE 4 03TIC4012
NP19	SIZE 3		SEE FRONT LAYOUT DWGS 204485	RCTRI INT CT5 ZONE 5 03TIC4013
NP20	SIZE 3		SEE FRONT LAYOUT DWGS 204485	RCTRI INT CT6 ZONE 6 03TIC4014
NP21	SIZE 3		SEE FRONT LAYOUT DWGS 204485	RCTRI INT CT7 ZONE 7 03TIC4015
NP22	SIZE 3		SEE FRONT LAYOUT DWGS 204485	RCTRI INT CT8 ZONE 8 03TIC4016
NP23	SIZE 3		SEE FRONT LAYOUT DWGS 204485	SAMP RCTR1 PT1 BEF WW 03TIC4145
NP24	SIZE 3		SEE FRONT LAYOUT DWGS 204485	SAMP RCTR1 PT1 AFT WW 03TIC4146
NP25	SIZE 3		SEE FRONT LAYOUT DWGS 204485	SAMP RCTR1 PT1 WW 03TIC4147
NP26	SIZE 3		SEE FRONT LAYOUT DWGS 204485	SAMP RCTR1 PT3 BEF WW 03TIC4148
NP27	SIZE 3		SEE FRONT LAYOUT DWGS 204485	SAMP RCTR1 PT7 BEF WW 03TIC4149
NP28	SIZE 3		SEE FRONT LAYOUT DWGS 204485	SAMP RCTR1 PT7 AFT WW 03TIC4150
NP29	SIZE 3		SEE FRONT LAYOUT DWGS 204485	SAMP RCTR1 PT7 WW 03TIC4151
NP30	SIZE 3		SEE FRONT LAYOUT DWGS 204485	SAMP RCTR1 PT11 BEF WW 03TIC4152

NOTES: SEE B204475

1. NAME PLATE TYPE:
LETTER SIZE: — SEE SHT 1
TITLE COLOUR:
BACKGROUND COLOUR:

REV.	DATE	DESCRIPTION	BY	I/C	PIPING	MECH./PROC.	ELECT.	CIVIL	APPR.
1	09 16.86	PH. 1 FINAL	WP	[illegible]					
0	06 20.86	PRELIMINARY	WP						

APPROVALS

WO. DSS8279-3
DESIGNED: PIERSOL
DATE: JUNE 86
DRAWN:
DATE:
SUPV.:
DATE:
PASSED: Pasquale
DATE: Sept 86
APPROVED:
DATE:

ENERGY, MINES and RESOURCES CANADA

COPROCESSING PILOT PLANT PP3

CONTROL PANEL ENGRAVING SCHEDULE
TEMPERATURE CONTROL PANEL C
SHT 2 OF 8

Monenco:

B204479 REGISTRY No. — 01 REV.

INST./EQUIP. TAG NO.	NAMEPLATE SIZE	ORIENTATION	LOCATION	ENGRAVING (line 1)	ENGRAVING (line 2)
NP31	SIZE 3		SEE FRONT LAYOUT DWGS 204485	SAMP RCTR1 PT15 BEF WW	03TIC4153
NP32	SIZE 3		SEE FRONT LAYOUT DWGS 204485	SAMP RCTR1 PT15 AFT WW	03TIC4154
NP33	SIZE 3		SEE FRONT LAYOUT DWGS 204485	SAMP RCTR1 PT15 WW	03TIC4155
NP34	SIZE 3		SEE FRONT LAYOUT DWGS 204485	SAMP RCTR1 PT17 AFT WW	03TIC4156
NP35	SIZE 3		SEE FRONT LAYOUT DWGS 204485	RCTR2 INT CT1 ZONE 1	03TIC4100
NP36	SIZE 3		SEE FRONT LAYOUT DWGS 204485	RCTR2 INT CT2 ZONE 2	03TIC4101
NP37	SIZE 3		SEE FRONT LAYOUT DWGS 204485	RCTR2 INT CT3 ZONE 3	03TIC4102
NP38	SIZE 3		SEE FRONT LAYOUT DWGS 204485	RCTR2 INT CT4 ZONE 4	03TIC4103
NP39	SIZE 3		SEE FRONT LAYOUT DWGS 204485	RCTR2 INT CT5 ZONE 5	03TIC4104
NP40	SIZE 3		SEE FRONT LAYOUT DWGS 204485	RCTR2 INT CT6 ZONE 6	03TIC4105
NP41	SIZE 3		SEE FRONT LAYOUT DWGS 204485	RCTR2 INT CT7 ZONE 7	03TIC4106
NP42	SIZE 3		SEE FRONT LAYOUT DWGS 204485	RCTR2 INT CT8 ZONE 8	03TIC4107
NP43	SIZE 3		SEE FRONT LAYOUT DWGS 204485	SAMP RCTR2 PT1 BEF WW	03TIC4108
NP44	SIZE 3		SEE FRONT LAYOUT DWGS 204485	SAMP RCTR2 PT1 AFT WW	03TIC4109
NP45	SIZE 3		SEE FRONT LAYOUT DWGS 204485	SAMP RCTR2 PT1 WW	03TIC4110

NOTES: SEE B204475

1. NAME PLATE TYPE:
LETTER SIZE: SEE SHEET 1
TITLE COLOUR:
BACKGROUND COLOUR:

REV.	DATE	DESCRIPTION	BY	I/C	PIPING	MECH./PROC.	ELECT.	CIVIL	APPR.
1	09 16.86	PH. I FINAL	WP	[signature]					
0	06 20.86	PRELIMINARY	WP						

APPROVALS

WO. DSS8279-3
DESIGNED: PIERSOL DATE: JUNE 86
DRAWN: DATE:
SUPV.: DATE:
PASSED: Piersol DATE: Sept 86
APPROVED: DATE:

ENERGY, MINES and RESOURCES CANADA
COPROCESSING PILOT PLANT PP3
CONTROL PANEL ENGRAVING SCHEDULE
TEMPERATURE CONTROL PANEL C
SHT 3 OF 8

Monenco:

B204480 REGISTRY No. 01 REV.

INST./EQUIP. TAG NO.	NAMEPLATE SIZE	ORIENTATION	LOCATION	ENGRAVING																							
								5					10					15					20				
NP46	SIZE 3		SEE FRONT LAYOUT	S	A	M	P		R	C	T	R	2		P	T	4			B	E	F		W	W		
			DWGS 204485/86	0	3	T	I	C	4	1	1	1															
NP47	SIZE 3		SEE FRONT LAYOUT	S	A	M	P		R	C	T	R	2		P	T	7			A	F	T		W	W		
			DWGS 204485/86	0	3	T	I	C	4	1	1	3															
NP48	SIZE 3		SEE FRONT LAYOUT	S	A	M	P		R	C	T	R	2		P	T	7			W	W						
			DWGS 204485/86	0	3	T	I	C	4	1	1	4															
NP49	SIZE 3		SEE FRONT LAYOUT	S	A	M	P		R	C	T	R	2		P	T	1	0		B	E	F		W	W		
			DWGS 204485/86	0	3	T	I	C	4	1	1	5															
NP50	SIZE 3		SEE FRONT LAYOUT	S	A	M	P		R	C	T	R	2		P	T	1	3		B	E	F		W	W		
			DWGS 204485/86	0	3	T	I	C	4	1	1	6															
NP51	SIZE 3		SEE FRONT LAYOUT	S	A	M	P		R	C	T	R	2		P	T	1	3		W	W						
			DWGS 204485/86	0	3	T	I	C	4	1	1	7															
NP52	SIZE 3		SEE FRONT LAYOUT	S	A	M	P		R	C	T	R	2		P	T	1	5		B	E	F		W	W		
			DWGS 204485/86	0	3	T	I	C	4	1	1	8															
NP53	SIZE 3		SEE FRONT LAYOUT	S	A	M	P		R	C	T	R	2		P	T	1	5		A	F	T		W	W		
			DWGS 204485/86	0	3	T	I	C	4	1	1	8	/	A													
NP54	SIZE 3		SEE FRONT LAYOUT	S	A	M	P		R	C	T	R	2		P	T	1	5		W	W						
			DWGS 204485/86	0	3	T	I	C	4	1	1	9															
NP55	SIZE 3		SEE FRONT LAYOUT	S	A	M	P		R	C	T	R	2		P	T	7		B	E	F		W	W			
			DWGS 204485/86	0	3	T	I	C	4	1	1	2															
NP56	SIZE 3		SEE FRONT LAYOUT	S	A	M	P		R	C	T	R	2		P	T	1	3		A	F	T		W	W		
			DWGS 204485/86	0	3	T	I	C	4	1	1	6	/	A													
NP57	SIZE 3		SEE FRONT LAYOUT	S	A	M	P		R	C	T	R	2		P	T	1	7		B	E	F		W	W		
			DWGS 204485/86	0	3	T	I	C	4	1	1	9	/	A													
NP58	SIZE 3		SEE FRONT LAYOUT	C	S	T	R		I	N	T		C	T	1		Z	0	N	E		1					
			DWGS 204485/86	0	3	T	I	C	4	1	3	0															
NP59	SIZE 3		SEE FRONT LAYOUT	C	S	T	R		I	N	T		C	T	2		Z	0	N	E		2					
			DWGS 204485/86	0	3	T	I	C	4	1	3	1															
NP60	SIZE 3		SEE FRONT LAYOUT	C	S	T	R		I	N	T		C	T	3		Z	0	N	E		3					
			DWGS 204485/86	0	3	T	I	C	4	1	3	2															

NOTES: SEE B204475

1. NAME PLATE TYPE: ___
   LETTER SIZE: ___ SEE SHEET 1
   TITLE COLOUR: ___
   BACKGROUND COLOUR: ___

REV.	DATE	DESCRIPTION	BY	I/C	PIPING	MECH./PROC.	ELECT.	CIVIL	APPR.
1	09 16.86	PH.1 FINAL	WP	WP					
0	06 20.86	PRELIMINARY	WP						

APPROVALS

WO. DSS8279-3

DESIGNED: PIERSOL DATE: JUNE 86
DRAWN: DATE:
SUPV.: DATE:
PASSED: Piersol DATE: Sept 86
APPROVED: DATE:

ENERGY, MINES and RESOURCES CANADA

COPROCESSING PILOT PLANT PP3

CONTROL PANEL ENGRAVING SCHEDULE
TEMPERATURE CONTROL PANEL C
SHT 4 OF 8

Monenco:

B204481 REGISTRY NO. 01 REV.

INST./EQUIP. TAG NO.	NAMEPLATE SIZE	ORIENTATION	LOCATION	ENGRAVING
NP61	SIZE 3		SEE FRONT LAYOUT DWGS 204486	CSTR INT CT4 ZONE 4 03TIC4133
NP62	SIZE 3		SEE FRONT LAYOUT DWGS 204486	SAMP CSTR PT1 BEF WW 03TIC4135
NP63	SIZE 3		SEE FRONT LAYOUT DWGS 204486	SAMP CSTR PT1 AFT WW 03TIC4136
NP64	SIZE 3		SEE FRONT LAYOUT DWGS 204486	SAMP CSTR PT1 WW 03TIC4137
NP65	SIZE 3		SEE FRONT LAYOUT DWGS 204486	SAMP CSTR PT2 BEF WW 03TIC4138
NP66	SIZE 3		SEE FRONT LAYOUT DWGS 204486	SAMP CSTR PT3 BEF WW 03TIC4139
NP67	SIZE 3		SEE FRONT LAYOUT DWGS 204486	SAMP CSTR PT3 AFT WW 03TIC4140
NP68	SIZE 3		SEE FRONT LAYOUT DWGS 204486	SAMP CSTR PT3 WW 03TIC4141
NP69	SIZE 3		SEE FRONT LAYOUT DWGS 204486	SAMP CSTR PT4 BEF WW 03TIC4142
NP70	SIZE 3		SEE FRONT LAYOUT DWGS 204486	FEED CT1 TRANSFER 01TIC4027
NP71	SIZE 3		SEE FRONT LAYOUT DWGS 204486	FEED CT2 L SUCTION 01TIC4028
NP72	SIZE 3		SEE FRONT LAYOUT DWGS 204486	FEED CT3 R SUCTION 01TIC4029
NP73	SIZE 3		SEE FRONT LAYOUT DWGS 204486	FEED CT4 L HEAD 01TIC4030
NP74	SIZE 3		SEE FRONT LAYOUT DWGS 204486	FEED CT5 R HEAD 01TIC4031
NP75	SIZE 3		SEE FRONT LAYOUT DWGS 204486	PREH CT1 H2 PREH 02TIC4001

NOTES: SEE B204475

1. NAME PLATE TYPE:
LETTER SIZE: — SEE SHEET 1
TITLE COLOUR:
BACKGROUND COLOUR:

REV.	DATE	DESCRIPTION	BY	I/C	PIPING	MECH./PROC.	ELECT.	CIVIL	APPN.
1	09 16.86	PH.1 FINAL	WP	[signature]					
0	07 20.86	PRELIMINARY	WP						

APPROVALS

WO. DSS8279-3
DESIGNED: PIERSOL DATE: JUNE 86
DRAWN: DATE:
SUPV.: DATE:
PASSED: [signature] DATE: Sept 86
APPROVED: DATE:

ENERGY, MINES and RESOURCES CANADA

COPROCESSING PILOT PLANT PP3

CONTROL PANEL ENGRAVING SCHEDULE
TEMPERATURE CONTROL PANEL C
SHT 5 OF 8

Monenco:

B204482 REGISTRY No. — 01 REV.

INST./EQUIP. TAG NO.	NAMEPLATE SIZE	ORIENTATION	LOCATION	ENGRAVING
NP76	SIZE 3		SEE FRONT LAYOUT DWG 204486	PREH CT2 FEED 0UTLET 02TIC4002
NP77	SIZE 3		SEE FRONT LAYOUT DWG 204486	0THR CT8 DUMP LINE 02TIC4015
NP78	SIZE 3		SEE FRONT LAYOUT DWG 204486	0THR CT9 DUMP BARREL 02TIC4016
NP79	SIZE 3		SEE FRONT LAYOUT DWG 204486	HE CT1 X-0VER LINE 04TIC4002
NP80	SIZE 3		SEE FRONT LAYOUT DWG 204486	HE CT6 HCP DRAIN LINE 04TIC4011
NP81	SIZE 3		SEE FRONT LAYOUT DWG 204486	HE CT7 BEF WW T0P 04TIC4012
NP82	SIZE 3		SEE FRONT LAYOUT DWG 204486	HE CT8 WW T0P 04TIC4013
NP83	SIZE 3		SEE FRONT LAYOUT DWG 204486	HE CT9 AFT WW T0P 04TIC4014
NP84	SIZE 3		SEE FRONT LAYOUT DWG 204486	HE CT10 BEF WW B0T 04TIC4015
NP85	SIZE 3		SEE FRONT LAYOUT DWG 204486	HE CT11 WW B0T 04TIC4016
NP86	SIZE 3		SEE FRONT LAYOUT DWG 204486	HE CT12 AFT WW B0T 04TIC4017
NP87	SIZE 3		SEE FRONT LAYOUT DWG 204486	HE CT13 HE T0 DRUM 04TIC4018
NP88	SIZE 3		SEE FRONT LAYOUT DWG 204486	HE CT14 HE T0 SAMP 04TIC4019
NP89	SIZE 3		SEE FRONT LAYOUT DWG 204486	HE CT15 HE L SAMP 04TIC4020
NP90	SIZE 3		SEE FRONT LAYOUT DWG 204486	HE CT16 HE R SAMP 04TIC4021

NOTES: SEE B204475

1. NAME PLATE TYPE:
LETTER SIZE: SEE SHEET 1
TITLE COLOUR:
BACKGROUND COLOUR:

REV.	DATE	DESCRIPTION	BY
01	16 09.86	PH. 1 FINAL	W.P
0	20 06.86	PRELIMINARY	W.P

APPROVALS: I/C, PIPING, MECH./PROC., ELECT., CIVIL, APPR.

WO. DSS8279-3
DESIGNED: PIERSOL
DATE: JUNE 86
DRAWN:
DATE:
SUPV.:
DATE:
PASSED: Piersol
DATE: Sept 86
APPROVED:
DATE:

ENERGY, MINES and RESOURCES CANADA

COPROCESSING PILOT PLANT PP3

CONTROL PANEL ENGRAVING SCHEDULE
TEMPERATURE CONTROL PANEL C
SHT 6 OF 8

Monenco:

B204483 REGISTRY NO. — REV. 01

INST./EQUIP. TAG NO.	NAMEPLATE SIZE	ORIENTATION	LOCATION	ENGRAVING
NP91	SIZE 3		SEE FRONT LAYOUT DWG 204486	HE CT1 LE CONDENSER 05TIC4001
NP92	SIZE 3		SEE FRONT LAYOUT DWG 204486	HE CT3 LE TO SCRUB 05TIC4005
NP93	SIZE 3		SEE FRONT LAYOUT DWG 204486	SCB CTI W SCB TO O SCB 06TIC4001
NP94	SIZE 3		SEE FRONT LAYOUT DWG 204486	0 SCB CTI 0 SCB TO MKUP 07TIC4001
NP95	SIZE 3		SEE FRONT LAYOUT DWG 204486	GAS RECY L SUCTION LINE 08TIC4001
NP96	SIZE 3		SEE FRONT LAYOUT DWG 204486	GAS RECY R SUCTION LINE 08TIC4002
NP97	SIZE 3			NOT USED
NP98	SIZE 3		SEE FRONT LAYOUT DWG 204486	HE INT CT5 BOT 04TIC4007
NP99	SIZE 3		SEE FRONT LAYOUT DWG 204486	HE INT CT4 MIDBOT 04TIC4008
NP100	SIZE 3		SEE FRONT LAYOUT DWG 204486	HE INT CT3 MIDTOP 04TIC4009
NP101	SIZE 3		SEE FRONT LAYOUT DWG 204486	HE INT CT2 TOP 04TIC4010
NP102	SIZE 3		SEE FRONT LAYOUT DWG 204486	11TIC4001
NP103	SIZE 3		SEE FRONT LAYOUT DWG 204486	11TIC4002
NP104	SIZE 3		SEE FRONT LAYOUT DWG 204486	11TIC4003
NP105	SIZE 3		SEE FRONT LAYOUT DWG 204486	11TIC4004

NOTES: SEE B2044/5

1. NAME PLATE TYPE:
LETTER SIZE:
TITLE COLOUR: } SEE SHEET 1
BACKGROUND COLOUR:

REV.	DATE	DESCRIPTION	BY	I/C	PIPING	MECH./PROC.	ELECT.	CIVIL	APPR.
01	16 09.86	PH. 1 FINAL	W.P	WAG					
0	20 06.86	PRELIMINARY	W.P						

APPROVALS

WO. DSS8279-3
DESIGNED: PIERSOL DATE: JUNE 86
DRAWN: DATE:
SUPV.: DATE:
PASSED: [signature] DATE: Sept 86
APPROVED: DATE:

ENERGY, MINES and RESOURCES CANADA
COPROCESSING PILOT PLANT PP3
CONTROL PANEL ENGRAVING SCHEDULE
TEMPERATURE CONTROL PANEL C
SHT 7 OF 8

Monenco:

B204484 REGISTRY NO. 01 REV.

INST./EQUIP. TAG NO.	NAMEPLATE SIZE	ORIENTATION	LOCATION	ENGRAVING
NP106	SIZE 3		SEE FRONT LAYOUT DWG 204486	1 1 T I C 4 0 0 5
NP107	SIZE 3		SEE FRONT LAYOUT DWG 204486	1 1 T I C 4 0 0 6

NOTES: SEE B204475

1. NAME PLATE TYPE:
LETTER SIZE:
TITLE COLOUR:
BACKGROUND COLOUR:
(SEE SHEET 1)

REV.	DATE	DESCRIPTION	BY	I/C	PIPING	MECH./PROC.	ELECT.	CIVIL	APPR.
0	09.86	PH. 1 FINAL	W.Pierso						

WO. DSS8279-3
DESIGNED: PIERSOL
DATE: JUNE 86
DRAWN:
DATE:
SUPV.:
DATE:
PASSED: Piersol
DATE: Sept 86
APPROVED:
DATE:

ENERGY, MINES and RESOURCES CANADA

COPROCESSING PILOT PLANT PP3

CONTROL PANEL ENGRAVING SCHEDULE
TEMPERATURE CONTROL PANEL C
SHT 8 OF 8

Monenco:

B204418 (REGISTRY No.) 00 (REV.)

1	2	3	4	5	6	7	8	9	10	11	12	13	14
ITEM NO.	DESCRIPTION	TAG NO.	TYPE	MANUFAC-TURER	MODEL NO.	QUANTITY	MOUNTING LOCATION				SUPPLIED BY	INSTRUMENT SPEC. SHEET NO.	REMARKS
1	TEMPERATURE CONTROLLER	SEE LIST	PANEL MOUNT	BARBER COLEMAN	SERIES 560	30	PANEL FRONT				EMR		
2	TEMPERATURE CONTROLLER	SEE LIST	PANEL MOUNT	ATHENA	SERIES 2000	68	PANEL FRONT				EMR		
3	ON OFF POWER SWITCH		PANEL MOUNT	HONEYWELL MICROSWITCH	AML 23 OR EQUAL	98	PANEL FRONT				PANEL VENDOR	204450	
4	VENTILATION FANS & LOUVRES					AS REQUIRED					PANEL VENDOR		

NOTES:
SEE INDEX SHT B204475

REV.	DATE	DESCRIPTION	BY
01	16 09.86	PH. 1 FINAL	W.P.
0	26 06.86	PRELIMINARY	W.P.

APPROVALS: I/C, PIPING, MECH./PROC., ELECT., CIVIL, APPR.

WO. DSS8279-3
DESIGNED: PIERSOL DATE: JUNE 86
DRAWN: DATE:
SUPV.: DATE:
PASSED: [signature] DATE: Sept 86
APPROVED: DATE:

ENERGY, MINES and RESOURCES CANADA
COPROCESSING PILOT PLANT PP3
CONTROL PANEL MATERIAL LIST
TEMPERATURE CONTROL PANEL C

Monenco:

B204477 (REGISTRY NO.) REV. 01

Monenco

CONTROL PANELS SPECIFICATION SHEET

SHEET 1 OF 2

CLIENT: ENERGY, MINES & RESOURCES CANADA.	
PROJECT: PP3 INSTR. PHASE 1	WORK ORDER: DSS8279-3
PURCHASE ORDER NO.:	CONTRACT NO.: 03SQ23440-59182
SUPPLIER:	MANUFACTURER:

GENERAL

1 APPLICABLE TO: ☒ PROPOSAL ☐ PURCHASE ☐ AS BUILT

2 SERVICE: TEMPERATURE CONTROL EQUIPMENT NO. PANEL C

3 PANEL TYPE: ☐ CONSOLE ☐ DESK ☒ PANEL ☐ WALL

4 PANEL CLASSIFICATION: EEMAC 1

5 AREA CLASSIFICATION: ☒ NON-HAZARDOUS ☐ HAZARDOUS CLASS ____ GROUP ____ DIV ____

6 ENVIRONMENT: AMBIENT TEMPERATURE: MIN ____ MAX ____ NORMAL 20 °C

7 HUMIDITY: MIN ____ MAX ____ NORMAL 45 %

8 ALTITUDE: 300 ~~m~~(ft)

9 REMARKS:

10 HEAT DISSIPATION: ____ KW ☐ NATURAL VENTILATION ☒ FORCED VENTILATION

11 DETAILS: SIZED BY PANEL FABRICATOR – C/W SWITCH

12 ADDITIONAL STANDARDS: C299.4

13 REMARKS: CSA CERTIFICATION REQUIRED.

CONSTRUCTION

14 MATERIAL: ☒ STEEL ☐ OTHER

15 VIBRATION MOUNTINGS: ☒ NO ☐ YES

16 GLASS FRONTED DOORS: ☒ NO ☐ YES

17 ~~GRAPHIC MIMIC: TYPE: CONSTRUCTION:~~

18 ~~☐ STATIC ☐ PAINTED ☐ LAMINATED PLASTIC ☐ BACKLIGHTED~~

19 ~~☐ SEMI GRAPHIC ☐ MYLAR ☐ MODULAR ☐ FRONT/REAR ENGRAVED~~

20 ~~☐ FULL GRAPHIC ☐ OTHER~~

21 ~~MIMIC COLOURS:~~

22 ~~MIMIC SYMBOLS:~~

23 REMARKS:

24 PAINTING: INTERIOR: ☒ WHITE SEMI GLOSS ☐ OTHER

25 EXTERIOR: COLOUR ANSI/ASA 61 GREY BAKED RECOATABLE ENAMEL

26 SPECIAL PAINT FINISH

27 REMARKS: SEE 204446 SHT. 3

TUBING

28 ~~INSTRUMENT AIR SUPPLY:~~

29 ~~BULKHEAD FITTINGS: ☐ TOP ☐ BOTTOM~~

30 ~~TUBING MATERIALS: ☐ COPPER ☐ PVC COATED COPPER ☐ POLYETHYLENE~~

31 ~~AIR HEADER: ☐ REQUIRED ☐ NOT REQUIRED~~

32 ~~SIZE: ☐ 25MM ☐ 40MM ☐ 50MM~~

33 ~~FILTER/REGULATOR: ☐ ONE ☐ TWO~~

34 ~~REGULATOR SETTING ____ RELIEF VALVE SETTING~~

35 ~~DIRECT CONNECTED GAUGES: ☐ YES ☐ NO TUBING MATERIALS:~~

36 ~~REMARKS:~~

REV. NO.	DATE	DESCRIPTION	DES. BY	APP. BY	MECH./PROCESS	PIPING	
	[illegible]	[illegible] FINAL	[illegible]	[illegible]			

MANUFACTURER'S DRAWING NO.:

NOTES:

DESIGNED BY / DATE	APPROVED BY / DATE	SPEC. SHEET NO.:
PIERSOL / [illegible]		204449 SH 1 OF 2

(100,102)ISS40 .CHT

PANEL C

Monenco

CONTROL PANELS SPECIFICATION SHEET

SHEET 2 OF 2

CLIENT: ENERGY, MINES & RESOURCES CANADA.	
PROJECT: PP3 INSTR. PHASE 1	WORK ORDER: DSS 8279-3
PURCHASE ORDER NO.:	CONTRACT NO.: 03SQ23440 59182
SUPPLIER:	MANUFACTURER:

ELECTRICAL ARRANGEMENTS

37 POWER SUPPLIES: VOLTS/FREQ.: (1) 115/60 (2) ______ (3) ______ (4) ______
38 USE MAIN FIRE
39 CABLE ENTRY: ☒ TOP ☐ BOTTOM
40 TERMINAL BLOCKS: TYPE: WEIDMULLER SAK 2.5 ETC
41 INTERIOR LIGHTING: ☒ REQUIRED DETAILS FLUORESCENT [illegible]
42 CONVENIENCE OUTLETS: ☒ REQUIRED DETAILS SEE DWGS.
43 WIRING IN HAZARDOUS AREAS: ☐ EXPLOSION PROOF ☐ PURGED ☐ INTRINSICALLY SAFE
44 DETAILS
45 ~~TELEPHONE JACKS: ☐ REQUIRED DETAILS~~
46 ~~HEATER: ☐ REQUIRED DETAILS~~
47 REMARKS: SEE 204446 SHTS 3 4 5 6

TESTING & SHIPPING DETAILS

48 SHIPPING: ☒ DOMESTIC ☐ OVERSEAS PACKING REQUIREMENTS
49
50 ☐ SHIPPED AS ONE PANEL ☒ DIVIDED FOR SHIPPING SHIPPING DIVISION
51 MAX UNCRATED SIZE PER #53
52 ASSEMBLED WEIGHT ______ KG.(LB) SHIPPING WEIGHT ______ KG.(LB)
53 DIMENSIONS: L 72 W 36 H 100 (IN)
54 TESTING: SPECIAL REQUIREMENTS 1) POINT-TO-POINT WIRING.
55 2) AC [illegible] CHECKS 3) PANEL INSPECTION

56 REMARKS:

FOR ADDITIONAL PANEL CONSTRUCTION AND WIRING REQUIREMENTS FOR PANEL C, SEE SPEC SHEET No 204446 - SHEETS 3, 4, 5, 6 FOR PANEL A.

[100,102]ISS41 .CHT

REV. NO.	DATE	DESCRIPTION	DES. BY	APP. BY	MECH./PROCESS	PIPING
0	[illegible]	PH 1 FINAL	NF	[illegible]		

MANUFACTURER'S DRAWING NO.:

NOTES:

DESIGNED BY / DATE	APPROVED BY / DATE	SPEC. SHEET NO.
FERGOL / 09-36		204449 SH 2 OF 2

Monenco

HAND SWITCH SPECIFICATION SHEET

CLIENT: ENERGY, MINES & RESOURCES CANADA.	
PROJECT: PP3 INSTR. PHASE I	WORK ORDER: DSS 8279-3
PURCHASE ORDER NO.:	CONTRACT NO.: 03SQ 23440 59152
SUPPLIER:	MANUFACTURER:

1. Tag No: ______
2. Service: TEMP CONTROLLER PANEL.
3. Panel Ref: PANEL C
4. Type: Mechanical ☒ Solid State ☐
5. Operator: Toggle ☐ Pushbotton ☐ Selector ☐ Key ☐ Paddle ☒ Rocker ☐ Slide ☐ Other ______
6. Action: Maintained ☒ Momentary ☐
7. Positions: Two ☒ Three ☐ Other ______
8. Mounting: Flush ☒ Surface ☐ Terminal Block ☐ Mosaic ☐
10. Contact Rating: 3 Amps 125 Volts 60 Hz
11. Load: Inductive ☐ Non Inductive ☒
12. Form: SPST ☐ SPDT ☒ DPDT ☐ Other: See 21
13. Terminations: Screw ☐ Solder ☐
14. Contacts: Silver ☒ Gold ☐ Other ______
15. Lights: Nonlighted ☐ Neon ☐ Incandescent ☐
16. Light Circuit: Integral ☐ Isolated ☐
17. Seal: NEMA 1 Oil Tight ☐
18. Manufacturer: MICROSWITCH.
19. Model No.: AML .23 [illegible]

20. Legend:

ON / OFF

21. Contact Block — N/A.

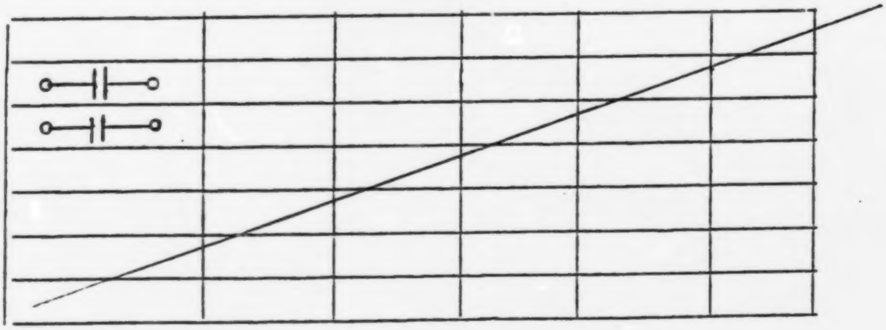

REV. NO.	DATE	DESCRIPTION	DES. BY	APP. BY	MECH./PROCESS	PIPING
[illegible]	[illegible]	1 FINAL	JF	[illegible]		

MANUFACTURER'S DRAWING NO.:

NOTES:
1. BILL OF MATERIAL B204477 ITEM. 3

DESIGNED BY / DATE	APPROVED BY / DATE	SPEC. SHEET NO.	REV.
PIERSOL / 09/86		204450	0

INDEX	DRAWING NO.	SHEET NO.	INDEX	DRAWING NO.	SHEET NO.
INDEX	204458		CONNECTION DIAGRAM	204453	
FRONT LAYOUT	204457				
ENGRAVING SCHEDULE	B204456	1	SCR PANEL D1 SPECIFICATION SHEET	204452	
	B204455	2			
MATERIAL LIST	B204454				

NOTES:

REV.	DATE	DESCRIPTION	BY	I/C	PIPING	MECH./PROC.	ELECT.	CIVIL	APPR.
01	09.86	PH. I FINAL	W.P						
0	20 06.86	PRELIMINARY	W.P						

APPROVALS

WO. DSS8279-3
DESIGNED: PIERSOL
DATE: JUNE 86
DRAWN:
DATE:
SUPV.:
DATE:
PASSED: Piersol
DATE: Sept 86
APPROVED:
DATE:

ENERGY, MINES and RESOURCES CANADA

COPROCESSING PILOT PLANT PP3

CONTROL PANEL INDEX SHEET
SCR PANEL D1

Monenco:

B204458 REGISTRY NO.

01 REV.

ISD003

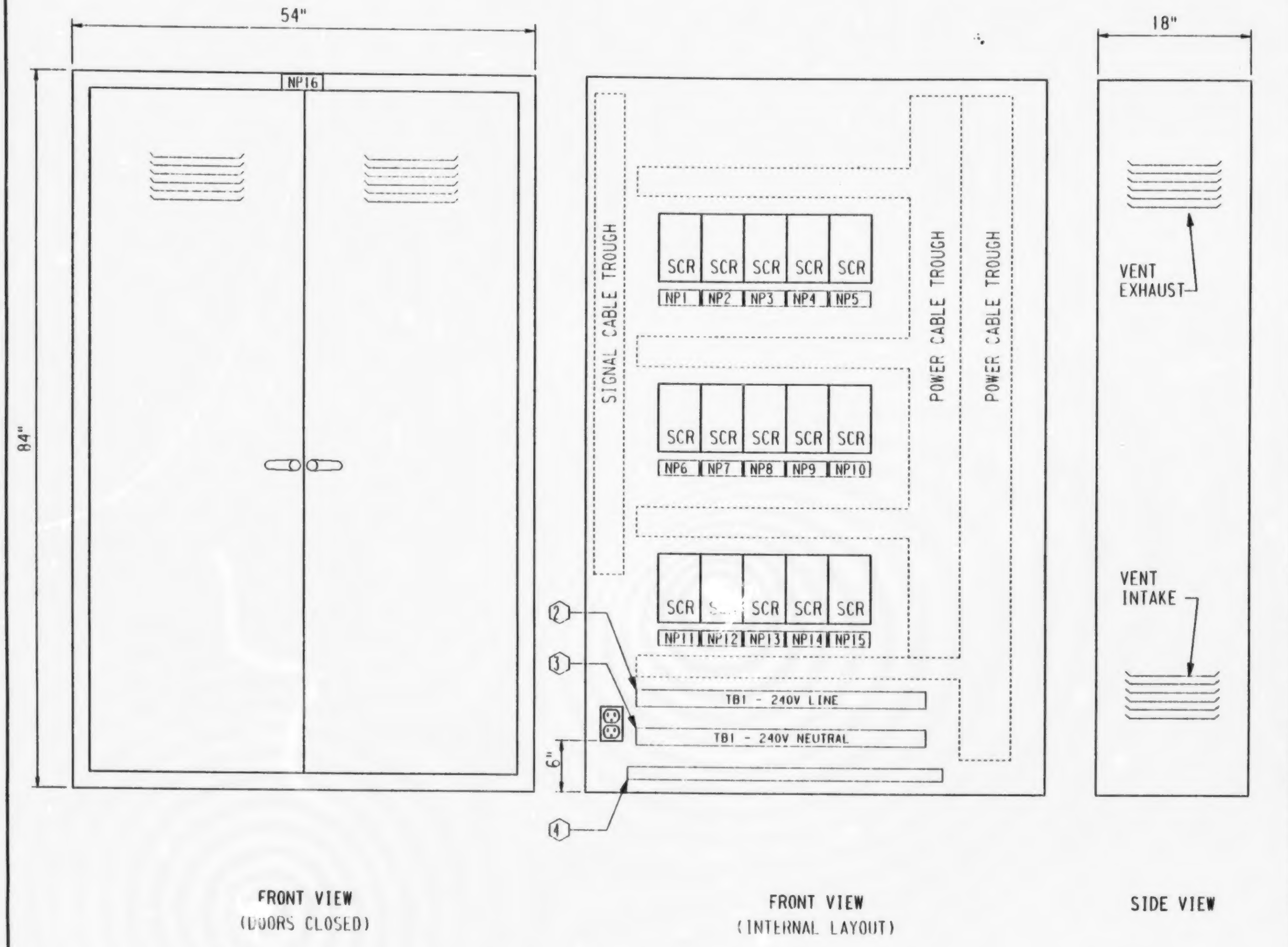

NOTES:

1. SEE SPEC. SHEET 204452 FOR PANEL CONSTRUCTION REQUIREMENTS.

REFERENCE DRAWINGS:

SEE INDEX SHEET B204458

REV	DATE	DESCRIPTION	CHK	MEC APP	EMR APP
01	09.86	PH. I FINAL	WP	[signature]	
00	18 06.86	PRELIMINARY	WP		

Energy, Mines and Resources Canada — Énergie, Mines et Ressources Canada

SCR PANEL D1
FRONT LAYOUT

EMR COPROCESSING PILOT PLANT
PP3

SCALE	1" = 1'-0"		
DRAWN	V.MUELLER	DATE	86.06.18
CHKD			REV
DESIGN	W.PIERSOL		01

Monenco Consultants Limited

WORK ORDER No. DSS 8279-3

REG. No. 204457

B

INST./EQUIP. TAG NO.	NAMEPLATE SIZE	ORIENTATION	LOCATION	ENGRAVING
NP1	SIZE 3		SEE 204457	02TY4005
NP2	SIZE 3		SEE 204457	02TY4007
NP3	SIZE 3		SEE 204457	02TY4009
NP4	SIZE 3		SEE 204457	02TY4011
NP5	SIZE 3		SEE 204457	02TY4013
NP6	SIZE 3		SEE 204457	03TY4009
NP7	SIZE 3		SEE 204457	03TY4010
NP8	SIZE 3		SEE 204457	03TY4011
NP9	SIZE 3		SEE 204457	03TY4012
NP10	SIZE 3		SEE 204457	03TY4013
NP11	SIZE 3		SEE 204457	03TY4014
NP12	SIZE 3		SEE 204457	03TY4015
NP13	SIZE 3		SEE 204457	03TY4016
NP14	SIZE 3		SEE 204457	03TY4100
NP15	SIZE 3		SEE 204457	03TY4101

NOTES: SEE INDEX SHT B204458

1. NAME PLATE TYPE: LAMACOID

LETTER SIZE: SEE SPEC

TITLE COLOUR: WHITE

BACKGROUND COLOUR: BLACK

REV.	DATE	DESCRIPTION	BY	I/C	PIPING	MECH./PROC.	ELECT.	CIVIL	APPR.
01	09.86	PH. 1 FINAL	C.P.						
0	20 06.86	PRELIMINARY	W.P.						

APPROVALS

WO. DSS8279-3

DESIGNED: PIERSOL
DATE: JUNE 86
DRAWN:
DATE:
SUPV.:
DATE:
PASSED: [signature] Sept 86
DATE:
APPROVED:
DATE:

ENERGY, MINES and RESOURCES CANADA

COPROCESSING PILOT PLANT PP3

CONTROL PANEL ENGRAVING SCHEDULE
SCR PANEL D1
SHT 1 OF 2

Monenco:

B204456 REGISTRY No.

01 REV.

ISD006

INST./EQUIP. TAG NO.	NAMEPLATE SIZE	ORIENTATION	LOCATION	ENGRAVING
NP16	SIZE 1		SEE 204457	PP3 SCR PANEL D1

NOTES: SEE INDEX SH B204458

1. NAME PLATE TYPE:
LETTER SIZE: SEE SHEET 1
TITLE COLOUR:
BACKGROUND COLOUR:

REV.	DATE	DESCRIPTION	BY	I/C	PIPING	MECH./PROC.	ELECT.	CIVIL	APPR.
01	09.86	PH. 1 FINAL	C.P	[signature]					
0	06.86	PRELIMINARY	W.P						

APPROVALS

WO. DSS8279-3
DESIGNED: PIERSOL
DATE: JUNE 86
DRAWN:
DATE:
SUPV.:
DATE:
PASSED: [signature]
DATE: Sept 86
APPROVED:
DATE:

ENERGY, MINES and RESOURCES CANADA

COPROCESSING PILOT PLANT PP3

CONTROL PANEL ENGRAVING SCHEDULE
SCR PANEL D1
SHT 2 OF 2

Monenco:

B204455
REGISTRY NO.

01
REV.

1	2	3	4	5	6	7	8	9	10	11	12	13	14
ITEM NO.	DESCRIPTION	TAG NO.	TYPE	MANUFAC-TURER	MODEL NO.	QUANTITY	MOUNTING LOCATION				SUPPLIED BY	INSTRUMENT SPEC. SHEET NO.	REMARKS
1	SCR POWER		240 VOLTS	HALMAR	LZFI	15	SEE				EMR		
	CONTROLLERS				2425		DWG 204457						
2	FUSE TYPE					15	SEE				PANEL		
	TERMINAL BLOCK						DWG 204457				VENDOR	204452	
3	NEUTRAL TERM					15	SEE				PANEL		
	BLOCK						DWG 204457				VENDOR	204452	
4	COPPER GROUND						SEE				PANEL		
	BUS						DWG 204457				VENDOR	204452	
5	VENT. FANS &					AS					PANEL		
	FILTERS					REQUIRED					VENDOR	204452	

NOTES:

1. SEE INDEX SHEET B204458

REV.	DATE	DESCRIPTION	BY	I/C	PIPING	MECH./PROC.	ELECT.	CIVIL	APPR.
01	09.86	PH. 1 FINAL	W.P	WB					
0	20 06.86	PRELIMINARY	W.P						

APPROVALS

WO. DSS8279-3
DESIGNED: PIERSOL
DATE: JUNE 86
DRAWN:
DATE:
SUPV.:
DATE:
PASSED: Piersol
DATE: Sept 86
APPROVED:
DATE:

ENERGY, MINES and RESOURCES CANADA

COPROCESSING PILOT PLANT PP3

CONTROL PANEL MATERIAL LIST
SCR PANEL D1

Monenco:

B204454 REGISTRY No.

01 REV.

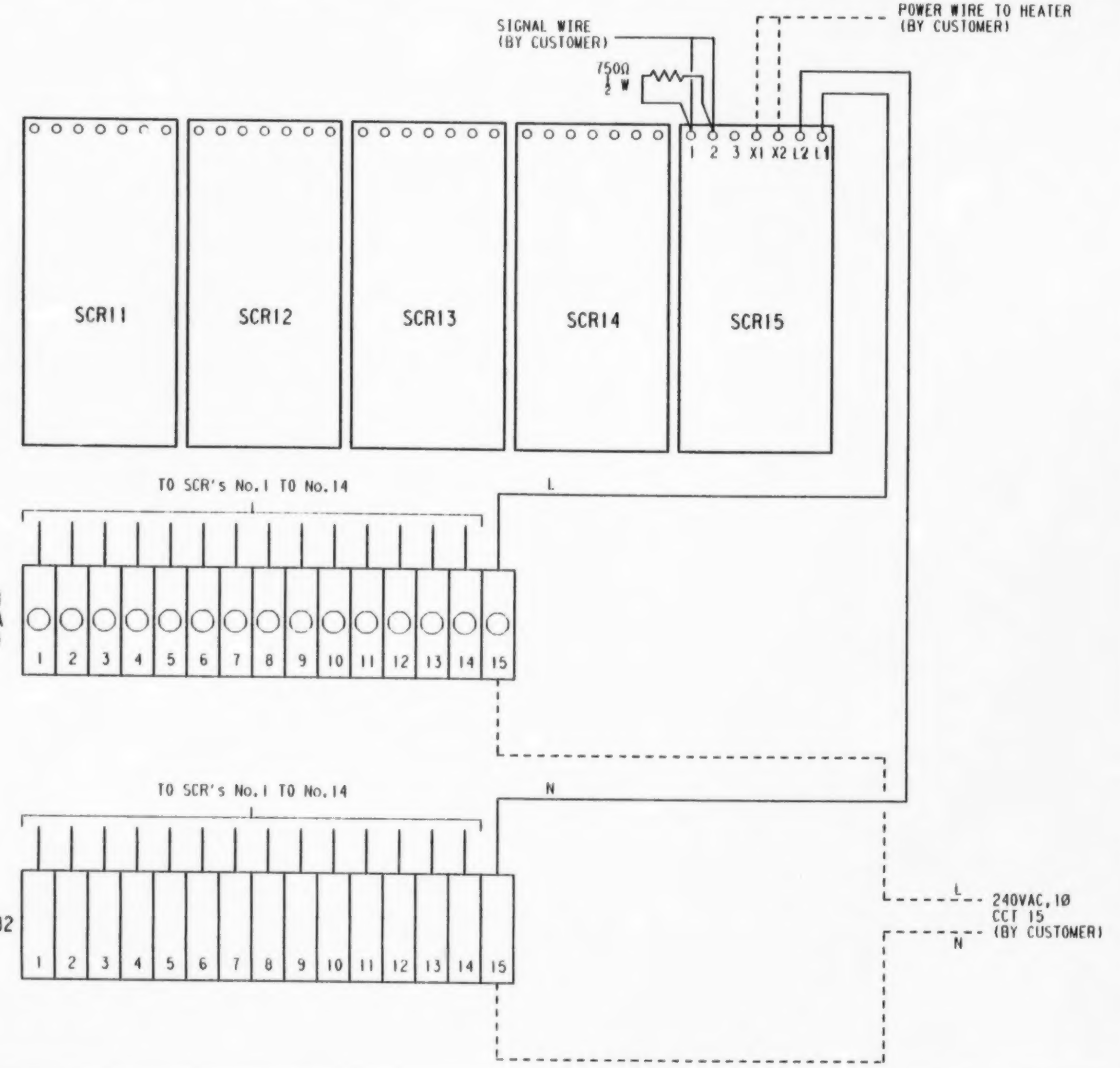

NOTES:

1. WIRING SHOWN FOR SCR No.15 ONLY. WIRING TO OTHER 14 SCR's IS SIMILAR.
2. SEE SPEC SHEET 204452 FOR WIRING REQUIREMENTS.
3. RECEPTACLE & FAN WIRING NOT SHOWN.

REFERENCE DRAWINGS:

SEE INDEX SHEET B204458

REV	DATE	DESCRIPTION	CHK	MEC APP	EMR APP
01	09.86 18	PH. 1 FINAL	WP	[signature]	
00	06.86	PRELIMINARY	WP		

Energy, Mines and Resources Canada   Énergie, Mines et Ressources Canada

CONNECTION DIAGRAM
SCR PANEL D1

EMR COPROCESSING PILOT PLANT
PP3

SCALE	NTS		
DRAWN	V.MUELLER	DATE	86.06.18
CHKD			REV
DESIGN	PIERSOI		01

Monenco Consultants Limited

WORK ORDER No. DSS 8279-3

REG. No. 204453

B

INDEX	DRAWING NO.	SHEET NO.	INDEX	DRAWING NO.	SHEET NO.
INDEX	204427		CONNECTION DIAGRAM	204423	
FRONT LAYOUT	204428				
ENGRAVING SCHEDULE	[illegible]		SCR PANEL [illegible]	[illegible]	
	[illegible]				
MATERIAL LIST	[illegible]				

NOTES:

REV.	DATE	DESCRIPTION	BY	I/C	PIPING	MECH. PROC.	ELECT.	CIVIL	APPR.
[illegible]	[illegible]	[illegible]	[illegible]						

WO. DSS8279-3

ENERGY, MINES and RESOURCES CANADA

COPROCESSING PILOT PLANT PP3

CONTROL PANEL INDEX SHEET
SCR PANEL D2

Monenco:

B204427 0

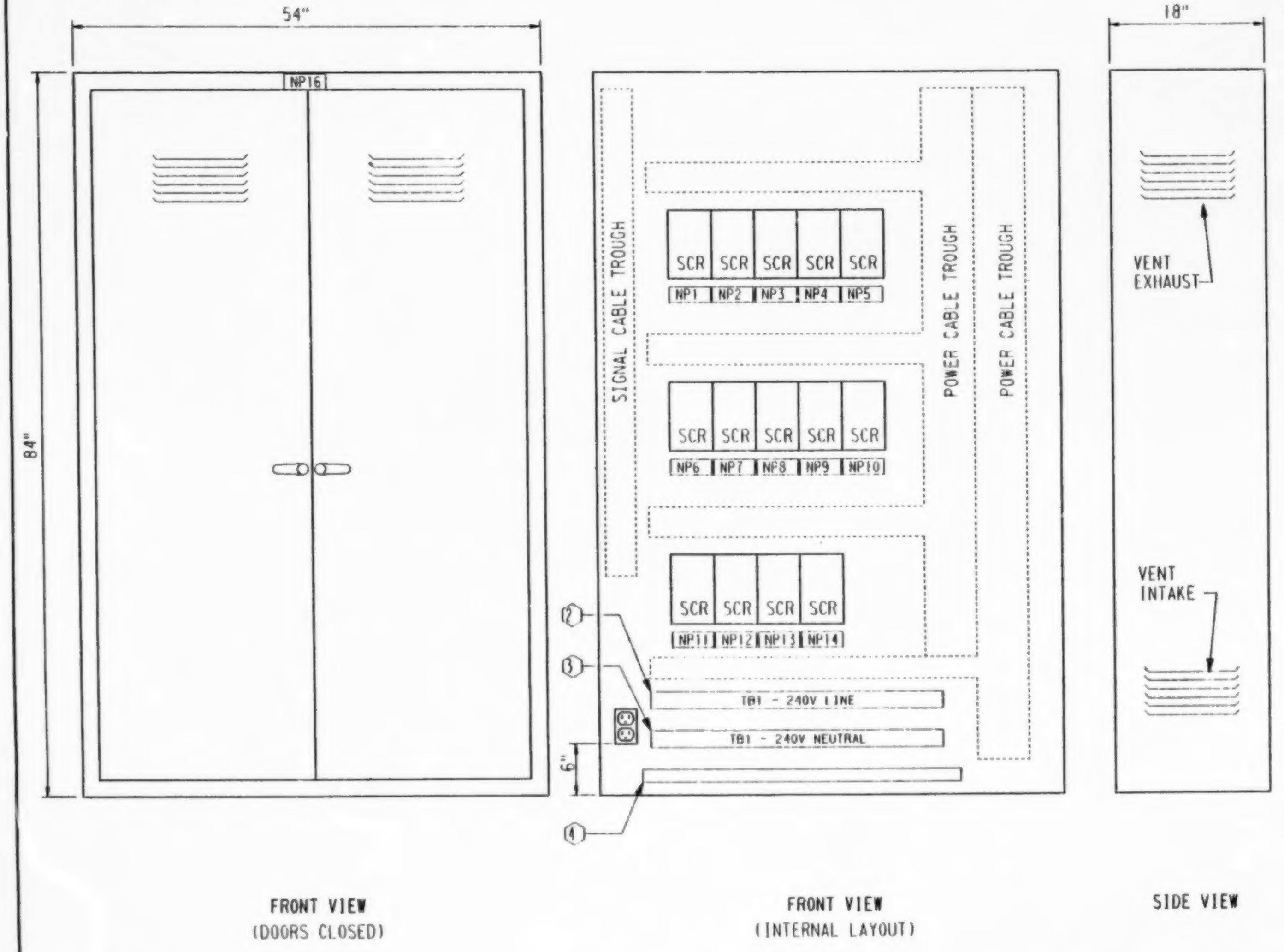

NOTES:
1. SEE SPEC. SHEET 204452 FOR PANEL CONSTRUCTION REQUIREMENTS.

REFERENCE DRAWINGS:
SEE INDEX SHEET B204427

REV	DATE	DESCRIPTION	CHK	MEC APP	EMR APP
00	09.86	PH. 1 FINAL	WP	[illegible]	

Energy, Mines and Resources Canada — Énergie, Mines et Ressources Canada

SCR PANEL D2
FRONT LAYOUT

EMR COPROCESSING PILOT PLANT
PP3

SCALE	1" = 1'-0"		
DRAWN	V.MUELLER	DATE	86.09.12
CHKD			REV
DESIGN	W.PIERSOL		00

Monenco Consultants Limited | WORK ORDER No. DSS 8279-3 | REG. No. 204428

B

INST./EQUIP. TAG NO.	NAMEPLATE SIZE	ORIENTATION	LOCATION	ENGRAVING							
								5			
NP1	SIZE 3		SEE 204428	0	3	T	Y	4	1	0	2
NP2	SIZE 3		SEE 204428	0	3	T	Y	4	1	0	3
NP3	SIZE 3		SEE 204428	0	3	T	Y	4	1	0	4
NP4	SIZE 3		SEE 204428	0	3	T	Y	4	1	0	5
NP5	SIZE 3		SEE 204428	0	3	T	Y	4	1	0	6
NP6	SIZE 3		SEE 204428	0	3	T	Y	4	1	0	7
NP7	SIZE 3		SEE 204428	0	3	T	Y	4	1	3	0
NP8	SIZE 3		SEE 204428	0	3	T	Y	4	1	3	1
NP9	SIZE 3		SEE 204428	0	3	T	Y	4	1	3	2
NP10	SIZE 3		SEE 204428	0	3	T	Y	4	1	3	3
NP11	SIZE 3		SEE 204428	0	4	T	Y	4	0	0	7
NP12	SIZE 3		SEE 204428	0	4	T	Y	4	0	0	8
NP13	SIZE 3		SEE 204428	0	4	T	Y	4	0	0	9
NP14	SIZE 3		SEE 204428	0	4	T	Y	4	0	1	0
NP15				N	O	T		U	S	E	D

NOTES: SEE INDEX SHT B204427

1. NAME PLATE TYPE: LAMACOID

LETTER SIZE: SEE SPEC

TITLE COLOUR: WHITE

BACKGROUND COLOUR: BLACK

REV.	DATE	DESCRIPTION	BY	I/C	PIPING	MECH./PROC.	ELECT.	CIVIL	APPR.
0	09.86	PH. 1 FINAL	W.P.	WS					

W0. DSS8279-3

DESIGNED: PIERSOL
DATE: JUNE 86
DRAWN:
DATE:
SUPV.:
DATE:
PASSED: Pierson
DATE: Sept 86
APPROVED:
DATE:

ENERGY, MINES and RESOURCES CANADA

COPROCESSING PILOT PLANT PP3

CONTROL PANEL ENGRAVING SCHEDULE
SCR PANEL D2
SHT 1 OF 2

Monenco:

B204425 REGISTRY NO.

00 REV.

INST./EQUIP. TAG NO.	NAMEPLATE SIZE	ORIENTATION	LOCATION	ENGRAVING
NP16	SIZE 1		SEE 204428	PP3 SCR PANEL D2

NOTES: SEE INDEX SH B204427

1. NAME PLATE TYPE: / LETTER SIZE: / TITLE COLOUR: / BACKGROUND COLOUR: — SEE SHEET 1

REV.	DATE	DESCRIPTION	BY	I/C	PIPING	MECH./PROC.	ELECT.	CIVIL	APPR.
0	09.86	PH. 1 FINAL	W.P.						

APPROVALS

WO. DSS8279-3
DESIGNED: PIERSOL
DATE: JUNE 86
DRAWN:
DATE:
SUPV.:
DATE:
PASSED: [signature]
DATE: Sept 86
APPROVED:
DATE:

ENERGY, MINES and RESOURCES CANADA

COPROCESSING PILOT PLANT PP3

CONTROL PANEL ENGRAVING SCHEDULE
SCR PANEL D2
SHT 2 OF 2

Monenco:

B204426 (REGISTRY NO.) REV. 0

1	2	3	4	5	6	7	8	9	10	11	12	13	14
ITEM NO.	DESCRIPTION	TAG NO.	TYPE	MANUFAC-TURER	MODEL NO.	QUANTITY	MOUNTING LOCATION				SUPPLIED BY	INSTRUMENT SPEC. SHEET NO.	REMARKS
1	SCR POWER CONTROLLERS		240 VOLTS	HALMAR	LZFI 2425	14	SEE DWG 204428				EMR		
2	FUSE TYPE TERMINAL BLOCK					15	SEE DWG 204428				PANEL VENDOR	204452	
3	NEUTRAL TERM BLOCK					15	SEE DWG 204428				PANEL VENDOR	204452	
4	COPPER GROUND BUS						SEE DWG 204428				PANEL VENDOR	204452	
5	VENT. FANS & FILTERS					AS REQUIRED					PANEL VENDOR	204452	

NOTES:

1. SEE INDEX SHEET B204427

REV.	DATE	DESCRIPTION	BY	I/C	PIPING	MECH./PROC.	ELECT.	CIVIL	APPR.
0	09.86	PH. I FINAL	W.P	WR					

APPROVALS

WO. DSS8279-3

DESIGNED: PIERSOL
DATE: JUNE 86
DRAWN:
DATE:
SUPV.:
DATE:
PASSED: Purwal
DATE: Sept 86
APPROVED:
DATE:

ENERGY, MINES and RESOURCES CANADA

COPROCESSING PILOT PLANT PP3

CONTROL PANEL MATERIAL LIST
SCR PANEL D2

Monenco:

B204424 REGISTRY No.

REV. 0

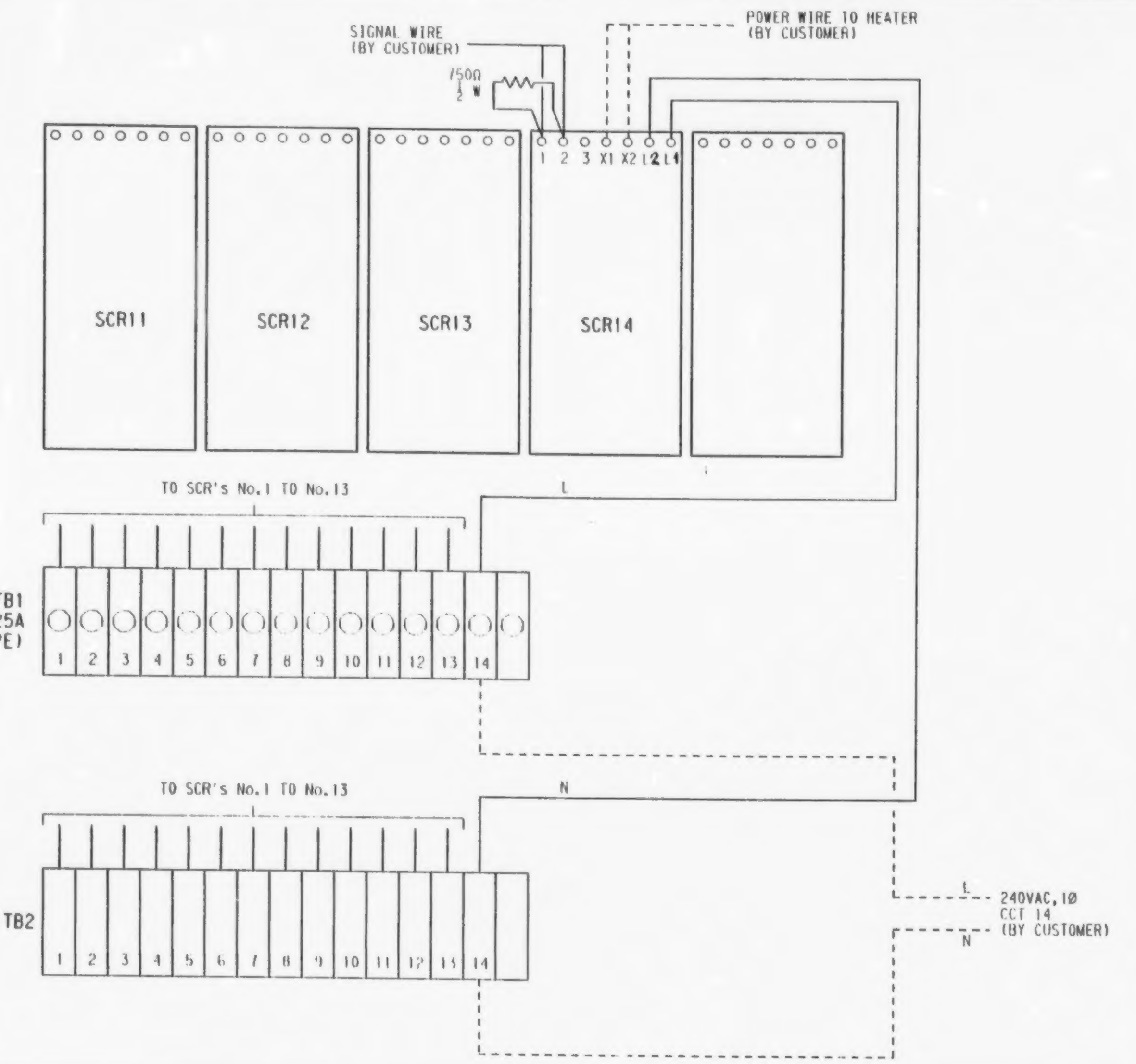

NOTES:

1. WIRING SHOWN FOR SCR No.14 ONLY. WIRING TO OTHER 13 SCR's IS SIMILAR.
2. SEE SPEC SHEET 204452 FOR WIRING REQUIREMENTS.
3. RECEPTACLE & FAN WIRING NOT SHOWN.

REFERENCE DRAWINGS:

SEE INDEX SHEET B204427

REV	DATE	DESCRIPTION	CHK	MEC APP	EMR APP
00	09.86	PH. 1 FINAL	WP		

Energy, Mines and Resources Canada — Énergie, Mines et Ressources Canada

CONNECTION DIAGRAM
SCR PANEL D2

EMR COPROCESSING PILOT PLANT
PP3

SCALE	NTS		
DRAWN		DATE	86.09.12
CHKD		REV	
DESIGN	PIERSOL		00

Monenco Consultants Limited

WORK ORDER No. DSS 8279-3

REG. No. 204423

B

Monenco

PANELS D1, D2

CONTROL PANELS SPECIFICATION SHEET

SHEET 1 OF 2

CLIENT: ENERGY, MINES & RESOURCES CANADA.	
PROJECT: PP3 INSTR. PHASE 1	WORK ORDER: D358279-3
PURCHASE ORDER NO.:	CONTRACT NO.: 03SQ23440-59182
SUPPLIER:	MANUFACTURER:

GENERAL

1 APPLICABLE TO: [X] PROPOSAL [ ] PURCHASE [ ] AS BUILT
2 SERVICE: PHASE-MAG SERIES EQUIPMENT NO. PANEL D1 / PANEL D2
3 PANEL TYPE: [ ] CONSOLE [ ] DESK [X] PANEL [ ] WALL
4 PANEL CLASSIFICATION: EEMAC 1
5 AREA CLASSIFICATION: [X] NON-HAZARDOUS [ ] HAZARDOUS CLASS ____ GROUP ____ DIV ____
6 ENVIRONMENT: AMBIENT TEMPERATURE: MIN ____ MAX ____ NORMAL 20 °C
7 HUMIDITY: MIN ____ MAX ____ NORMAL 60 %
8 ALTITUDE: 300 m (ft)
9 REMARKS:
10 HEAT DISSIPATION: ONE KW [ ] NATURAL VENTILATION [X] FORCED VENTILATION
11 DETAILS: VENTIL. SIZING BY PANEL FAB — C/W SWITCH
12 ADDITIONAL STANDARDS: C22.2
13 REMARKS: CSA CERTIFICATION REQUIRED.

CONSTRUCTION

14 MATERIAL: [X] STEEL [ ] OTHER
15 VIBRATION MOUNTINGS: [X] NO [ ] YES
16 GLASS FRONTED DOORS: [X] NO [ ] YES
17 ~~GRAPHIC MIMIC: TYPE: CONSTRUCTION:~~
18 ~~[ ] STATIC [ ] PAINTED [ ] LAMINATED PLASTIC [ ] BACKLIGHTED~~
19 ~~[ ] SEMI GRAPHIC [ ] MYLAR [ ] MODULAR~~ [ ] FRONT/REAR ENGRAVED
20 ~~[ ] FULL GRAPHIC [ ] OTHER~~
21 ~~MIMIC COLOURS:~~
22 ~~MIMIC SYMBOLS:~~
23 REMARKS:
24 PAINTING: INTERIOR: [X] WHITE SEMI GLOSS [ ] OTHER
25 EXTERIOR: COLOUR ANSI/ASA 61 GREY BAKED RECOATABLE ENAMEL
26 SPECIAL PAINT FINISH
27 REMARKS:

TUBING

28 ~~INSTRUMENT AIR SUPPLY:~~
29 ~~BULKHEAD FITTINGS: [ ] TOP [ ] BOTTOM~~
30 ~~TUBING MATERIALS: [ ] COPPER [ ] PVC COATED COPPER [ ] POLYETHYLENE~~
31 ~~AIR HEADER: [ ] REQUIRED [ ] NOT REQUIRED~~
32 ~~SIZE: [ ] 25MM [ ] 40MM~~ [ ] 50MM
33 ~~FILTER/REGULATOR: [ ] ONE [ ] TWO~~
34 ~~REGULATOR SETTING~~ RELIEF VALVE SETTING
35 ~~DIRECT CONNECTED GAUGES: [ ] YES [ ] NO TUBING MATERIALS:~~
36 ~~REMARKS:~~

REV. NO.	DATE	DESCRIPTION	DES. BY	APP. BY	MECH./PROCESS	PIPING	
0	03-86	FOR FINAL	MF	MK			

MANUFACTURER'S DRAWING NO.:

NOTES:

DESIGNED BY / DATE	APPROVED BY / DATE	SPEC. SHEET NO.:
PIERSOL / 03-86		204452 SH 1 OF 3

(100,102)IS540 .CHT

Monenco

CONTROL PANELS SPECIFICATION SHEET

SHEET 2 OF 2

CLIENT: ENERGY, MINES & RESOURCES CANADA.

PROJECT: PP3 INSTR. PHASE 1	WORK ORDER: DSS 8279-3
PURCHASE ORDER NO.:	CONTRACT NO.: 03SQ 23440 59182
SUPPLIER:	MANUFACTURER:

ELECTRICAL ARRANGEMENTS

37 POWER SUPPLIES: VOLTS/FREQ.: (1) [illegible] (2)____ (3)____ (4)____
38 USE
39 CABLE ENTRY: ☒ TOP ☐ BOTTOM
40 TERMINAL BLOCKS: TYPE: SEE DWG 20
41 INTERIOR LIGHTING: ☒ REQUIRED DETAILS [illegible]
42 CONVENIENCE OUTLETS: ☒ REQUIRED DETAILS____
43 WIRING IN HAZARDOUS AREAS: ☐ EXPLOSION PROOF ☐ PURGED ☐ INTRINSICALLY SAFE
44 DETAILS____
45 ~~TELEPHONE JACKS: ☐ REQUIRED DETAILS~~
46 ~~HEATER: ☐ REQUIRED DETAILS~~
47 REMARKS:

TESTING & SHIPPING DETAILS

48 SHIPPING: ☒ DOMESTIC ☐ OVERSEAS PACKING REQUIREMENTS____
49
50 ☒ SHIPPED AS ONE PANEL ☐ DIVIDED FOR SHIPPING SHIPPING DIVISION____
51
52 ASSEMBLED WEIGHT____ KG.(LB) SHIPPING WEIGHT____ KG.(LB)
53 DIMENSIONS: L____ W____ H____ MM(IN)
54 TESTING: SPECIAL REQUIREMENTS 1) POINT-TO-POINT WIRING
55 2) [illegible] CHECK 3) OWNER INSPECTION.

56 REMARKS:

[100,102]IS541 .CHT

REV. NO.	DATE	DESCRIPTION	DES. BY	APP. BY	MECH./PROCESS	PIPING
0	09/86	PH 1 FINAL	WP	[illegible]		

MANUFACTURER'S DRAWING NO.:

NOTES:

DESIGNED BY / DATE	APPROVED BY / DATE	SPEC. SHEET NO.:
PIERSON / 09-86		204452 SH 2 OF 3

Monenco

SPECIFICATION SHEET

CLIENT: ENERGY, MINES, + RESOURCES CAN.	
PROJECT: PP3 INSTR. PH I	WORK ORDER: DSS 8279-3
PURCHASE ORDER NO.:	CONTRACT NO.: 03SQ23440S9182
SUPPLIER:	MANUFACTURER:

SCR PANELS D1 AND D2 (cont'd)

CONSTRUCTION & WIRING

1. Fabricate top, bottom, sides, and back from 10 gauge min cold rolled steel. Doors to be 14 gauge minimum. Internal back plate to be 12 gauge minimum. Prefabricated Hammond enclosure is acceptable.

2. Provide lockable door handles with 3 point latching.

3. Provide removable cover plates for top entry of cables.

4. Wire-way to be PVC similar to Panduit Snap-in-Slot Design Type E with covers Type C.

5. Provide grounding bus with lug for No. 2 AWG incoming ground wire.

6. Wiring to be #14 AWG stranded copper type TEW rated at 600 volts, 105°C.
   Wire colours: 240VAC - black
   netrual - white
   ground - green
   Identify wires and terminals and SCRs.

REV. NO.	DATE	DESCRIPTION	DES. BY	APP. BY	MECH./PROCESS	PIPING
0	09/86	PH I FINAL	WP	GEP		

MANUFACTURER'S DRAWING NO.:

NOTES:

DESIGNED BY / DATE	APPROVED BY / DATE	SPEC. SHEET NO.:	REV.
PIERSOL / 09-86		204452 SHT 3 OF 3	0

[100, 102] ISS14 .CHT

INDEX	DRAWING NO.	SHEET NO.
INDEX	B204434	
FRONT LAYOUT	204435	
ENGRAVING SCHEDULE	B204436	1
	B204437	2
	B204419	3
MATERIAL LIST	B204438	

INDEX	DRAWING NO.	SHEET NO.
CONNECTION DIAGRAM	204439	1
	204440	2
INSTRUMENT SPEC. SHEETS-HAND SWITCH	204417	
HAND SWITCH	204442	
CONTROL PANEL S SPECIFICATION SHEETS	204443	

NOTES:

REV.	DATE	DESCRIPTION	BY	I/C	PIPING	MECH./PROC.	ELECT.	CIVIL	APPR.
1	26.09	PH. 1 FINAL		[illegible]					
0		PRELIMINARY							

APPROVALS

WO. DSS8279-3
DESIGNED: PIERSOL
DATE: JUNE 86
DRAWN:
DATE:
SUPV.:
DATE:
PASSED: [signature]
DATE: [illegible] 86
APPROVED:
DATE:

ENERGY, MINES and RESOURCES CANADA

COPROCESSING PILOT PLANT PP3

CONTROL PANEL INDEX SHEET
COAL SLURRY PANEL S

Monenco:

B204434 REGISTRY No.

0 1 REV.

INST./EQUIP. TAG NO.	NAMEPLATE SIZE	ORIENTATION	LOCATION	ENGRAVING COAL SLURRY
NP1	SIZE 1		SEE FRONT LAYOUT DWG 204435	PP3 S PANEL
NP2	SIZE 3		SEE FRONT LAYOUT DWG 204435	FEED LEFT TANK TOP ZONE 01TIC4004
NP3	SIZE 3		SEE FRONT LAYOUT DWG 204435	FEED LEFT TANK MID ZONE 01TIC4005
NP4	SIZE 3		SEE FRONT LAYOUT DWG 204435	FEED LEFT TANK BOT ZONE 01TIC4006
NP5	SIZE 3		SEE FRONT LAYOUT DWG 204435	FEED LEFT TANK DRN LINE 01TIC4007
NP6	SIZE 3		SEE FRONT LAYOUT DWG 204435	FEED LEFT RECY SUCT LINE 01TIC4008
NP7				NOT USED
NP8	SIZE 3		SEE FRONT LAYOUT DWG 204435	FEED LEFT BYPASS LINE 01TIC4010
NP9	SIZE 3		SEE FRONT LAYOUT DWG 204435	FEED RIGHT TANK TOP ZONE 01TIC4015
NP10	SIZE 3		SEE FRONT LAYOUT DWG 204435	FEED RIGHT TANK MID ZONE 01TIC4016
NP11	SIZE 3		SEE FRONT LAYOUT DWG 204435	FEED RIGHT TANK BOT ZONE 01TIC4017
NP12	SIZE 3		SEE FRONT LAYOUT DWG 204435	FEED RIGHT TANK DRN LINE 01TIC4018
NP13	SIZE 3		SEE FRONT LAYOUT DWG 204435	FEED RIGHT RECY SUC LINE 01TIC4019
NP14				NOT USED
NP15	SIZE 3		SEE FRONT LAYOUT DWG 204435	FEED RIGHT BYPASS LINE 01TIC4021

NOTES: SEE INDEX B204434

1. NAME PLATE TYPE: LAMACOID

LETTER SIZE: SIZE 1,3. SEE SPEC

TITLE COLOUR: WHITE

BACKGROUND COLOUR: BLACK

REV.	DATE	DESCRIPTION	BY	I/C	PIPING	MECH./PROC.	ELECT.	CIVIL	APPR.
1	86.09	PH.1 FINAL	WP	[illegible]					
0		PRELIMINARY							

APPROVALS

WO. DSS8279-3

DESIGNED: PIERSOL
DATE: JUNE 86
DRAWN:
DATE:
SUPV.:
DATE:
PASSED: [signature]
DATE: Sept 86
APPROVED:
DATE:

ENERGY, MINES and RESOURCES CANADA

COPROCESSING PILOT PLANT PP3

CONTROL PANEL ENGRAVING SCHEDULE
COAL SLURRY PANEL S
SHT 1 OF 3

Monenco:

B204436 REGISTRY No.

01 REV.

INST./EQUIP. TAG NO.	NAMEPLATE SIZE	ORIENTATION	LOCATION	ENGRAVING
NP16	SIZE 3		SEE FRONT LAYOUT DWG 204435	FEED RECY DRN DRUM LINE 01TIC4023
NP17	SIZE 3		SEE FRONT LAYOUT DWG 204435	FEED RECY TO SYSTEM 01TIC4024
NP18	SIZE 3		SEE FRONT LAYOUT DWG 204435	FEED RECY FROM SYSTEM 01TIC4025
NP19	SIZE 3		SEE FRONT LAYOUT DWG 204435	FEED RECY L EMERG BYPASS 01TIC4026
NP20	SIZE 3		SEE FRONT LAYOUT DWG 204435	FEED RECY R EMERG BYPASS 01TIC4032
NP21	SIZE 3		SEE FRONT LAYOUT DWG 204435	FEED RECY TRANSFER 01TIC4033
NP22	SIZE 3		SEE FRONT LAYOUT DWG 204435	FEED RECY R OUTLET 01TIC4034
NP23	SIZE 3		SEE FRONT LAYOUT DWG 204435	FEED RECY R RETURN 01TIC4035
NP24	SIZE 3		SEE FRONT LAYOUT DWG 204435	01SC0003
NP25	SIZE 3		SEE FRONT LAYOUT DWG 204435	01SC0001
NP26	SIZE 3		SEE FRONT LAYOUT DWG 204435	13WI0001
NP27	SIZE 3		SEE FRONT LAYOUT DWG 204435	13LAL0003
NP28	SIZE 3		SEE FRONT LAYOUT DWG 204435	13LAH0004
NP29	SIZE 3		SEE FRONT LAYOUT DWG 204435	TOLERANCE '+' 13L0006
NP30	SIZE 3		SEE FRONT LAYOUT DWG 204435	TOLERANCE '-' 13L0005

NOTES: SEE INDEX B204434

1. NAME PLATE TYPE:
LETTER SIZE: SEE SHT 1
TITLE COLOUR:
BACKGROUND COLOUR:

REV.	DATE	DESCRIPTION	BY	I/C	PIPING	MECH./PROC.	ELECT.	CIVIL	APPR.
1	86.9	PH. 1 FINAL	WP						
0		PRELIMINARY							

WO. DSS8279-3
DESIGNED: PIERSOL DATE: JUNE 86
DRAWN: DATE:
SUPV.: DATE:
PASSED: DATE: Sept 86
APPROVED: DATE:

ENERGY, MINES and RESOURCES CANADA

COPROCESSING PILOT PLANT PP3

CONTROL PANEL ENGRAVING SCHEDULE
COAL SLURRY PANEL S
SHT 2 OF 3

Monenco:

B204437 REGISTRY NO. — REV. 01

INST./EQUIP. TAG NO.	NAMEPLATE SIZE	ORIENTATION	LOCATION	ENGRAVING
NP31	SIZE 3		SEE FRONT LAYOUT DWG 204435	F U N C T I O N 1 1 3 L 0 0 0 1
NP32	SIZE 3		SEE FRONT LAYOUT DWG 204435	E M E R G E N C Y S H U T O F F 1 3 H S 0 0 0 7 / A
NP33	SIZE 3		SEE FRONT LAYOUT DWG 204435	1 3 H S 0 0 0 4
NP34	SIZE 3		SEE FRONT LAYOUT DWG 204435	1 3 H S 0 0 0 3
NP35	SIZE 3		SEE FRONT LAYOUT DWG 204435	1 3 H S 0 0 0 2
NP36	SIZE 3		SEE FRONT LAYOUT DWG 204435	1 3 H S 0 0 0 1
NP37	SIZE 3		SEE FRONT LAYOUT DWG 204435	0 1 H S 0 0 1 6 / B
NP38	SIZE 3		SEE FRONT LAYOUT DWG 204435	0 1 H S 0 0 0 6 / B
NP39	SIZE 3		SEE FRONT LAYOUT DWG 204435	0 1 H S 0 0 1 4 / A
NP40	SIZE 3		SEE FRONT LAYOUT DWG 204435	0 1 H S 0 0 0 3 / A

NOTES: SEE INDEX B204434

1. NAME PLATE TYPE:
LETTER SIZE: SEE SHEET 1
TITLE COLOUR:
BACKGROUND COLOUR:

REV.	DATE	DESCRIPTION	BY	I/C	PIPING	MECH./PROC.	ELECT.	CIVIL	APPR.
0	86.9	PRL FINAL	WP	[illegible]					

APPROVALS

WO. DSS8279-3
DESIGNED: PIERSOL
DATE: JUN 86
DRAWN:
DATE:
SUPV.:
DATE:
PASSED: Piersol
DATE: Sept 86
APPROVED:
DATE:

ENERGY, MINES and RESOURCES CANADA

COPROCESSING PILOT PLANT PP3

CONTROL PANEL ENGRAVING SCHEDULE
COAL SLUURY PANEL S
SHT 3 OF 3

Monenco:

B204419 REGISTRY NO.

0 REV.

1	2	3	4	5	6	7	8	9	10	11	12	13	14
ITEM NO.	DESCRIPTION	TAG NO.	TYPE	MANUFAC-TURER	MODEL NO.	QUANTITY	MOUNTING LOCATION				SUPPLIED BY	INSTRUMENT SPEC. SHEET NO.	REMARKS
1	TEMPERATURE CONTROLLERS	SEE DWG. 204439		ATHENA	SERIES 2000	20	PANEL FRONT				EMR		
2	ON-OFF POWER SWITCH	204439 204440		HONEYWELL MICROSWITCH	AML 23 OR EQUAL	20	PANEL FRONT				PANEL VENDOR	204442	
3	DATA LOGGER			KAYE	DIGI LINK IV	1	PANEL FRONT				EMR		
4	WEIGHT DISPLAY	13WI0001		TOLEDO SCALES	8132	1	PANEL FRONT				EMR		
5	SPEED CONTROLLER			GENERAL ELECTRIC	STATOTROL JR	2	PANEL FRONT				EMR		
6													
7	HANDSWITCH	SEE DWG. 204440				12	PANEL FRONT				PANEL VENDOR	204417	
8	SOLID STATE RELAY					40	PANEL REAR				EMR		
9	PROGRAMMABLE CONTROLLER			HONEYWELL	IPC620-10	1	PANEL REAR				EMR		
11	INDICATION LIGHT	SEE DWG. 204440		ALLAN-BRADLEY	800H-QP10 OR EQUIV.	5	PANEL FRONT				PANEL VENDOR		3 AMBER CAPS AND 2 RED CAPS.
12	PUSH BUTTON SWITCH	13HS0007/A		ALLAN-BRADLEY	800H-FPX6A1 OR EQUIV.	1	PANEL FRONT				PANEL VENDOR		CONNECT TO "N.O. AT OUT POSITION " CONTACT
13	PANEL VENTILATION FANS & LOUVRES					AS REQ'D.					PANEL VENDOR		

NOTES:

1. SEE INDEX B204434

REV.	DATE	DESCRIPTION	BY	I/C	PIPING	MECH./PROC.	ELECT.	CIVIL	APPR.
1	86.9	PH. I FINAL	WP	JAG					
0		PRELIMINARY							

APPROVALS

WO. DSS8279-3

DESIGNED: PIERSOL
DATE: JUNE 86
DRAWN:
DATE:
SUPV.:
DATE:
PASSED: Piersol
DATE: Sept 86
APPROVED:
DATE:

ENERGY, MINES and RESOURCES CANADA

CONTROL PANEL MATERIAL LIST
COAL SLURRY PANEL S

Monenco:

B204438
REGISTRY No.

1
REV.

Monenco

PANEL S

CONTROL PANELS SPECIFICATION SHEET

SHEET 1 OF 2

CLIENT: ENERGY, MINES & RESOURCES CANADA	
PROJECT: PP3 INSTR. PHASE 1	WORK ORDER: DSS8279-3
PURCHASE ORDER NO.:	CONTRACT NO.: 03SQ23440-59182
SUPPLIER:	MANUFACTURER:

GENERAL

1 APPLICABLE TO: ☒ PROPOSAL ☐ PURCHASE ☐ AS BUILT

2 SERVICE: COAL SLURRY CONTROL EQUIPMENT NO. PANEL S

3 PANEL TYPE: ☐ CONSOLE ☐ DESK ☒ PANEL ☐ WALL

4 PANEL CLASSIFICATION: EEMAC 1

5 AREA CLASSIFICATION: ☒ NON-HAZARDOUS ☐ HAZARDOUS CLASS ____ GROUP ____ DIV ____

6 ENVIRONMENT: AMBIENT TEMPERATURE: MIN ____ MAX ____ NORMAL 20 °C

7 HUMIDITY: MIN ____ MAX ____ NORMAL 40 %

8 ALTITUDE: 300 m(ft)

9 REMARKS:

10 HEAT DISSIPATION: ____ KW ☐ NATURAL VENTILATION ☒ FORCED VENTILATION

11 DETAILS: SIZING BY PANEL FABRICATOR – C/W SWITCH

12 ADDITIONAL STANDARDS: CSA Z299.4

13 REMARKS: CSA CERTIFICATION REQUIRED

CONSTRUCTION

14 MATERIAL: ☒ STEEL ☐ OTHER

15 VIBRATION MOUNTINGS: ☒ NO ☐ YES

16 GLASS FRONTED DOORS: ☒ NO ☐ YES

17 ~~GRAPHIC MIMIC:~~ TYPE: CONSTRUCTION:

18 NOT ~~☐ STATIC~~ ~~☐ PAINTED~~ ~~☐ LAMINATED PLASTIC~~ ~~☐ BACKLIGHTED~~

19 APPLICABLE ~~☐ SEMI-GRAPHIC~~ ~~☐ MYLAR~~ ~~☐ MODULAR~~ ~~☐ FRONT/REAR-ENGRAVED~~

20 ~~☐ FULL-GRAPHIC~~ ~~☐ OTHER~~

21 ~~MIMIC COLOURS:~~

22 ~~MIMIC SYMBOLS:~~

23 REMARKS:

24 PAINTING: INTERIOR: ☒ WHITE SEMI GLOSS ☐ OTHER

25 EXTERIOR: COLOUR ANSI/ASA 61 GREY BAKED RECOATABLE ENAMEL

26 SPECIAL PAINT FINISH

27 REMARKS:

TUBING

NOT APPLICABLE

28 ~~INSTRUMENT AIR SUPPLY:~~

29 ~~BULKHEAD FITTINGS: ☐ TOP ☐ BOTTOM~~

30 ~~TUBING MATERIALS: ☐ COPPER ☐ PVC COATED COPPER ☐ POLYETHYLENE~~

31 ~~AIR HEADER: ☐ REQUIRED ☐ NOT REQUIRED~~

32 ~~SIZE: ☐ 25MM ☐ 40MM ☐ 50MM~~

33 ~~FILTER/REGULATOR: ☐ ONE ☐ TWO~~

34 ~~REGULATOR SETTING ____ RELIEF VALVE SETTING~~

35 ~~DIRECT CONNECTED GAUGES: ☐ YES ☐ NO TUBING MATERIALS~~

36 REMARKS:

(100,102)ISS40 .CHT

REV. NO.	DATE	DESCRIPTION	DES. BY	APP. BY	MECH./PROCESS	PIPING
	09/86	PH 1 FINAL	WP	[illegible]		

MANUFACTURER'S DRAWING NO.:

NOTES:

DESIGNED BY / DATE	APPROVED BY / DATE	SPEC. SHEET NO.:
PIERSOL 09/86		204443 SH 1 OF 2

S

Monenco

PANEL S

CONTROL PANELS
SPECIFICATION SHEET
SHEET 2 OF 2

CLIENT: ENERGY, MINES & RESOURCES CANADA.

PROJECT: PD3 INSTR. PHASE 1

WORK ORDER: DSS8279-3

PURCHASE ORDER NO.:

CONTRACT NO.: 03SQ23440 59182

SUPPLIER:

MANUFACTURER:

ELECTRICAL ARRANGEMENTS

37 POWER SUPPLIES: VOLTS/FREQ.: (1) [illegible] (2) ____ (3) ____ (4) ____
38 USE
39 CABLE ENTRY: ☒ TOP ☐ BOTTOM
40 TERMINAL BLOCKS: TYPE: WEIDMULLER [illegible] ETC.
41 INTERIOR LIGHTING: ☒ REQUIRED DETAILS FLUORESCENT - [illegible] SWITCH
42 CONVENIENCE OUTLETS: ☒ REQUIRED DETAILS SEE DWGS.
43 WIRING IN HAZARDOUS AREAS: ☐ EXPLOSION PROOF ☐ PURGED ☐ INTRINSICALLY SAFE
44 DETAILS
45 ~~TELEPHONE JACKS: ☐ REQUIRED DETAILS:~~
46 ~~HEATER: ☐ REQUIRED DETAILS:~~
47 REMARKS:

TESTING & SHIPPING DETAILS

48 SHIPPING: ☒ DOMESTIC ☐ OVERSEAS PACKING REQUIREMENTS
49
50 ☐ SHIPPED AS ONE PANEL ☒ DIVIDED FOR SHIPPING SHIPPING DIVISION
51 MAX SECTION SIZE [illegible]
52 ASSEMBLED WEIGHT ____ KG. (LB) SHIPPING WEIGHT ____ KG. (LB)
53 DIMENSIONS: L 30" W 24" H 100 IN)
54 TESTING: SPECIAL REQUIREMENTS 1) POINT-TO-POINT WIRING
55 2) AC POWER CHECK 3) OWNER INSPECTION

56 REMARKS:

FOR ADDITIONAL PANEL CONSTRUCTION AND WIRING REQUIREMENTS FOR PANEL S, SEE SPEC SHEET No 204446 - SHEETS 3, 4, 5, 6 FOR PANEL A1.

[100, 102] ISS41 .CHT

REV. NO.	DATE	DESCRIPTION	DES. BY	APP. BY	MECH./PROCESS	PIPING
0	09/86	[illegible] FINAL	DP	[illegible]		

MANUFACTURER'S DRAWING NO.:

NOTES:

DESIGNED BY / DATE	APPROVED BY / DATE	SPEC. SHEET NO.:
PIERSOL 09/86		204443 SH 2 OF 2

Monenco

HAND SWITCH
SPECIFICATION SHEET

CLIENT: ENERGY, MINES & RESOURCES CANADA	
PROJECT: PP3 INSTR. PHASE I	WORK ORDER: DSS8279-3
PURCHASE ORDER NO.:	CONTRACT NO.: 03SQ23440 59182
SUPPLIER:	MANUFACTURER:

1. Tag No: SEE LIST - SH 2.
2. Service: TEMP CONTROLLER POWER.
3. Panel Ref: PANEL S
4. Type: Mechanical ☒ Solid State ☐
5. Operator: Toggle ☐ Pushbotton ☐ Selector ☐ Key ☐ Paddle ☒ Rocker ☐ Slide ☐ Other ______
6. Action: Maintained ☒ Momentary ☐
7. Positions: Two ☒ Three ☐ Other ______
8. Mounting: Flush ☒ Surface ☐ Terminal Block ☐ Mosaic ☐
10. Contact Rating: 5 Amps 125 Volts 60 Hz
11. Load: Inductive ☐ Non Inductive ☒
12. Form: SPST ☐ SPDT ☒ DPDT ☐ Other: See 21
13. Terminations: Screw ☐ Solder ☐
14. Contacts: Silver ☒ Gold ☐ Other ______
15. Lights: Nonlighted ☒ Neon ☐ Incandescent ☐
16. Light Circuit: Integral ☐ Isolated ☐
17. Seal: NEMA 1 Oil Tight ☐
18. Manufacturer: MICRO SWITCH.
19. Model No.: AML23 OR EQUAL

20. Legend: ON/OFF.

21. Contact Block – N/A.

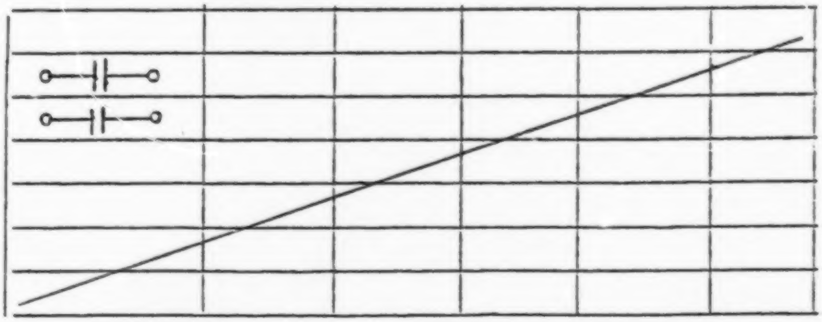

REV. NO.	DATE	DESCRIPTION	DES. BY	APP. BY	MECH./PROCESS	PIPING
	10.84	FOR FINAL				

MANUFACTURER'S DRAWING NO.:

NOTES:
1. BILL OF MATERIAL B204433 ITEM 2

DESIGNED BY / DATE	APPROVED BY / DATE	SPEC. SHEET NO.	REV.
PIERCE / 10.84		204442 SH 1 OF 2	00

[100, 102] ISS13 .CHT

Monenco

SPECIFICATION SHEET

CLIENT: ENERGY, MINES, + RESOURCES CAN.	
PROJECT: PP 3 INSTR. PH 1	WORK ORDER: DSS 8279-3
PURCHASE ORDER NO.:	CONTRACT NO.: 02SQ23440 59182
SUPPLIER:	MANUFACTURER:

HANDSWITCH LIST - PANEL S

ITEM	ASSOCIATED TEMP. CONTROLLER
1	01TIC4004
2	01TIC4005
3	01TIC4006
4	01TIC4007
5	01TIC4008
6	01TIC4010
7	01TIC4015
8	01TIC4016
9	01TIC4017
10	01TIC4018
11	01TIC4019
12	01TIC4021
13	01TIC4023
14	01TIC4024
15	01TIC4025
16	01TIC4026
17	01TIC4032
18	01TIC4033
19	01TIC4034
20	01TIC4035

[100,102]ISSI4 .CHT

REV. NO.	DATE	DESCRIPTION	DES. BY	APP. BY	MECH./PROCESS	PIPING
3	03-28	PH 1 FINAL	WF	[illegible]		

MANUFACTURER'S DRAWING NO.:

NOTES:

DESIGNED BY / DATE	APPROVED BY / DATE	SPEC. SHEET NO.:	REV.
PIERSOL / 03-80		204442 SHT 2 OF 2	0 C

PANEL S

Monenco

HAND SWITCH SPECIFICATION SHEET

CLIENT: ENERGY, MINES & RESOURCES CANADA.	
PROJECT: PP3 INSTR. PHASE I	WORK ORDER: DSS 8270-3
PURCHASE ORDER NO.:	CONTRACT NO.: 03SQ 23440 59182
SUPPLIER:	MANUFACTURER:

1. Tag No: SEE BELOW.
2. Service: MISCELLANEOUS
3. Panel Ref: PANEL S
4. Type: Mechanical ☒ Solid State ☐
5. Operator: Toggle ☐ Pushbotton ☐ Selector ☒ Key ☐ Paddle ☐ Rocker ☐ Slide ☐ Other ______
6. Action: Maintained ☒ Momentary ☐
7. Positions: Two ☒ Three ☐ Other ______
8. Mounting: Flush ☒ Surface ☐ Terminal Block ☐ Mosaic ☐
10. Contact Rating: 5 Amps 125 Volts 60 Hz
11. Load: Inductive ☐ Non Inductive ☒
12. Form: SPST ☐ SPDT ☐ DPDT ☐ Other: See 21
13. Terminations: Screw ☐ Solder ☐
14. Contacts: Silver ☐ Gold ☐ Other ______
15. Lights: Nonlighted ☒ Neon ☐ Incandescent ☐
16. Light Circuit: Integral ☐ Isolated ☐
17. Seal: NEMA 1 Oil Tight ☐
18. Manufacturer: TO BE SELECTED BY PANEL FABRICATOR
19. Model No.:

20. Legend:

START STOP. *

ON / OFF

LOCAL/REMOTE +

21. Contact Block — N/A.

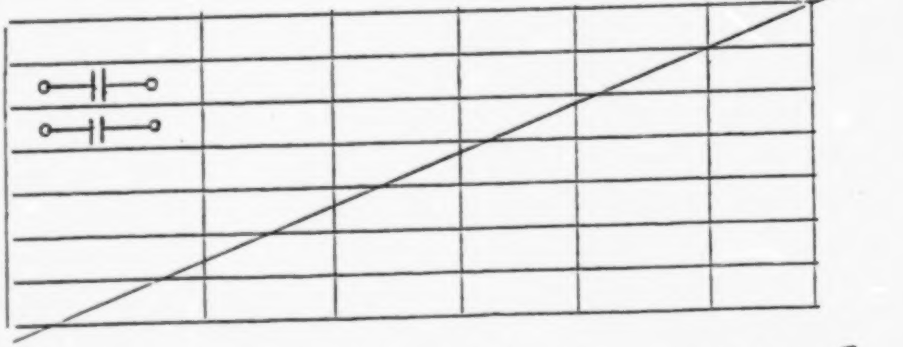

BILL OF MATERIAL B 204432 ITEM 2

MANUFACTURER'S DRAWING NO.:

NOTES:

01 HS0003/A *
01 HS0014/A *
01 HS0008/B *
01 HS0016/B *
13 HS0001 +
13 HS0001B
13 HS0002 +
13 HS0002B
13 HS0003 +
13 HS0003/B
13 HS0004 +
13 HS0004B

REV. NO.	DATE	DESCRIPTION	DES. BY	APP. BY	MECH./PROCESS	PIPING
[illegible]	09-26	FOR FINAL	[illegible]	[illegible]		

DESIGNED BY / DATE	APPROVED BY / DATE	SPEC. SHEET NO.:	REV.
PIERSOL / 09-86		204417	0 0

TOP COVER VIEW

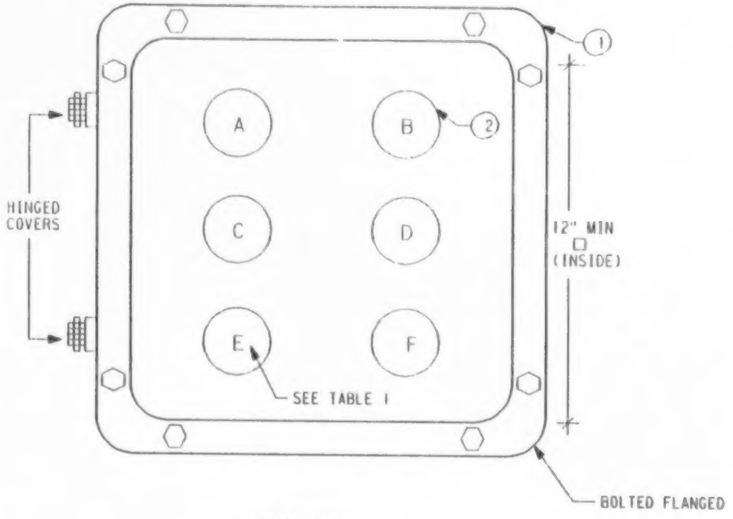

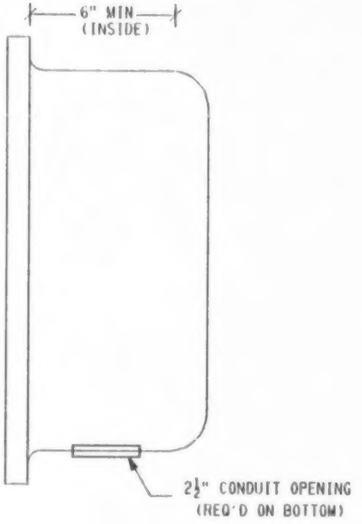

INSIDE VIEW
(COVER REMOVED)

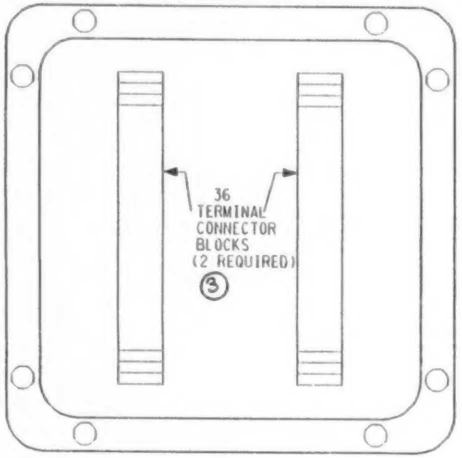

TABLE 1

SWITCH	JUNCTION BOX	
	ISL	ISR
A	01HS0005/A	01HS0015/A
B	01HS0007/A	01HS0017/A
C	01HS0008/A	01HS0018/A
D	01HS0009/A	01HS0019/A
E	01HS0010/A	01HS0020/A
F	13HS0007	——

BILL OF MATERIAL

1. CROUSE -HINDS EJB121206 OR EQUIVALENT
2. CROUSE-HINDS EMPS079, THREE POSITION SELECTOR SWITCH(W/SPECIAL DIAGRAM SHOWN ON DWG. 204130) OR EQUIV.
3. WEIDMULLER SAKGN OR EQUAL

NOTES :

1. CLASSIFICATION : CEC, CLASS II, GROUPS E, F, G.
2. 115VAC POWER SUPPLY NEEDED AT JUNCTION BOX.

REV	DATE	DESCRIPTION	CHK	MEC APP	EMR APP
00	86.09	PH. 1 FINAL	CP	WD	

Energy, Mines and Resources Canada — Énergie, Mines et Ressources Canada

COAL SLURRY JUNCTION BOX
ISL & ISR
BASIC LAYOUT

EMR COPROCESSING PILOT PLANT
PP3

DRAWN CAD DATE 86.09.12
CHKD REV
DESIGN 00

LOOP

B

Monenco Consultants Limited

WORK ORDER No. DSS 8279-3

REG. No. 204310

MAPS NOT

FILMED

CARTES

OMISES